THE

HUMBER

SUPER SNIPE

WORKSHOP MANUAL

A PRODUCT OF THE ROOTES GROUP

5th re-issue

THE NEW
HUMBER
SUPER SNIPE

SERIES I to V
AND
IMPERIAL

WORKSHOP MANUAL

Issued by
ROOTES SERVICE DIVISION . COVENTRY . ENGLAND

World Exporters
ROOTES LIMITED PICCADILLY LONDON ENGLAND

Publication No. W.S.M. 118
Part No. 6601140

PRINTED IN ENGLAND

Issued 1964
Copyright reserved

5th re-issue

NOTE

The Manufacturers reserve the right to alter specifications at any time without notice

INDEX TO SECTIONS

FOREWORD ...	Page 5
General Data	Page 9
Cooling System	A
Engine	B
Fuel System	C
Clutch & Propeller Shaft	D
Gearbox & Overdrive	E
Front Suspension	F
Rear Axle	G
Rear Suspension	H
Shock Absorbers	
Steering	J
Brakes	K
Wheels & Tyres	L
Electrical System	N
Body	O
Lubrication	P
Oil Seals and Bearings	Q
Special Tools	S

GENUINE PARTS

Whenever replacement parts are required, it is essential that only genuine parts should be fitted.

Genuine replacement parts are manufactured to the same specification and are of the same high quality as those originally fitted to the car—and they are guaranteed.

Insist on genuine parts. Dealers stock them.

FOREWORD

Every possible care is taken during the manufacture of Humber cars to ensure that they leave the factory capable of giving many miles of trouble-free motoring. **Proper lubrication and maintenance are absolutely essential if satisfactory performance is to be obtained.** For details of the factory's recommendations, reference should be made to the Owner's Handbook supplied with the car.

When undertaking any repairs or overhaul it is essential that the unit to be worked on is cleaned and *kept clean* while the work progresses. Dirt is detrimental to the correct functioning of a vehicle and conducive to a high rate of wear.

INDEX

The various units and systems of the vehicle are dealt with in sections which are listed on the first page of this Manual, each being distinguished by a reference letter. Each section thus referred to opens with a contents and index page, so that any particular operation may be picked out in the shortest possible time.

GENERAL DATA

Comprehensive information regarding dimensions, tolerances and weights is given at the beginning of the Manual.

ROOTES GROUP SPECIAL TOOLS

Certain service operations are greatly facilitated by the use of the specially designed tools manufactured by Messrs. V. L. Churchill & Co., Great South West Road, Bedfont, Feltham, Middlesex, England. The use of these tools is described under the appropriate section headings.

DECENTRALISED SERVICE

In order to provide the best possible service for Humber users, the Dealer Organisation throughout the world forms a link between the owner and the factory. All problems relating to the servicing of cars are dealt with through that Organisation, Dealers having behind them the backing of the Factory Service Department.

Owners who require advice or information which is not dealt with in this Workshop Manual should direct their enquiries to their Humber Dealer. In all correspondence it is imperative that the full chassis number, including prefix and suffix letters is quoted and that reference is made to any previous correspondence. The chassis number, including the prefix and suffix letters, will be found on a plate fixed to the bonnet lock platform, and it is also stamped on the right-hand side of the front portion of the chassis frame. The number is visible from under the bonnet.

The engine number will be found on the side of the cylinder block. This information may be required for customs purposes.

FROST PRECAUTIONS

Attention is drawn to the recommendations given in Section "A" (Cooling System). The importance of taking proper precautions against damage by frost cannot be over-emphasised.

ROOTES CONCESSIONAIRE COMPANIES & REGIONAL OFFICES

AUSTRALIA

Rootes (Australia) Ltd., P.O. Box 100, Port Melbourne, S.C.7, Australia. *Tel. No.:* MJY.441

UNITED STATES OF AMERICA

Rootes Motors, Inc., 42-32 Twenty First Street, Long Island City 1, New York, U.S.A. *Tel. No.:* Stillwell 6-2305
Rootes Motors, Inc., 9830, West Pico Boulevard, Los Angeles, 35, California, U.S.A. *Tel. No.:* Crestview 6-4161

CARIBBEAN

Rootes Motors (Western) Ltd., P.O. Box 1479, Nassau, Bahamas. *Tel. No.:* 4174-5-6

MEXICO

Refacciones Britannicas S.A., Ave. Insurgentes Norte 514, Mexico City, Mexico 4, D.F. *Tel. No.:* Mexico City 16-50-44 and 16-50-51

VENEZUELA

Rootes Motors de Venezuela, Apartado 621, Valencia, Edo. Carabobo, Venezuela. *Tel. No.:* 6024

CANADA

Rootes Motors (Canada) Ltd., P.O. Box 174, Station 'H', Toronto, 13, Canada. *Tel. No.:* Plymouth 5-5255
Rootes Motors (Canada) Ltd., 25, St. James Street, Ville St. Pierre, Montreal, P.Q., Canada. *Tel. No.:* Hunter 1-0365
Rootes Motors (Canada) Ltd., 3135, West Broadway, Vancouver, B.C., Canada. *Tel. No.:* Regent 1-3177/8

EUROPE

Rootes (Belgique) S.A., 126, Rue de Linthout, Brussels, 4, Belgium. *Tel. No.:* 33.94.58 and 33.96.05
Rootes Motors S.A., 6, Rond Point des Champs Elysees, Paris, 8, France. *Tel. No.:* 04.37 and 04.38
Rootes Autos S.A., 10, Rue du Commerce, Geneva, Switzerland. *Tel.: No.* 022.25.32 and 30
Rootes Italia, S.p.A., Torre Velasca, Via Velasca 5, Milan, Italy. *Tel. No.:* 803.364
Rootes Autos (Deutschland) GmbH., 4 Dusseldorf-Rath, Oberhausenerstrasse 17, P.O. Box (Postfach) 171, Germany. *Tel. No.:* 63-50-51
Rootes Motors A.B., Osthammarsgatan 64-66, Stockholm, Sweden. *Tel. No.:* 63 01 05
Rootes Espana S.A., Alcala 95 Piso 6, Madrid 9, Spain

EAST AFRICA

Rootes (Kenya) Limited, P.O. Box 3020, Nairobi, Kenya. *Tel. No.:* 20761/2/3

MID. AFRICA

Rootes (C.A.) Pvt. Ltd., P.O. Box 2382, Burnley Road, Workington, Salisbury, Southern Rhodesia. *Tel. No.:* 60641

REPUBLIC OF SOUTH AFRICA

Stanley Motors Ltd., P.O. Box 7712, Stanmot Buildings, 30 Eloff Street, Johannesburg, Transvaal, Republic of South Africa

MIDDLE EAST

Rootes Limited, P.O. Box 2289, Beirut, Lebanon. *Tel. No.:* 21564

FAR EAST

Rootes Limited, Room 1003/4, Union House, Chater Road, Hong Kong. *Tel. No.:* 34209
Yamato Motor Co. Ltd., 22-10 Minami-oi 6 chome, Shinagawa-Ku, Tokyo, Japan. *Tel. No.:* (761)0121 Ext. 266 and (76)2121

Names and addresses of dealers in the different territories can be obtained from the above representatives.

GENERAL DATA

SERIES I to V AND IMPERIAL

CONTENTS

	Page
BRAKES	25
CAPACITIES	10
COOLING SYSTEM	18
DIMENSIONS	10
ENGINE	
—Camshaft	14
—Connecting Rod	14
—Crankshaft	14
—Cylinder block	12
—Cylinder head	13
—General	11
—Gudgeon pin	15
—Performance	11
—Piston	15
—Table of road speed to engine speed	12
—Valves	13
ELECTRICAL SYSTEM	
—Battery	26
—Coil	26
—Distributor (see Ignition System)	18
—Generator	26
—Lamp bulbs	27
—Lighting	27
—Other equipment	28
—Starter	27
FUEL SYSTEM	
—Fuel pump	16
—Carburettor	17
IGNITION SYSTEM	18
LUBRICATION SYSTEM (ENGINE)	16
STEERING	24
SUSPENSION	
—Front	22
—Rear	23
—Shock absorbers	24
TRANSMISSION	
—Clutch	20
—Gearbox	20
—Overall ratios	22
—Propeller shaft	21
—Rear axle	22
WEIGHTS	10
WHEELS AND TYRES	25

GENERAL DIMENSIONS

Wheelbase	9 ft. 2in.	(279·4 cm.)		
Track (Tread)—Front	4 ft. 8⅞ in.	(144·5 cm.)		
Track (Tread)—Rear	4 ft. 7½ in.	(140·9 cm.)		
Ground clearance (unladen)	7 in.	(17·8 cm.)		
Turning circle	38 ft.	(11·6 metres)		
Overall length (SERIES I, II)	15 ft. 4¾ in.	(469·3 cm.)		
Overall length (SERIES III onwards and IMPERIAL)	15 ft. 8 in.	(477·5 cm.)		
Overall width	5 ft. 10½ in.	(179·1 cm.)	5 ft. 10 in. (177·8 cm.)	SERIES V AND INPERIAL
Overall height	5 ft. 1 in.	(155 cm.)	5 ft. 0¾ in. (154·3 cm.)	SERIES V AND INPERIAL
Towing capacity (total load)—Normal	20 cwt.	(1016 kg.)		
—Maximum	25 cwt.	(1270 kg.)		
Weight (approx) with fuel and water—				
—Series I, II—Saloon	3351 lb.	(1520 kg.)		
—Estate car	3456 lb.	(1568 kg.)		
—Series III —Saloon	3362 lb.	(1525 kg.)		
—Estate car	3555 lb.	(1612 kg.)		
—Series IV —Saloon	3405 lb.	(1544 kg.)	3571 lb. (1620 kg.)	SERIES V
—Estate car	3581 lb.	(1624 kg.)	3643 lbs. (1652 kg.)	SERIES V

CAPACITIES

Engine (including filter) *	15 pints	(18 U.S. pints; 8·5 litres)
Gearbox—Standard	3 pints	(3·6 U.S. pints; 1·7 litres)
—Overdrive	5¼ pints	(6·3 U.S. pints; 2·9 litres)
—Automatic	15 pints	(18 U.S. pints; 8·5 litres)
Rear Axle—To B.8204673 (including B.8204704 to B.8204715)	1¾ pints	(2·1 U.S. pints; 1·0 litre)
—From B.8204674 (excluding B.8204705 to B.8204716)	3 pints	(4·6 U.S. pints; 1·7 litres)
Cooling system	26 pints	(31·2 U.S. pints; 16·0 litres)
Fuel tank—Series I to III	12½ gall.	(15 U.S. gall.; 56·8 litres)
—Series IV onwards and Imperial	16 gall.	(23 U.S. gall.; 72·7 litres)

*After the sump is drained, approximately 3 pints (1·7 litres) remain in the oilways, filter, etc., and 12 pints (6·8 litres) are sufficient for refilling.

GENERAL

	SERIES I	SERIES II ONWARDS AND IMPERIAL
No. of cylinders	6	6
Bore size	3·25 in. (82·55 mm.) Nominal	3·44 in. (87·4 mm.) Nominal
	A grade 3·2492 in./3·2496 in. (82·53 mm./82·54 mm.)	A grade 3·4367 in./3·4371 in. (87·29 mm./87·30 mm.)
	B grade 3·2496 in./3·25 in. (82·54 mm./82·55 mm.)	B grade 3·4371 in./3·4375 in. (87·30 mm./87·31 mm.)
	C grade 3·25 in./3·2504 in. (82·55 mm./82·56 mm.)	C grade 3·4375 in./3·4379 in. (87·31 mm./87·32 mm.)
	D grade 3·2504 in./3·2508 in. (82·56 mm./82·57 mm.)	D grade 3·4379 in./3·4383 in. (87·32 mm./87·33 mm.)

When the letter T is seen stamped as an additional letter to the cylinder bore grading letters, it should be ignored. Its only use is in connection with the production selective assembly grading system.
For service purposes a cylinder bore stamped AT is grade A, and a bore stamped B1T is grade B1, etc.

Stroke	3·25 in. (82·55 mm.)	3·25 in. (82·55 mm.)
Capacity	161·5 cu. ins. (2651 cu. cms.)	180·9 cu. ins. (2965 cu. cms.)

PERFORMANCE (SERIES I)

Compression ratio	7·0 : 1	7·5 : 1	8·0 : 1
Compression pressure ...	152/162 lbs. sq. in. (10·6/11·3 kg. cm²)	155/165 lbs. sq. in. (10·9/11·6 kg. cm²)	160/170 lbs. sq. in. (11·2/11·9 kg. cm²)
Max. B.H.P.	105 nett 112 gross	110·5 nett 118 gross	115 nett 123 gross
Developed at	5,000 r.p.m.	5,000 r.p.m.	4,900 r.p.m.
Max. torque in lbs. ft. ...	133·8 (18·49 kg.m.)	138·3 (19·12 kg.m.)	138·3 (19·12 kg.m.)
Developed at	1,600—2,400 r.p.m.	1,600—2,400 r.p.m.	1,600—2,400 r.p.m.
Max. B.M.E.P. in lbs./sq. in.	125 (8·79 kg./sq. cm.)	129 (9·07 kg./sq. cm.)	129 (9·07 kg./sq. cm.)
Developed at	1,600—2,400 r.p.m.	1,600—2,400 r.p.m.	1,600—2,400 r.p.m.

PERFORMANCE (SERIES II AND III)

Compression ratio	7·0 : 1	7·5 : 1	8·0 : 1
Compression pressure ...	145/155 lbs. sq. in. (10·1/10·8 kg. cm²)	155/165 lbs. sq. in. (10·9/11·6 kg. cm²)	165/175 lbs. sq. in. (11·6/12·3 kg. cm²)
Max. B.H.P.	110·5 nett 118 gross	116·25 nett 124·2 gross	121 nett 129·5 gross
Developed at	5,000 r.p.m.	5,000 r.p.m.	4,900 r.p.m.
Max. torque in lbs. ft. ...	155 (21·4 kg.m.)	161·8 (22·4 kg.m.)	161·8 (22·4 kg.m.)
Developed at	1,800 r.p.m.	1,800 r.p.m.	1,800 r.p.m.
Max. B.M.E.P. in lbs./sq. in.	131 (9·18 kg./sq. cm.)	135 (9·46 kg./sq. cm.)	135 (9·46 kg./sq. cm.)
Developed at	1,800 r.p.m.	1,800 r.p.m.	1,800 r.p.m.

PERFORMANCE (SERIES IV, V and IMPERIAL)

	Series IV		Series V and Imperial	
Compression ratio	7·5 : 1	8·0 : 1	7·5 : 1	8·0 : 1
Compression pressure ...	155/165 lbs. in² (10·9/11·6 kg. cm²)	165/175 lbs. in² (11·6/12·3 kg. cm²)	155/165 lbs. in² (10·9/11·6 kg. cm²)	165/175 lbs. in² (11·6/12·3 kg. cm²)
Max. B.H.P.	119 nett 127 gross	124 nett 133 gross	124 nett 132 gross	128·5 nett 137·5 gross
Developed at	5,000 r.p.m.	5,000 r.p.m.	5,000 r.p.m.	5,000 r.p.m.
Max. torque in lbs. ft. ...	157 (21·7 kg.m)	160 (22·1 kg.m)	161 (22·2 kg.m)	167 (23·1 kg.m)
Developed at	2,600 r.p.m.	2,600 r.p.m.	2,600 r.p.m.	2,600 r.p.m.
Max. B.M.E.P. in lbs./sq. in.	131 (9·18 kg. cm²)	133 (9·3 kg. cm²)	134 (9·4 kg. cm²)	139 (9·7 kg. cm²)
Developed at	2,600 r.p.m.	2,600 r.p.m.	2,600 r.p.m.	2,600 r.p.m.

CYLINDER BLOCK

	SERIES I	SERIES II ONWARDS AND IMPERIAL
Material	Cast iron	Cast iron
Max. oversize ...	0·040 in. (1·016 mm.)	0·040 in. (1·016 mm.)
Linering size	3·405 in./3·406 in. (86·487 mm./86·512 mm.)	3·593 in./3·594 in. (91·262 mm./91·288 mm.)
Liner outside diameter	3·409 in./3·410 in. (86·589 mm./86·614 mm.)	3·597 in./3·598 in. (91·364 mm./91·389 mm.)
Interference fit ...	·003 in./·005 in. (·0762 mm./·1270 mm.)	·003 in./·005 in. (·0762 mm./·1270 mm.)

ROAD SPEED/ENGINE SPEED

Road speed at 1,000 engine r.p.m.

Gear	SERIES I, II, and III (4·55 : 1)	SERIES IV, V (4·22 : 1)
O/D Top	22·1 mph (35·5 kph)	23·9 mph (38·4 kph)
Top	17·2 mph (27·6 kph)	18·6 mph (29·8 kph)
O/D Intermediate	13·7 mph (22·0 kph)	—
Intermediate	10·7 mph (17·1 kph)	12·8 mph (20·5 kph)
First	6·1 mph (9·7 kph)	6·6 mph (10·5 kph)
Reverse	5·4 mph (8·6 kph)	5·9 mph (9·4 kph)

This table does not apply to cars fitted with automatic transmission

CYLINDER HEAD (for torque loading figures see table at end of section)

Material	Cast iron
Size of cylinder head studs	$\frac{7}{16}$ in.—20 U.N.F.

VALVES

Position	Overhead
Operation	Push rod and rocker
Head diameter—Inlet (Series I to III)	1·546 in./1·550 in. (39·27 mm./39·37 mm.)
—Inlet (Series IV)	1·630 in./1·634 in. (41·4 mm./41·5 mm.)
—Exhaust	1·332 in./1·336 in. (33·83 mm./33·93 mm.)
Angle of seat in cylinder head	45°
Angle of valve face—Inlet and Exhaust	45°
Stem Diameter—Inlet	·3417 in./·3422 in. (8·679 mm./8·692 mm.)
—Exhaust	·3407 in./·3412 in. (8·654 mm./8·666 mm.)
Valve stem clearance in guide—Inlet	·003 in./·001 in. (·0762 mm./·0254 mm.)
—Exhaust	·004 in./·002 in. (·102 mm./·0508 mm.)
Length of valves	Exhaust 4·66 in. (118·36 mm.) Inlet 4·92 in. (125 mm.)
Type of springs—Series I to III	Single
—Series IV	Dual
Spring retention	Cup and split cotters
Valve spring (Series I to III)—fitted length	1·65 in. (41·91 mm.)
—load fitted	75 lbs. (34·02 kg.)
Valve spring, outer (Series IV)—fitted length	1·65 in. (41·91 mm.)
—load fitted	51·5 lbs. (23·36 kg.)
Valve spring, inner (Series IV)—fitted length	1·53 in. (38·86 mm.)
—load fitted	24 lbs. (10·88 kg.)
Guides	Detachable (top of guide marked "Top")
Guides fit, in head	·0002 in./·0017 in. (·005 mm./·043 mm.) interference
Valve guide positions—Inlet	0·61 in. (15·49 mm.) above cylinder head
*Exhaust—*without oil-seal below cotters*	0·75 in. (19·05 mm.) above cylinder head
Exhaust—*with oil-seal below cotters*	0·65 in. (16·51 mm.) above cylinder head
Valve clearance (Engine hot)—Inlet	·014 in. (·356 mm.)
—Exhaust	·014 in. (·356 mm.)
Timing—inlet opens	20° B.T.D.C.
—inlet closes	46° A.B.D.C.
—exhaust opens	52° B.B.D.C.
—exhaust closes	14° A.T.D.C.

For checking set rocker clearance to ·019 in. (·50 mm.)

Port diameter—Inlet	1·397 in./1·403 in. (35·48 mm./35·64 mm.)
—Exhaust	1·197 in./1·203 in. (30·4 mm./30·56 mm.)

**Early engines*

CAMSHAFT

Position	Right-hand side
No. of bearings	4
Type of bearings	Steel shell white metal lined
Lubrication	Pressure
End thrust	Location plate at front
Drive	Duplex chain
Lubrication of drive	Oil feed through tensioner
Chain tensioner	Automatic adjuster
End float	0·0033 in. (·084 mm.) 0·0053 in. (1·28 mm.)
Journal diameters	1·8728 in. (47·570 mm.) 1·8720 in. (47·549 mm.)
Maximum clearance, journal to bearing	·0045 in. (·114 mm.)

CRANKSHAFT (for torque loading figures see table at end of section)

Balance	Integrally forged counterweights
No. of main bearings	4
Type of main bearings (SERIES I and II)	Steel shell, white metal lined
Type of main bearings (SERIES III ONWARDS AND IMPERIAL)	Steel shell, copper/lead indium lined on Nos. 1, 2, 3 steel shell, white metal lined on No. 4 (rear)
Diameter of main journals	2·4990 in. (57·147 mm.) 2·4995 in. (57·16 mm.)
Type of crankpin bearings	Steel shell white metal lined
Diameter of crankpin	2·001 in. (50·825 mm.) 2·0005 in. (50·812 mm.)
Lubrication	Pressure
End thrust	Thrust washers flanking top half of main bearing between No. 4 and 5 cylinders—·005 in. (·127 mm.) oversize available
End float	0·002 in. (·051 mm.) 0·004 in. (·101 mm.)
Main bearing running clearance	·0007 in. (·018 mm.) ·0025 in. (·064 mm.)
Max. undersize for re-grinding	·040 in. (1·02 mm.)
Undersize replacements	—0·020 in. (—·51 mm.) and —·040 in. (—1·02 mm.)
Size of main bearing cap bolts	½ in.—20 U.N.F. 2A ·500 in. diameter × 2·70 in. long ·496 in. diameter × 2·72 in. long

CONNECTING ROD (for torque loading figures see table at end of section)

Material and type	Steel "H" section
Distance between centres	5·876 in. (149·25 mm.)—5·874 in. (149·2 mm.)
Small end bearings	Clevite 10 (Vandervell)
Undersize bearings available	—0·020 in. (—·580 mm.) and —0·040 in. (—1·016 mm.)
Big end bore (without bearings)	2·1465 in. (54·52 mm.)—2·1460 in. (54·51 mm.)

Small end bore size	1·0625 in./1·0615 in. (26·977 mm./26·952 mm.)
Big end, end float	·008 in./·012 in. (·203 mm./·305 mm.)
Big end bearing running clearance	·002 in./·0005 in. (·051 mm./·013 mm.)
Size of big end bolts...	$\frac{3}{8}$ in.—24 U.N.F.
Cylinder wall lubrication	Oil squirt holes in big ends

GUDGEON PIN

Type and method of location	Tubular fully floating—Circlips
Finish	Heat treated, ground and lapped
Diameter—High grade—white	·9376 in./·9377 in. (23·815/23·817 mm.)
—Medium grade—green...	·9375 in./·9376 in. (23·813/23·815 mm.)
—Low grade—yellow	·9374 in./·9375 in. (23·811/23·813 mm.)

PISTON

Type and material—Series I	"T" slot—Lo-ex alloy (tin-plated)
—Series II and III	Slotted Lo-ex alloy (tin-plated)
—Series IV onwards and Imperial	Solid skirt Heplex (tin-plated)
No. of rings, Compression—Series I	3 *(Top, chromium plated. Second and third, plain with taper side face)*
—Series II onwards and Imperial ...	2 *(Top, chromium plated. Second, corner-stepped)*
Scraper—Series I	1 *(Briflex with plain, faced rings)*
—Series II onwards and Imperial ...	1 *(Microland)*
Ring gap (fitted) in "A" grade bore	
Series I to III—Compression	·009/·014 in. (·22/·35 mm.)
—Scraper	·018/·037 in. (·45/·93 mm.)
Series IV onwards and Imperial	
—Compression (No. 1) ...	·014/·022 in. (·35/·55 mm.)
—Compression (No. 2) ...	·010/·015 in. (·25/·38 mm.)
—Scraper	·010/·015 in. (·25/·38 mm.)

Compression—Ratio (All Models)	7·0 : 1	7·5 : 1	8·0 : 1
—Identification (Series I) ...	1201053	1201027	1201074* or 1201081
—Identification (Series II and III)	1201138	1201136	1201099
—Identification (Series IV onwards and Imperial)	1214601	1214591	1214571
—Height (Series I)	2·035/2·040 in. (51·68/51·81 mm.)	2·080/2·085 in. (52·83/52·95 mm.)	2·120/2·125 in. (53·84/53·97 mm.)
—Height (Series II onwards and Imperial)	2·025/2·030 in.	2·025/2·030 in.	2·070/2·075 in.
Overall height—Series I	3·465 in. (88·01 mm.)	3·501 in. (89·15 mm.)	3·550 in. (90·17 mm.)
—Series II onwards and Imperial ...	3·452 in. (87·70 mm.)	3·452 in. (87·70 mm.)	3·497 in. (88·82 mm.)

**Early engines*

Fitting clearance (skirt bottom)—Series I ...	·0013/·0023 in. (·033/·058 mm.)
—Series II and III	·0006/·002 in. (·015/·051 mm.)
—Series IV onwards and Imperial ...	·0004/·0012 in. (0·10/·030 mm.)
Max. permissible weight variation between any two pistons in set—Series I	2 drams
—Series II onwards and Imperial ...	4 drams

Grade at top of skirt—Series I

A	3·2467/3·2471 in. (82·466/82·476 mm.)	
B	3·2471/3·2475 in. (82·476/82·486 mm.)	
C	3·2475/3·2479 in. (82·486/82·497 mm.)	
D	3·2479/3·2483 in. (82·497/82·507 mm.)	
E	3·2483/3·2487 in. (82·507/82·517 mm.)	For service use only
F	3·2487/3·2491 in. (82·517/82·527 mm.)	

—Series II and III

A	3·4328/3·4332 in. (87·193/87·203 mm.)	
B	3·4332/3·4336 in. (87·203/87·213 mm.)	
C	3·4336/3·4340 in. (87·213/87·224 mm.)	
D	3·4340/3·4344 in. (87·224/87·234 mm.)	
E	3·4344/3·4348 in. (87·234/87·244 mm.)	For service use only
F	3·4348/3·4352 in. (87·244/87·254 mm.)	

—Series IV onwards and Imperial

A	3·4359/3·4363 in. (87·271/87·281 mm.)	
B	3·4363/3·4367 in. (87·281/87·291 mm.)	
C	3·4367/3·4371 in. (87·291/87·301 mm.)	
D	3·4371/3·4375 in. (87·301/87·311 mm.)	
E	3·4375/3·4379 in. (87·311/87·321 mm.)	For service use only

LUBRICATION

Type of system and pump	Pressure—submerged Hobourn Eaton
Type of intake	Fixed gauze filter on pump intake
Pump drive	Skew gear on camshaft
Clearance between end of pump rotors and	·003 in. (·076 mm.)
bottom cover plate	·001 in. (·025 mm.)
Clearance between inner and outer rotor lobe	·010 in. (·25 mm.)
tips	Maximum
Relief valve spring—Free length	3·27 in. (83 mm.)
—Rate	23·76 lbs./inch (4·24 kg./cm.)
—Check	To exert 15·3 lbs. ± ½ lb. @ 2·625 in.
	To exert 6·94 kgs. ± ·226 kgs @ 66·7 mm.
Normal oil pressure (Hot) at 50 m.p.h. (80 km./hr.)	45—50 lbs./sq. in. (3·1—3·5 kg./sq. cm.)
Filter—Make and type	A.C.—full flow with removable element (Throw-away type on Series V and Imperial)
—Maker's element No.	A.C. 70
—Model	A.C. 1531654

FUEL PUMP

Type	Mechanical
Operation	Arm and eccentric on camshaft
Pressure	2 to 3½ lb./sq. in. (·14 to ·25 kg./sq. cm.)
Filter	Glass sediment bowl incorporated with pump

CARBURETTOR (SERIES I)

Make and type ... Stromberg DIV-42, Downdraught

Settings

Venturi (Choke tube)	1 5/16 in.	High speed bleed	52
Main discharge jet	L.2080	Pump discharge jet	70
Metering jet	·068 in. (Sea level to	Pump link position	Outer hole
By-pass jet	·062 in. 4000′ (1217 m.)	Float needle valve seat	·113 in.
Idle tube feed	64	Fast idle gap	·046 in.
Idle tube top bleed	75		

Altitude settings

	4000′ (1217 m.) to 7500′ (2288 m.)	7500′ (2288 m.) to 10000′ (3048 m.)	10000′ (3048 m.) to 12500′ (3812 m.)	12500′ (3812 m.) to 15000′ (4576 m.)	From 15000′ (4576 m.)
Metering jet	·067 in.	·066 in.	·065 in.	·064 in.	·063 in.
By-pass jet	·061 in.	·060 in.	·059 in.	·058 in.	·057 in.

CARBURETTOR (SERIES II AND III)

Make and type ... Zenith 42 WIA, Downdraught

Settings	*Oil bath air cleaner*	*Dry element air cleaner*
Choke	33	33
Main jet	165	170 (Sea level to
Compensating jet	130	150 4000′ (1217 m.)
Main discharge jet	220.968	220.968
High speed bleed	180	180
Slow running	50	45
Idle air bleed	150	150
Fast idle	·040 in. (1 mm.)	·040 in. (1 mm.)
Pump jet	50	50
Pump stroke	Long	Long

Altitude settings

		4000′ (1217 m.) to 7500′ (2288 m.)	7500′ (2288 m.) to 10000′ (3048 m.)	10000′ (3048 m.) to 12500′ (3812 m.)	12500′ (3812 m.) to 15000′ (4576 m.)	From 15000′ (4576 m.)
Oil bath air cleaner	Main jet	157	152	147	145	142
	Compensating jet	125	120	115	112	110
Dry element air cleaner	Main jet	162	155	150	147	145
	Compensating jet	145	135	130	127	125

CARBURETTOR (SERIES IV)

Make and type	Zenith 42 WIA, Downdraught
Settings	*Dry element air cleaner*
Choke	33
Main jet	150 Sea level to
By-pass jet	120 4000′ (1217 m.)
High speed bleed	110
Slow running	50
Idle air bleed	50
Fast idle	·040 in. (1 mm.)
Pump jet	50
Pump stroke	Long with 11 mm. collar

Altitude settings	4000′ (1217 m.) to 7500′ (2288 m.)	7500′ (2288 m.) to 10000′ (3048 m.)	10000′ (3048 m.) to 12500′ (3812 m.)	12500′ (3812 m.) to 15000′ (4576 m.)	From 15000′ (4576 m.)
Dry element air cleaner — Main jet	142	135	130	127	125
Dry element air cleaner — By-pass jet	119	118	117	116	115

CARBURETTOR (SERIES V AND IMPERIAL)

Make and type	Stromberg 175.CD, Sidedraught

Settings	Up to 5000′ (1500 m.)	5000′ to 10000′ (3000 m.)	Over 10000′
Needle—internal vent	4A	2L	2M
—external vent	2K	2N	1B
Spring	Blue	Uncoloured	Uncoloured
Idling speed	650 r.p.m.		

COOLING SYSTEM

Type of pump	Centrifugal
Fan—No. of blades and diameter (Series I and II)	8, 12 in. (30 cm.)
—No. of blades and diameter (Early Series III)	4, 15 in. (38 cm.)
—No. of blades and diameter (Later Series III onwards and Imperial)	2, 15 in. (38 cm.)
Radiator relief valve	In filler cap
Thermostat opening temperatures	Series I and II (bellows type element) 170°F. (77°C.)
Thermostat opening temperatures	Series III onwards and Imperial (wax element) 190°F. (87·8°C.)
Radiator relief valve operating pressure	Series I and II 7 lb./sq. in. (·49 kgs./sq. cm.)
Radiator relief valve operating pressure	Series III onwards and Imperial 13 lb./sq. in. (·91 kgs./sq. cm.)
Drain tap—Radiator	Right side
—Cylinder block	Right side
Fan belt—Depth	·426 in. (10·82 mm.)
—Angle of "V"	40°
—Length (outside circumference)	38·25 in. (96·2 cms.)
—Tension (in longest straight length)	$\frac{5}{8}$ in. (16 mm.)

IGNITION SYSTEM

Firing order	1, 5, 3, 6, 2, 4 (No. 1 next to radiator)
Ignition control	Fully automatic—vacuum and centrifugal
Ignition timing (static—full retard)	5° to 7° B.T.D.C. (Premium grade fuels)
Distributor—Maker's type	DM.6

Distributor—Drive	Gear on front of camshaft
—Direction of drive	Anti-clockwise viewed from rotor end
—Firing angles	0°, 60°, 120°, 180°, 240°, 300°
—Closed period	35° ± 3°
—Open period	25° ± 3°
—Contact breaker gap	·016 in. (·406 mm.)
—Contact breaker spring tension	18—24 ozs. (·51—·68 kgs.) measured at contacts
—Capacitor (condenser)	·18—·23 microfarad

Compression ratio		*Service No.*	*Advance curve no.*	*Vacuum unit marking*
7·0 : 1 and 7·5 : 1	Series I	40601	ECM 388	8—18—7
	Series II	40660	ECM 698	8—18—7
	Series III	40713 or 40824		
	Series IV	40900		
	Series V and Imperial	40900 or 41049		
8·0 : 1	Series I	40660	ECM 698	8—18—7
	Series II	40685	ECM 716	8—18—7
	Series III	40714		
	Series IV	40901	ECM 784	2—6—3
	Series V and Imperial	40901 or 41050		

Distributor testing data

Centrifugal advance curve no. 388

Decelerating on test rig		Decelerating on engine	
Dist. r.p.m.	*Dist. degrees*	*Crank r.p.m.*	*Crank degrees **
1500	11—13	3000	22—26
950	11—13	2000	22—26
800	8—11	1600	16—22
370	0— 3	800	1— 7
No advance below 200 r.p.m.		No advance below 400 r.p.m.	

Centrifugal advance curve no. 698

Decelerating on test rig		Decelerating on engine	
Dist. r.p.m.	*Dist. degrees*	*Crank r.p.m.*	*Crank degrees **
1200	9—11	3000	18—22
800	9—11	1600	18—22
600	5— 7	1200	10—14
350	0— 2	800	2— 6
No advance below 225 r.p.m.		No advance below 450 r.p.m.	

Centrifugal advance curve no. 716

Decelerating on test rig		Decelerating on engine *	
Dist. r.p.m.	*Dist. degrees*	*Crank r.p.m.*	*Crank degrees*
1500	9 max.	3000	14—18
1000	7—9	2000	14—18
700	3—5	1200	4— 8
500	½—2½	800	0— 3
No advance below 325 r.p.m.		No advance below 650 r.p.m.	

Centrifugal advance curve no. 784

Decelerating on test rig		Decelerating on engine *	
Dist. r.p.m.	*Dist. degrees*	*Crank r.p.m.*	*Crank degrees*
1800	14—16	3500	28—32
1250	14—16	2500	28—32
1000	10—12	2000	20—24
400	½—2½	1200	7—11
300	0—1	800	1— 5
No advance below 230 r.p.m.		No advance below 460 r.p.m.	

** The static ignition advance angle must be added to these figures when testing the distributor on the engine.*

Vacuum advance unit marking 8—18—7 ... ...

Mercury in.	*Dist. degrees*	*Crank degrees*
25	6 —8	12—16
14	4½—7½	9—15
10	1 —4½	2— 9
6	0 — ½	0— 1

No advance below 5 in. mercury

Vacuum advance unit marking 2—6—3 ... ...

Mercury in.	*Dist. degrees*	*Crank degrees*
15	2—4	4—8
5	1½—3½	3—7
3½	½—2½	1—5

No advance below 1 in. mercury

Spark Plugs—Make and Type (Series I to IV) ... ... Champion N.5
(Series V and Imperial) ... Champion N.9.Y
—Gap ... ... ·025" (·63 mm.)

CLUTCH

Type ... ... Single dry plate, hydraulically operated
Driven plate (all models) ... ... 9 in. (22·9 cm.) diameter, flexible hub
Thrust bearing ... ... Graphite ring (MY3D)
Clutch assembly (Series I to III)
—Lever tip height ... ... 1·895 in. (48·13 mm.)
—No. and colour of pressure springs ... 9 Black (Series I), 9 White (Series II and III)
—No. and colour of driven plate springs ... 6 Buff and light green
Clutch assembly (Series IV onwards)
—Diaphragm spring ... ... Not adjustable (see Section D)
—No. and colour of driven plate springs ... 6 Dark grey and light green

GEARBOX

No. of forward speeds ... ... 3, all synchromesh
Mainshaft bearings ... ... Ball
Layshaft bearings ... ... Needle roller
Reverse gear bearings ... ... Bronze bush
Stemwheel spigot bearing type ... ... Needle roller
Combined dipstick and filler ... ... Accessible through floor

	SERIES I to III	SERIES IV ONWARDS
Gearbox ratios—Top	1·00 : 1	1·00 : 1
—Intermediate	1·611 : 1	1·452 : 1
—First	2·801 : 1	2·803 : 1
—Reverse	3·137 : 1	3·137 : 1

Layshaft end float ... ... ·006 in./·008 in. (·15/·20 mm.)
Adjustment of mainshaft ... ... None (end float controlled by ball race)
Adjustment of layshaft ... ... Selective assembly of thrust washers

Speedometer gears *	PINION	WHEEL	REVS./MILE and KM.	HEAD
Series I (Standard)	P.115165 (17 teeth)	P.113467 (5 teeth)	1000 and 620	All models
				P.46238 (SN.5353/00) M.P.H.
				P.46239 (SN.5353/01) K.P.H.
Series I (Overdrive)	5030663 (17 teeth)	5030661 (5 teeth)	1000 and 620	
Series II (Standard)	P.115165 (17 teeth)	P.113467 (5 teeth)	1000 and 620	All models
				1202048 (SN.5353/04) M.P.H.
				1202049 (SN.5353/05) K.P.H.
Series II (Overdrive) ...	5030663 (17 teeth)	5030661 (5 teeth)	1000 and 620	
				All models (R.H.D.)
				1208384 (SN.5353/12) M.P.H.
Series III (Standard)	P.115165 (17 teeth)	P.113467 (5 teeth)	1000 and 620	1208385 (SN.5353/13) K.P.H.
Series III (Overdrive) ...	5030663 (17 teeth)	5030661 (5 teeth)	1000 and 620	All models (L.H.D.)
				1208478 (SN.5331/00) M.P.H.
				1208479 (SN.5331/01) K.P.H.
				All models (R.H.D.)
				1215220 (SN.5353/22) M.P.H.
Series IV (Standard) ...	P.115164 (16 teeth)	P.113467 (5 teeth)	1000 and 620	1215221 (SN.5353/02) K.P.H.
Series IV (Overdrive) ...	5040632 (16 teeth)	5030661 (5 teeth)	1000 and 620	All models (L.H.D.)
				1215222 (SN.5353/23) M.P.H.
				1215223 (SN.5353/03) K.P.H.

Series V (all models)—Gears as Series IV

—Head—1228446 (SN.5341/00) M.P.H. } R.H.D.
—1228448 (SN.5341/01) K.P.H. }
—1228447 (SN.5342/00) M.P.H. } L.H.D.
—1228449 (SN.5342/01) K.P.H. }

**For cars fitted with automatic transmission, see WSM.127, Part No. 6601186*

PROPELLER SHAFT

Type	Two-piece open shaft with centre bearing
Outside diameter	2 in. (50·8 mm.)
Universal joint	Needle roller
Telescopic portion	Forward end of rear shaft
Spline travel	1 in. (25·4 mm.)
Lubrication	4 points (1 on sliding sleeve only, Series V and Imperial)

REAR AXLE (for torque loading figures see table at end of section)

Type	Semi-floating
Casing	Banjo
Final drive	Hypoid
Final drive ratio (Series I to III)	4·55 : 1 (4·55 : 1 also with overdrive) *4·22 : 1 with automatic transmission
Final drive ratio (Series IV and V all models and Imperial)	4·22 : 1
Bearings—Bevel pinion	Taper roller
—Differential and crown wheel assembly	Taper roller
—Hub	Ball
Crown wheel to pinion backlash	0·005 in./0·009 in. (0·13 mm./0·23 mm.) (This figure applies to parts in new condition only)
Number of teeth—Crown wheel / —Bevel pinion	41 / 9 } 4·55 : 1 — 38 / 9 } 4·22 : 1
Adjustment—Bevel pinion	Shims
—Differential assembly	Shims

Series I models with Automatic Transmission have 4·55 ratio

OVERALL RATIOS (Series I, II and III)

	Without Overdrive	With Overdrive	(SERIES I) With Automatic Transmission	(SERIES II AND III) With Automatic Transmission
Top	4·55 : 1	* 3·542 : 1	4·55 : 1	4·22 : 1
Second (Intermediate)	7·339 : 1	* 5·707 : 1	13·67 : 1— 6·5 : 1	14·47 : 1—6·04 : 1
First	12·769 : 1	12·769 : 1	22·09 : 1—10·54 : 1	23·38 : 1—9·75 : 1
Reverse	14·292 : 1	14·292 : 1	20·0 : 1—9·52 : 1	21·20 : 1—8·82 : 1

Overdrive ratios

OVERALL RATIOS (Series IV and V all models and Imperial)

Gear	STANDARD AND OVERDRIVE	AUTOMATIC TRANSMISSION
O/D Top	3·283 : 1	—
Top	4·222 : 1	4·222 : 1
Intermediate	6·129 : 1	12·67 to 6·03 : 1
First	11·835 : 1	20·47 to 9·77 : 1
Reverse	13·246 : 1	18·54 to 8·82 : 1

FRONT SUSPENSION (for torque loading figures see table at end of section)

Type	Independent
Design	Coil spring and swinging link
Spring—Outside diameter (All springs)	4·50 in. (114 mm.)
—Static laden length (All springs)	9·95 in. (253 mm.) (Spring off car)
—Static laden loading (All springs)	1600 lbs. (725·8 kgs.) (Spring off car)
—Free length *Standard spring*	16·8 (427 mm.)
—Free length *Heavy Duty spring*†	15·2 in. (386 mm.)

—Outside diameter	4·54 in. (115·3 mm.)	(SERIES III) up to Chassis No. B.8106894
—Free length	13·67 in. (347·4 mm.)	
—Outside diameter	4·43 in. (112·5 mm.)	Series III Saloon only from Chassis No. B.8106895
—Free length	14·21 in. (361 mm.)	
—Outside diameter (Home)	4·53 in. (115 mm.)	ALL SERIES IV, V AND IMPERIAL
—Outside diameter (Spec. export) ...	4·54 in. (115·3 mm.)	
—Static laden length	9·95 in. (253 mm.)	
—Static laden load	1600 lbs. (725·8 kg.)	
—Free length (Home)	14·21 in. (361 mm.)	
—Free length (Spec. export)	13·67 in. (347·4 mm.)	
Loading for checking front spring in position ...	370 lbs. (167·8 kgs.) 36" (91 cms.) rearward of front wheel centres	
Castor angle	2° negative, Series I to IV and Series V without power steering; ½° positive, Series V and Imperial	*With car on gap gauges For correct method of checking see Section F*
Wheel camber angle	0° 45′ ± 15′	
King pin inclination	8° 15′ ± 15′	
Toe-in (Track setting) at wall of tyres	*·125 in. (3 mm.)	
Ackerman angles (toe-out on turns)	20° outer wheel 22° 10′ ± 30′ inner wheel	
Wheel lock angles‡	Inner lock 36°, outer lock 30°	
Hub bearings—Inner	Skefco K15123/K15250	
—Outer	Timken 09067/09195	
Swivel pin bearings	Bushes	
Length of top link	8·75 in. (222 mm.)	
Length of bottom link	16·5 in. (419 mm.)	
Wheel movement—Laden to rebound	3·6 in. (91·4 mm.)	
—Laden to bump	2·5 in. (63·5 mm.)	
Type of bushes	Threaded steel	
Lubrication of bushes	Individual nipple	
Limitation of movement	Special rubber buffers	

**Equivalent to an angle between the wheels of 15′ ± 5′*
‡For cars fitted with Power Steering see Section J

REAR SUSPENSION (for torque loading figures see table at end of section)

Type	Semi-elliptic
Springs—Length between centres...	52 in. (132·1 cm.)
—Width (Series I and II)	2·5 in. (6·35 cm.)
—Width (Series III onwards and Imperial)	3·0 in.(7·62 cm .)
—Depth (Series I and II saloon)	1·52 in. (3·86 cm.)
—Depth (Series I and II estate car) ...	1·72 in. (4·37 cm.)
—Depth (Series III)	1·22 in. (3·1 cm.)
—Depth (Series III and IV from Chassis No. B8104105)	1·14 in. (2·8 cm.); 1·31 in. (3·3 cm.) Saloon; 1·56 in. (3·9 cm.) Estate—Series V
—Bushes	Steel and rubber
—Eyes	Rolled

No. of blades (leaves) per spring	
—Series I and II (Saloon)	5×15/64 in. (6 mm.)+1×11/32 in. (8·7 mm.)
—Series I and II (Estate car)	5×9/32 in. (7 mm.)+1×5/16 in. (7·9 mm.)
—Series III (All models)	4×15/64 in. (6 mm.)+1×9/32 in. (7 mm.)
—Series III (Saloon from Chassis No. B8104105)	4×7/32 in. (5·5 mm.)+1×9/32 in. (7 mm.)
—Series IV (All models)	3×7/32 in. (5·5 mm.)+1×15/64 in. (6 mm.)+1×1/4 in. (6·3 mm.)
—Series V (Saloon) and Imperial	4×3/16 in. (4·7 mm.)+1×7/32 in. (5·5 mm.)+1×11/32 in. (8·7 mm.)
—Series V (Estate car)	4×7/32 in. (5·5 mm.)+1×1/4 in. (6·3 mm.)+1×3/8 in. (9·5 mm.)
No. of clips per spring	4
Laden camber—Saloon	Zero
... ...	Zero
Laden camber load—Saloon	464 lbs. (210 kg.)
—Estate car	1077 lbs. (488 kg.)
Free camber—Series I and II (Saloon)	6·9 in. (1·75 cm.)
—Series I and II (Estate car)	5·6 in. (1·42 cm.)
—Series III (Saloon)	5·7 in. (1·45 cm.)
—Series III and IV (Saloon from Chassis No. B8104105)	6·5 in. (1·65 cm.)
—Series III and IV (Estate car) ...	6·8 in. (1·73 cm.)
—Series V (Saloon and Imperial) ...	0·25 in. (23·5 cm.)
—Series V (Estate car)	7·22 in. (18·3 cm.)

SUSPENSION CONTROL

Shock absorber—Type	Armstrong direct-acting telescopic
—Model	AT.10
Sway eliminator—Type	Torsion bar
—Location	Between front suspension bottom links (on Series V Saloons a torsion bar is added to the rear suspension)

STEERING (for torque loading figures see table at end of section)

(For steering angles see under "Front Suspension")

Steering box—Type and ratio (Series I to III) ...	Burman "F" type, 17·5 : 1
—Type and ratio (Series IV) ...	Burman "F.3" type, 18·3 : 1 (power operated on Series V and Imperial)
—Angular movement	75° at rocker shaft
—Inner column adjustment ...	Shims
—Rocker shaft adjustment	Adjusting screw
Steering wheel—Diameter	17 in. (43 cm.)
—Turns lock-to-lock	4
Drop arm movement from central position	34° 45′ to L.H. lock 34° 45′ to R.H. lock

BRAKES (SERIES I)

Make	Girling
Means of operation—Foot	Hydraulic servo assisted
—Hand	Cable and linkage operating rear brakes only
Brake design—Front	Drum incorporating two trailing shoes
—Rear	Drum incorporating leading and trailing shoes
Linings—Material	Ferodo DM8 (front) Ferodo DM1 (rear)
—Width	2·25 in. (57 mm.)
—Total area	169 in.² (1090 cm²)
Drum diameters	11 in. (26·9 cm.) front and rear
Brake adjustments—Front	Self-adjusting
—Rear	Square-headed adjuster to rear of back plate
Master cylinder bore	·875 in. (22·2 mm.)
Wheel cylinder bores	1·25 in. (31·8 mm.) front; ·625 in. (15·8 mm.) rear

BRAKES (SERIES II onwards and IMPERIAL)

Make	Girling
Means of operation—Foot	Hydraulic servo assisted
—Hand	Cable and linkage operating rear brakes only
Brake design—Front	Disc
—Rear	Drum incorporating leading and trailing shoes
Lining material—Front	Ferodo DS3 (Series II) / Mintex M33 (Series III onwards and Imperial)
—Rear	Ferodo DM1 (Series II) / Mintex M22 (Series III onwards and Imperial)
Brake diameters—Front (disc)	11·4 in. (28·9 cm)
—Rear (drum)	11·0 in. (27·9 cm.)
Rear brake lining width	2·25 in. (57 mm.)
Swept area—Front	122·5 in² (790 cm²)
—Rear	78·0 in² (503 cm²)
Master cylinder bore	·875 in. (22·2 mm.)
Wheel cylinder diameters—Front	2·25 in. (57·2 mm.)
—Rear	·75 in. (19·0 mm.) Series II, ·7 in. (17·7 mm.) Series III onwards and Imperial
Brake adjustments—Front	Self-adjusting
—Rear	Square-headed adjuster to the rear of back plate

WHEELS AND TYRES

Road wheels—Type	Pressed steel	
—Size	4·5J×15	
	SERIES I	SERIES II ONWARDS AND IMPERIAL
—Run-out at rim	0·08 in. (2 mm.)	0·06 in. (1·5 mm.)
—Lift at rim	0·08 in. (2 mm.)	0·06 in. (1·5 mm.)
Tyres—Rolling radius at 30 m.p.h.	13·4 in. (33·9 cm.)—Series I	
	13·2 in. (33·5 cm.)—Series II onwards and Imperial	
—Size	6·70×15	

	SERIES I AND II	
	Saloon	*Estate*
*Tyre Pressures—Front and rear 2 up ...	24 lb/in² (1·7 kg/cm²)	24 lb/in² (1·7 kg/cm²)
—Front } Fully	26 lb/in² (1·8 kg/cm²)	26 lb/in² (1·8 kg/cm²)
—Rear } laden	28 lb/in² (2·0 kg/cm²)	30 lb/in² (2·1 kg/cm²)
	SERIES III AND IV	
	Saloon	*Estate*
—Front and rear 2 up ...	27 lb/in² (1·9 kg/cm²)	27 lb/in² (1·9 kg/cm²)
—Front } Fully	27 lb/in² (1·9 kg/cm²)	27 lb/in² (1·9 kg/cm²)
—Rear } laden	27 lb/in² (1·9 kg/cm²)	33 lb/in² (2·3 kg/cm²)
	SERIES V AND IMPERIAL	
	Saloon	*Estate*
—Front	24 lb in² (1·7 kg/cm²)	24 lb in² (1·7 kg/cm²)
—Rear	24 lb in² (1·7 kg/cm²)	30 lb in² (2·1 kg/cm²)

*For prolonged touring at high speeds, the pressures in the front and rear tyres should be increased by 6 lb/in² (0·4 kg/cm² on Series I and II and 3 lb/in² (002 kg/cm³) on Series III onwards and Imperial.

BATTERY

Make	Lucas
Type	G.T.9A or B.T. 9A
Location	On wing valance under bonnet
Voltage	12
System	Positive earth
Correct specific gravity	See section N

COIL

Make	Lucas
Type	HA 12 (45054B) SERIES AND II HA 12 (45102) SERIES III ONWARDS AND IMPERIAL

DISTRIBUTOR

(See Ignition System)

GENERATOR

Make and type	Lucas C42 or C45
Location	Right side of engine
Mounting	Adjustable bracket
Drive	"V" belt from crankshaft
Control of output	C.V.C.

Performance Data
Model C45 PV-5

Cutting-in speed	1,100—1,250 r.p.m. at 13 generator volts
Maximum output	22 amps. at 1,700—1,900 r.p.m. at 13·5 generator volts (on resistance load of 0·61 ohm)
Field resistance	6·0 ohms

Model C42 and C45 PV-6—Fitted to cars after Chassis Nos.: Saloon A.8902524; A.8902332

Cutting-in speed	1,100—1,300 r.p.m. at 13 generator volts
Maximum output	25 amps. at 1,850—2,050 r.p.m. at 13·5 generator volts (on resistance load of 0·54 ohm)
Field resistance	6·0 ohms

CONTROL BOX

Make and type	Lucas RB.310

STARTER

Make and type	Lucas M418G (25521D)
Control type	Solenoid
Drive type	Lucas Type S
Lock torque	17 lb. ft. (2·35 kg.m.) at 450 amps and 7·2 volts
Brush spring tension	30—40 oz. (·90—1·13 kilos)

LIGHTING

System	Single pole
Headlamp type (SERIES I AND II)	PL.700
Headlamp type (SERIES III ONWARDS)	F.575 (Dual)
Sidelamp type (SERIES I AND II)	L.588
Sidelamp type (SERIES III ONWARDS)	L.660

LAMP BULBS

	SERIES I AND II	SERIES III ONWARDS AND IMPERIAL
Head (R.H.D.)	Lucas 404 60/36 W	Lucas 58577 (1A), 58578 (2A)
Head (R.H.D.)	Lucas 416 60/40 W from Chassis No. A.8905336 Saloon and A.8905315 Estate Car	
Head (L.H.D.)	Lucas 410 45/40 W	Lucas 58577 (1A), 58579 (2E)
Head (France)	Lucas 411 45/40 W	Lucas 58557 (1A), 58558 (2E)
Head (N. America)	Standard sealed beam unit	Standard sealed beam unit

Note.—It is important that the bulbs specified for each type of lamp are used. Otherwise the maximum anti-dazzle properties will not be obtained.

Side and front flashing indicator	Lucas 380 12v. 21/6w
Beam indicator	Phillips 12829 12v. 2w.
Ignition warning lamp	Phillips 12829 12v. 2w.
Panel illumination bulbs	Lucas 987 12v. 2·2w
Stop/Tail	Lucas 380 12v. 21/6w
Rear flashing indicator	Lucas 382 12v. 21w
Rear number plate	Lucas 989 12v. 6w or Lucas 222 12v 4w
Interior	Lucas 254 12v. 6w (festoon)
Clock	Phillips 12829 12v. 2w
Speedometer	Lucas 987 12v. 2·2w
Direction indicator warning lamp	Phillips 12829 12v. 2w
Oil warning lamp	Phillips 12829 12v. 2w

OTHER EQUIPMENT

Flashing direction indicators—make	Lucas
—type	Self-cancelling
Windscreen wiper—make	Lucas
—motor	DR.3
—type	Dual arm
—blades	Steel back rainbow
—test data	
current consumption	
—High speed 60—70 c.p.m.	2·0—2·6 amps.
—Low speed 44—48 ,, ...	2·5—3·25 amps.
—cable rack poundage ...	6 lbs.
Horn—make	Lucas (WT618)
—type	Twin Windtone
Fuses	35 amp.

ALTERNATOR (Series IV, V Police Cars and Imperial)

Diameter	6 in. (15·2 cm.)
Length—10 AC	$6\frac{3}{8}$ in. (16·2 cm.)
—11 AC	$6\frac{9}{16}$ in. (16·7 cm.)
Nominal voltage	12 v
Nominal DC output—10 AC	35 amps
—11 AC	45 amps
Maximum rotor speed	12,500 r.p.m.
No. of rotor poles	8
Stator phases	3
Phase connection	Star
Phase resistance at 68°F (20°C) ± 5%—10 AC ...	·164 ohms.
—11 AC ...	·107 ohms.
No. of field coils	1
Field coil resistance at 68°F (20°C) ± 5%—10 AC	3·47 ohms.
—11 AC	3·77 ohms.
Slip-ring brush length—New	$\frac{5}{8}$ in. (1·6 cm.)
—Renew at	$\frac{5}{32}$ in. (·4 cm.)
Brush spring test load—At $\frac{25}{32}$ in.	4 to 5 oz. (·12 to ·14 kg.)
—At $\frac{13}{32}$ in.	$7\frac{1}{2}$ to $8\frac{1}{2}$ oz. (·21 to ·24 kg.)
Assembly torque load—Brush box screws ...	10 lb. in. (·115 kg.m.)
—Diode heat sink fixings ...	25 lb. in. (·287 kg.m.)
—"Through" bolts ...	45 lb. in. (·517 kg.m.)
Test torque load—Brush box screws	5 lb. in. (·057 kg.m.)
—Diode heat sink fixings ...	15 lb. in. (·172 kg.m.)
Voltage regulator	4 TR
Warning lamp control	3 AW
Field isolating relay	6 RA
Diode test bulb	L.280 12v 1·5w

TORQUE LOADING FIGURES

ENGINE

Cylinder head (tighten when hot)	68 lb. ft.	(9·4 kg.m.)
Crankshaft (mains)	72 lb. ft.	(9·9 kg.m.)
Con. rod (big end)	36 lb. ft.	(4·9 kg.m.)

REAR AXLE

Bevel pinion coupling nut	135 lb. ft.	(18·6 kg.m.)
Differential assembly bearing cap bolts	58 lb. ft.	(8·0 kg.m.)

FRONT SUSPENSION

Fulcrum pin to crossmember—Upper	48 lb. ft.	(6·6 kg.m.)
—Lower	42 lb. ft.	(5·8 kg.m.)
Eye bolt (stub carrier to link)	55 lb. ft. 95 lb. ft.	(7·6 kg.m.) (13·1 kg.m.)
Shock absorber to spring pan	6 lb. ft.	(·8 kg.m.)
Crossmember to frame	48 lb. ft.	(6·6 kg.m.)
Road wheel nut	48 lb. ft.	(6·6 kg.m.)
Crossmember insulator to frame	16 lb. ft.	(2·2 kg.m.)
Spring pan to lower link	32 lb. ft.	(4·4 kg.m.)
Bump rubber to lower link	32 lb. ft.	(4·4 kg.m.)
Brake backing plate to steering arm	48 lb. ft.	(6·6 kg.m.)
Brake backing plate to stub axle	32 lb. ft.	(4·4 kg.m.)

STEERING

Box to frame	30 lb. ft.	(4·1 kg.m.)
Relay lever to frame	30 lb. ft.	(4·1 kg.m.)
Steering crosstube ball pins	35 lb. ft.	(4·8 kg.m.)
Relay lever to bracket	60 lb. ft.	(8·2 kg.m.)

REAR SUSPENSION

Rear spring "U" bolts	10 lb. ft.	(1·3 kg.m.)

POWER ASSISTED STEERING

Banjo bolts, pipes to pump and power cylinder	Series I to IV	23 lb. ft. (3·1 kg.m.)
	Series V	29 lb. ft. (4·0 kg.m.)

COOLING SYSTEM

CONTENTS

(8 Pages)

Page

GENERAL DESCRIPTION ... 2

RADIATOR RELIEF VALVE ... 2

DRAINING AND REFILLING THE COOLING SYSTEM ... 3

FROST PRECAUTIONS ... 4

—Without using anti-freeze ... 4

—Using anti-freeze ... 4

—Heaters ... 4

COOLING SYSTEM

—To clean ... 4

RADIATOR

—To remove and refit ... 5

THERMOSTAT

—To remove and refit ... 5

—To test ... 5

WATER TEMPERATURE GAUGE

—To check ... 6

WATER PUMP

—To remove and refit ... 6

—To dismantle ... 6

—To reassemble ... 8

COOLING SYSTEM

GENERAL DESCRIPTION (see Fig. 1)

The cooling water is circulated by an impellor type water pump of which the housing and mounting is an extension of the timing case. This pump is driven by the vee belt that also drives the generator. The radiator cooling fan is bolted to the pump driving pulley on the pump spindle.

The cooling system is not required to come into full operation until the engine has reached its normal working temperature and after starting a cold, or partly cold engine it is desirable to reach the working temperature as quickly as possible.

To accomplish this, a thermostatically operated valve known as the thermostat, is mounted in a cast body at the front end of the cylinder head. This body forms part of the hot water outlet pipe which is connected to the radiator top tank by a rubber hose.

When the engine is cold or partly cold the thermostat valve remains closed, and the water pump can only circulate the water through the cylinder head, around the cylinder jackets, into the inlet manifold jackets, and back through a small pipe to the intake side of the water pump.

After starting the engine the water temperature will rapidly rise, but circulation of the water does not commence until the thermostat opens and water commences to flow through the radiator. For operating temperatures see General Data.

When the engine is hot, the thermostat is open, and water is drawn from the radiator bottom tank by the water pump and delivered into a long gallery on the top left-hand side (nearside) of the cylinder block. From this gallery water is fed up to the cylinder head through six cast holes in the cylinder block and cylinder head so positioned that the water flows around the exhaust valve seat jackets. Six cast holes in the side of the same water gallery feed the water around the cylinder barrels after which it enters the cylinder head by 6 cast holes that pass the water around the inlet valve jackets.

Water leaves the cylinder head at the front end through the thermostat housing and passes to the radiator top tank through the top water hose.

Radiator Relief Valve (see Fig. 2)

Incorporated in the radiator filler cap is a spring-loaded relief valve which prevents water loss through the overflow pipe when the water is at normal level.

In addition this valve allows a small pressure to build up in the cooling system, which raises the boiling point of the water. This is a great advantage at high altitudes and under tropical conditions.

For pressures see General Data.

As the system cools down a partial vacuum is formed and this is relieved by entry of air through the overflow pipe and the vacuum release valve, which is built into the pressure relief valve.

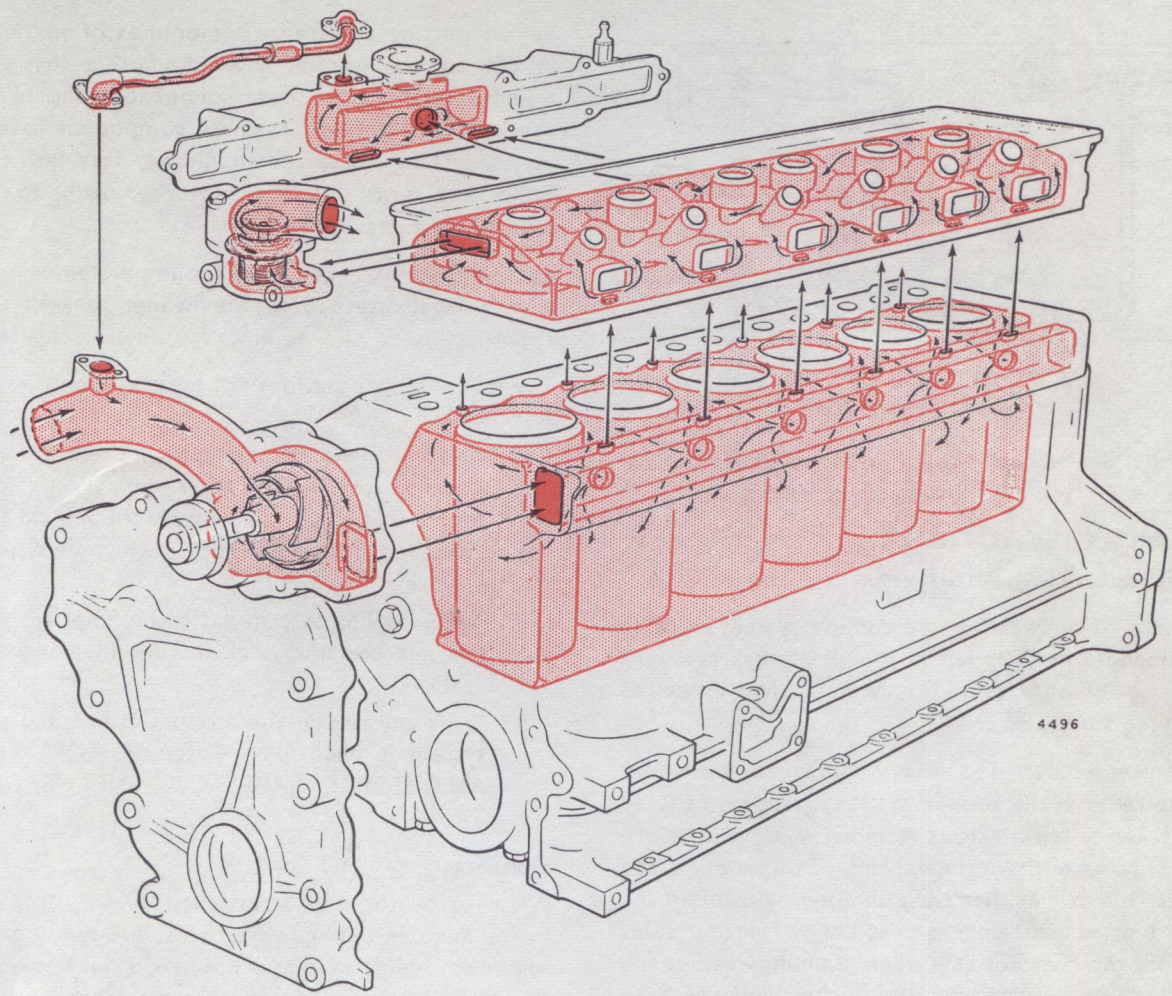

Fig. 1. *Water flow through cylinder block and cylinder head*

Draining the Cooling System

The radiator drain tap, and cylinder block drain tap are situated on the right-hand (offside) of the engine. The cylinder block drain tap must be opened as the block will not drain with only the radiator drain tap open. Where a car heater is fitted the temperature control should be set to the HOT position.

Refilling the Cooling System

Whenever possible, clean rain water or softened water should be used in preference to tap water.

As the car heater unit is higher than the radiator filler cap level the following precautions are necessary when refilling a completely empty cooling system.

The temperature control must be set to the HOT position and the radiator filled in a normal manner.

The engine should then be started and the heater outlet pipe connection slackened off on the water control valve to allow air to be displaced as the heater system fills. Immediately water appears at the slackened connection it should be tightened.

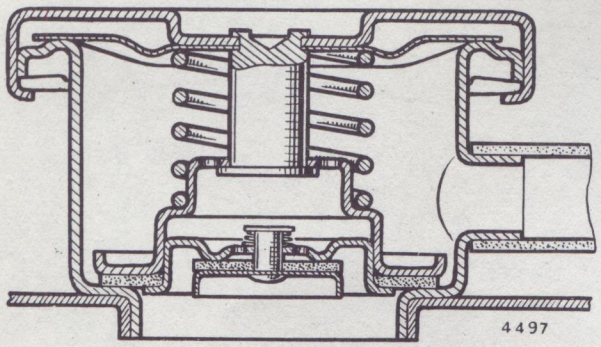

Fig. 2. *Radiator relief valve*

Finally, the radiator should be topped up to replace the water that has filled the heater system.

FROST PRECAUTIONS

Without using Anti-freeze

During frosty weather the cooling system must be drained if the car is left in an unheated garage, care must be taken to drain the cylinder block as well as the radiator.

When the car is used in very cold weather without anti-freeze in the cooling system, great care should be taken to ensure that the radiator is warm before attempting to drive the vehicle. If this is neglected there is a danger that the radiator may freeze if the car is driven in temperatures below freezing point before the thermostat is open. In cold weather the bottom of the radiator should be blanked off so that bottom tank keeps warm, because it is here that freezing commences.

Using Anti-freeze

To avoid the possibility of the cooling system freezing whilst the vehicle is stationary, or whilst being driven in very cold weather, it is recommended that an anti-freeze mixture is used, and added in the quantities recommended by the anti-freeze manufacturers.

We recommend anti-freeze mixture based on inhibited ethylene glycol. Mixtures using alcohol as a base are not suitable, as this will cause loss of anti-freeze by evaporation.

Before putting anti-freeze compounds of any kind in the cooling system, it is imperative that the cylinder head and all hose connections should be checked for tightness, as these compounds have a very searching effect and should any leak into the sump, very serious damage may occur owing to the possibility of engine seizure.

Cars with anti-freeze in the cooling system should have a label attached to the header tank of the radiator, under the bonnet, to indicate the fact.

The following precautions are necessary on cars so marked:—

(*a*) Never fill the radiator up to the overflow. Leave space for the natural expansion of the mixture to avoid unnecessary topping up and consequent dilution. Top up when the system is warm.

(*b*) If the cooling system has to be emptied, run the mixture into a clean container and use again.

(*c*) If for any reason the mixture is lost and the system is filled with water, REMOVE THE ANTI-FREEZE LABEL ON THE HEADER TANK.

Heaters

Where a heater unit is installed, a reliable anti-freeze mixture must always be used, because even when the cooling system is drained, a small amount of water remains in the heater unit. If this water freezes the heater will be seriously damaged.

(See also under "Refilling the cooling system".)

COOLING SYSTEM

To Clean

Periodically the entire cooling system should be cleaned, particularly in districts where, contrary to instructions, water having a high content of lime has been used for replenishing the radiator.

Remove the radiator filler cap.

Open drain tap in bottom tank of radiator (or preferably remove the tap complete), when engine is still hot; also open or remove tap from left-hand side of cylinder block.

Allow time for engine to cool after all water has drained off. When cold, flush radiator through to remove all loose sediment by means of a hose inserted in the filler neck.

Fill system to normal level with a solution of flushing compound (several reliable brands of which are available) and run the engine as directed by the makers of the compound.

It is important to drain off the flushing compound directly it has been used for its recommended period.

Finally, flush the system thoroughly with running water by means of a hose, turn off drain taps and fill system to normal level with soft water or anti-freeze mixture as required.

When using flushing compounds it is important to avoid splashing the paintwork of the car as they can have an injurious effect.

In very dusty conditions, and where insects are numerous, the radiator tube system should be kept clean by blowing through with compressed air from the engine side.

RADIATOR

To remove and refit

Drain cooling system.

Disconnect top and bottom water hoses.

Remove six fixing bolts that secure radiator to the baffle plates. There are three bolts each side.

A furred radiator which is removed from a vehicle during overhaul should not be allowed to dry out, as when this occurs, the deposit inside will set hard and will not soften when the radiator is refilled and used again. Always cleanse the radiator immediately and whilst still wet inside, or seal up the apertures and fill with water pending treatment. Alternatively, the radiator can be left immersed in a suitable tank of water.

Do not invert the radiator or lay it flat as this allows any sediment which has accumulated in the bottom tank to pass into the cooling ducts. Always store the radiator in its normal upright position.

Replacement is made in reverse order. Fixing bolts and their cage nuts should be lubricated with thick oil to prevent rusting of the bolt threads.

THERMOSTAT

To remove and refit

Drain radiator to below thermostat level.

Disconnect water hose connecting thermostat housing to radiator top tank.

Remove two nuts securing thermostat cover housing and lift out thermostat.

If the thermostat valve is found open on removal it may be assumed that it is defective and a new unit should be fitted.

When refitting, a new joint should be used between the thermostat cover housing and the housing into which the thermostat is fitted.

To Test

Suspend unit in a vessel of water with a reliable thermometer.

Heat the water slowly, noting the thermometer reading and stirring the water continually.

For thermostat valve opening temperatures see General Data.

Thermostats are sealed and their setting and manufacture is specialised work. Always renew if doubt exists. If a replacement is not immediately available, it should be left out, as a faulty unit could cause serious overheating.

WATER TEMPERATURE GAUGE

This instrument is electrically operated and consists of two units, which are the temperature element in the thermostat housing and the temperature gauge in the instrument panel. These units are connected by a single insulated wire in the wiring harness, and temperature is only recorded when the ignition is switched on.

It is most important that the interconnecting cable between the gauge and the temperature element should not be shorted to earth when the ignition is switched on. If this occurs the temperature gauge winding will burn out and for this reason the battery should be disconnected or the end of the lead insulated when it is removed from the element terminal.

Removal of Element

Drain the radiator low enough to allow removal of element without loss of water or anti-freeze.

Disconnect battery.

Pull the insulated lead off element terminal.

Unscrew, and remove element.

Removal of Temperature Gauge

Two electrical leads have to be disconnected and the two knurled instrument fixing nuts removed to allow the instrument head to be lifted out of the instrument panel.

To Check Temperature Gauge Reading

Remove the temperature element and earth its outer body to the thermostat housing and switch on the ignition. Immerse the element in a small container of almost boiling water and take the temperature of this water with a reliable glass thermometer. A comparison of the glass thermometer reading with the instrument reading will show if the latter is reasonably correct.

WATER PUMP

Reconditioned water pumps are available.

To remove and refit

Drain cooling system and remove radiator.

Slacken generator mounting bolts and remove fan belt.

Remove the four bolts securing fan blades and fan pulley to the pump spindle boss.

Disconnect heater hose (if fitted).

Disconnect bottom water hose connected to the pump inlet.

Disconnect by-pass pipe by removing the two nuts holding the pipe flange to the pump intake.

Remove bolts and nuts securing water pump to timing case and remove water pump.

To dismantle

A sectional view of the water pump is shown in Fig. 3. The impellor and fan pulley centre are a press fit on the pump spindle which forms part of a specially constructed shaft and bearing unit.

The bearing unit is lubricated in manufacture only.

There is no provision for renewal of the lubricant in service. It is therefore most important not to wash the complete pump in petrol (gasolene), paraffin (kerosene) or any other form of cleaning fluid, as these would enter the bearing and destroy the lubricant. Cleaning of the pump body should be left until the pump is dismantled.

The pump should be dismantled in the following manner:—

1. Remove bearing locating screw. See Fig. 3.
2. Support pump body and press on spindle at the impellor end. This will bring the impellor against the pump body and allow the spindle to be pressed out of the impellor and housing leaving the water seal in position.

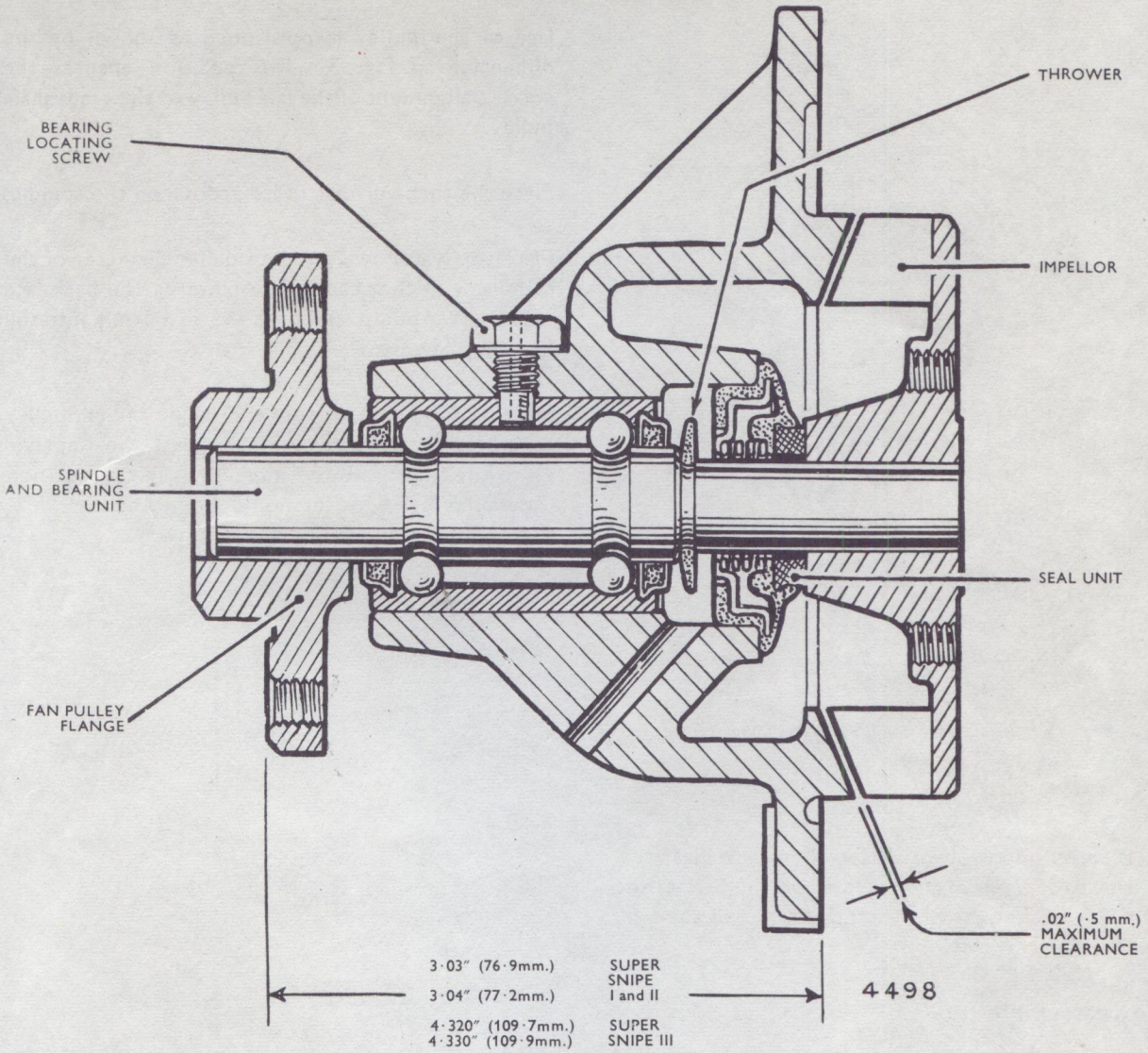

Fig. 3. *Sectional view of water pump*

3. Lift the water seal out of the pump body.

4. Carefully examine the spindle and bearing unit. If the bearing shows any signs of wear, or roughness when rotated, the fan pulley centre should be supported on its underside and the spindle pressed out.

5. Clean out all deposits from the pump body and inspect this item. If there are any signs of wear or deterioration in the bearing bore, or the face immediately behind the impellor, the housing should be renewed.

The water seal has a carbon face mounted in a rubber housing. This face is held against the machined face on the rear of the impellor by a spring in the rubber housing of the seal. If either of these parts are worn, or if the pump is leaking these parts should be renewed.

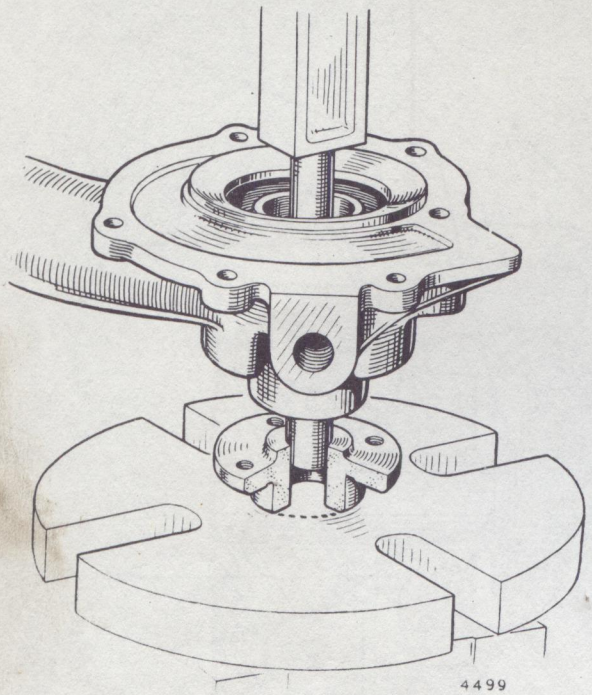

Fig. 4. *Pressing pump spindle into fan pulley centre*

It is most important to have a smooth flat face, square to the axis of the spindle, on the part of the impellor in contact with the carbon face of the seal.

To reassemble

Place the bearing unit in the pump body with the larger diameter of the spindle to the front of the housing, lining up the locating hole in the bearing with the threaded hole in the pump body.

Replace the bearing locating screw in the top of the pump body.

Place the fan pulley centre on a press table and press the larger diameter of the spindle into the pulley centre, as illustrated in Fig. 4, until the front face of the pulley is positioned as shown by the dimension in Fig. 3. This position ensures the correct alignment of the fan pulley to the crankshaft pulley.

Place the thrower disc in its groove on the spindle.

Place the water seal on the smaller diameter of the spindle with the carbon face towards the back face of the water pump, and push the seal firmly into the housing. See Fig. 3.

Support the pump spindle end inside the fan pulley centre as shown in Fig. 5 and press the impellor on to the shaft until the impellor is in the position shown in Fig. 3. It should be noted that ·02" (.35 mm.) is the maximum clearance.

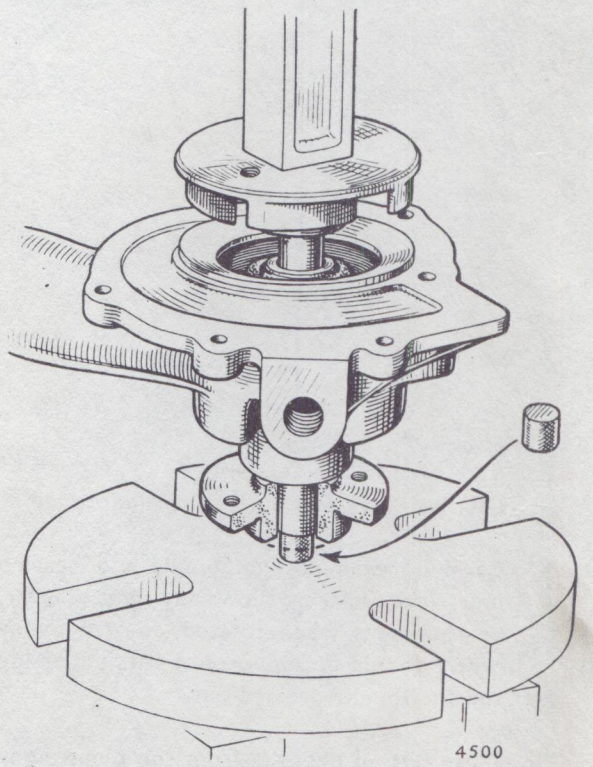

Fig. 5. *Pressing pump impellor on to pump spindle*

ENGINE

CONTENTS

See also General Data at the beginning of this manual; Section P (Recommended Lubricants) and Section N (Electrical Equipment)

The special tools mentioned herein are obtainable from Messrs. V. L. Churchill & Co. Ltd., Great South West Road, Bedfont, Feltham, Middlesex

UNIFIED THREADS ARE EXTENSIVELY USED ON THIS ENGINE AND THE APPROPRIATE SPANNERS ARE REQUIRED

GENERAL DESCRIPTION ... 9

LUBRICATION SYSTEM

Description of lubrication system ... 11
Oil filter—operation ... 12
—to renew element (*renewable element type*) ... 12
—to change filter (*throw-away type*) ... 57
Oil pressure relief valve ... 13
Oil pressure ... 13
Reasons for low oil pressure ... 13
Crankcase oil dilution ... 14
Oil sump—to remove and refit ... 14
Oil pump—description ... 15
—to remove and refit ... 15 and 16
—intake filter, to clean ... 15
—to dismantle and overhaul ... 15

ADJUSTMENTS

Sparking plugs—to remove ... 17
—examination and cleaning ... 17 and 18
—to refit ... 19
—H.T. leads ... 19
Valve rockers—adjusting clearances ... 19
Distributor—contact breaker adjustment—See Section N
Ignition timing—vernier adjustment ... 20
—to check ... 22
—to check with stroboscopic timing light ... 23
—road performance test ... 24
Generator—to adjust belt tension ... 24
Carburettor—See Section C

EXHAUST MANIFOLD

To remove and refit 24

INLET MANIFOLD

To remove and refit 25

CLOSED CRANKCASE VENTILATION SYSTEM

Description and servicing 55

COMPRESSION PRESSURES 25

CYLINDER HEAD AND VALVE GEAR and TOP OVERHAUL 25

Rocker shaft—removal 25
—details 26
Rocker standard—details 27
Rocker assembly—details 27
Push rod—removal 27
Cylinder head—to remove and refit ... ... 27 and 33
Replacement cylinder heads 34
Decarbonising 27
Valve—to remove 28
Examination of valves—valve guides and springs 28
Valves—to reface 29
Valve guides—to renew 30
Valve seatings—to recut 31
Valve seat inserts—details 31
Valves—to grind in 32
—to replace 33
Final adjustments 34

TIMING COVER

To remove 35
To renew oil seal 35
To refit 35

TAPPETS

To remove and refit 35

TIMING WHEELS AND TIMING CHAIN

To remove 36
To refit 36
Checking valve timing 37
Timing chain automatic tensioner 38
—details of operation 38
—to remove tensioner 38
—to replace tensioner 38

CAMSHAFT
To remove ... 38
To renew bearings ... 39
To replace ... 39
Camshaft end float ... 40

PISTON AND CONNECTING ROD ASSEMBLIES
Description ... 40
To remove pistons and connecting rods ... 41
To refit pistons and connecting rods ... 41
To remove gudgeon pin ... 41
Connecting rod alignment ... 41
Gudgeon pin fits ... 41
Delapena precision honing machine ... 41
Honing little end bush ... 42
Honing piston bosses ... 42
Piston rings—details ... 43
—to fit ... 44
—chromium plated top piston ring ... 44

PISTONS
Differences ... 44
Piston and cylinder bore grading ... 45
Grade indication letters ... 45
Fitting pistons to cylinders ... 45
To measure piston clearances ... 46
Oversize pistons ... 46

CYLINDER BLOCK
To rebore and fit new pistons ... 46
Standard and oversize cylinder bore diameters ... 46
To fit cylinder liners ... 47
Core plugs ... 47

BIG END BEARINGS
To renew ... 47

MAIN BEARINGS
Differences ... 47
To renew ... 48
Crankshaft end thrust ... 49

CRANKSHAFT
To remove ... 50
To refit ... 50
Spigot bush—to remove ... 52

FLYWHEEL

To remove and refit 51
Starter ring—to renew 52

STARTER

To remove 53

ELECTRICAL EQUIPMENT—See Section N for details other than given below

Distributor—to remove and refit or fit replacement unit 53
Ignition timing—to check 22
—to check with stroboscopic timing light 23
Generator—to adjust belt tension 24
Starter—to remove and refit 52

ENGINE

To remove 54
To refit 54

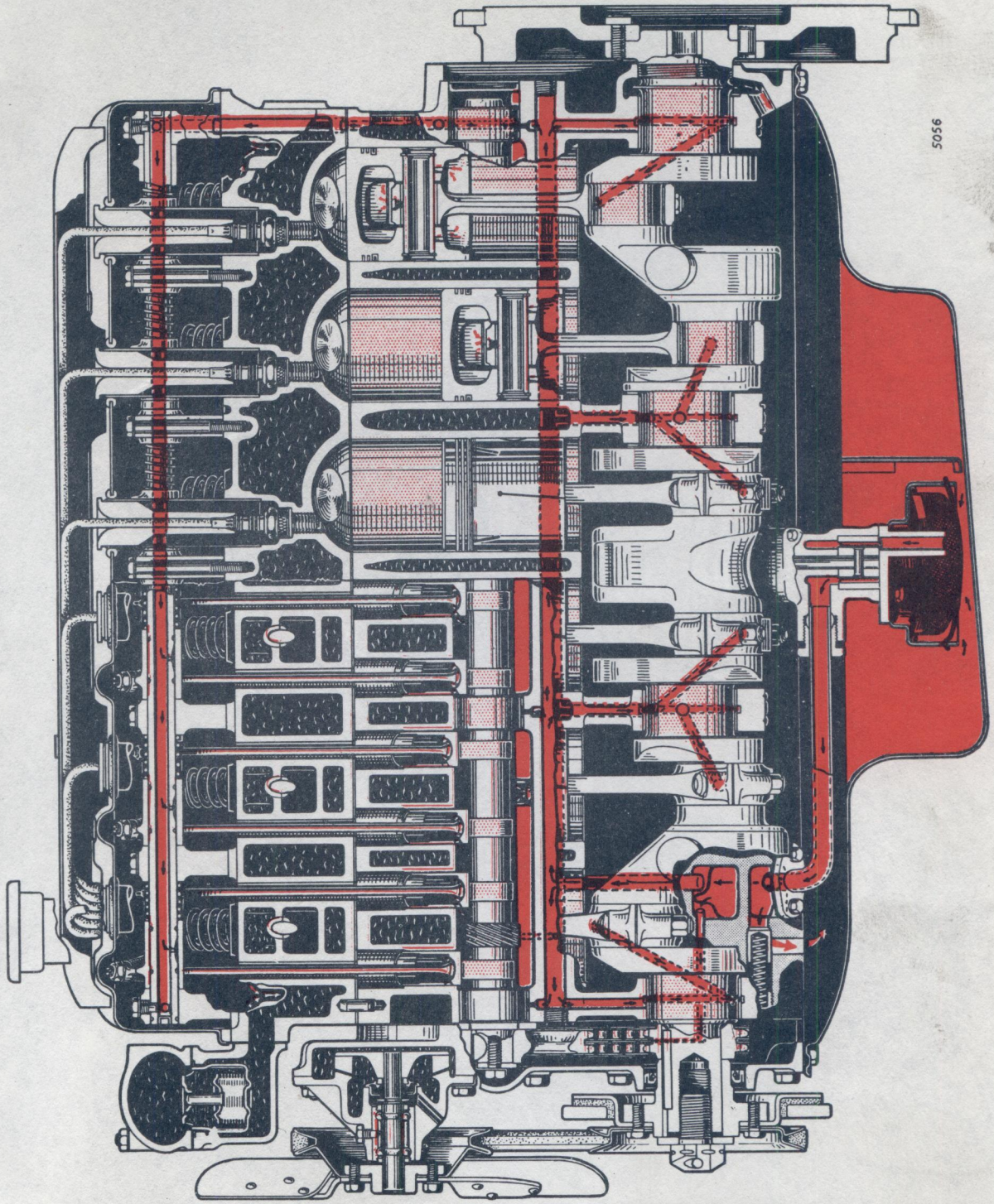

Fig. 1. *Engine—Longitudinal section—Series II and III pistons and Series I and II water pump bearing shown*

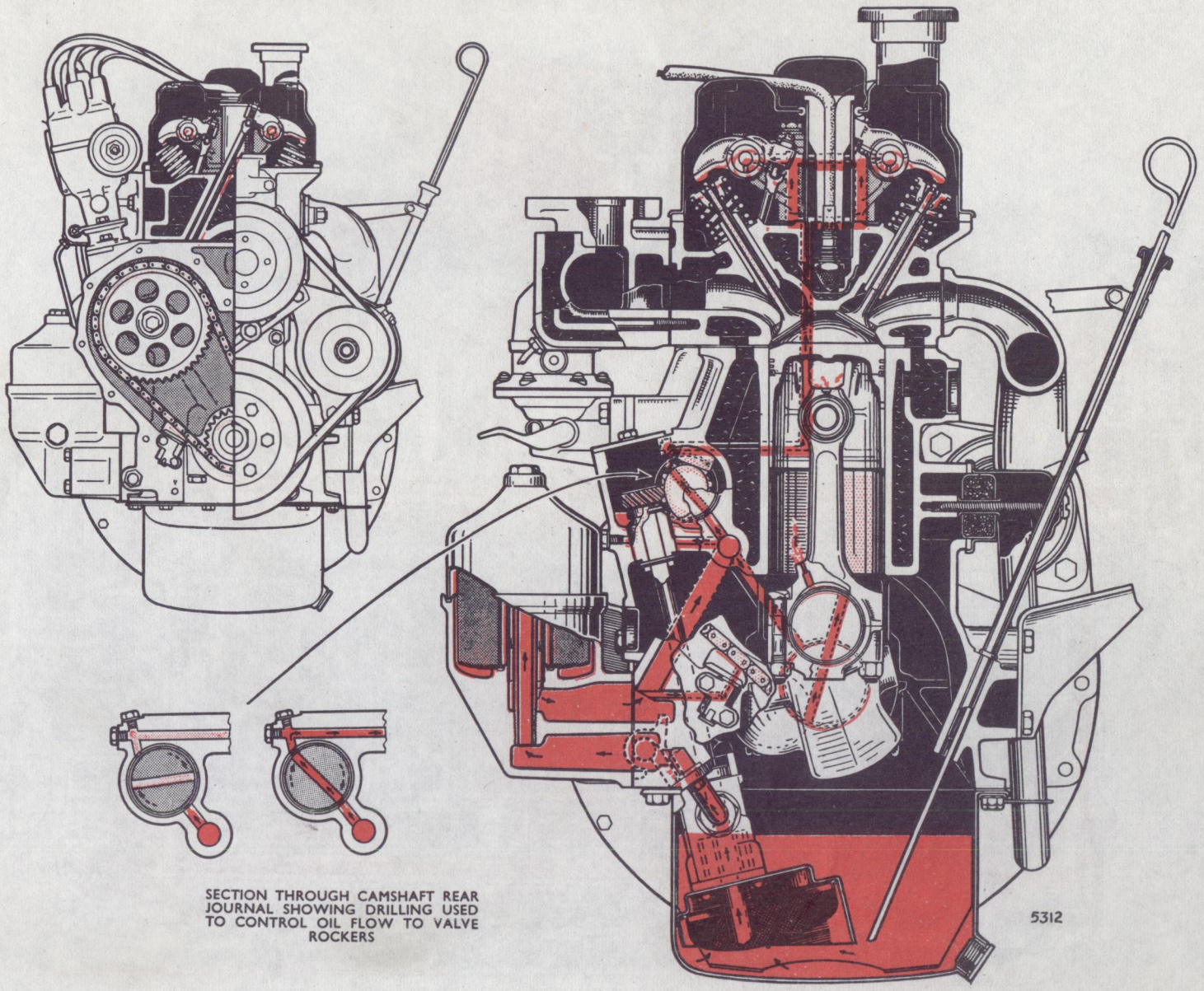

Fig. 2. *Engine—Cross section—Series II and III pistons and Series I and II distributor shown*

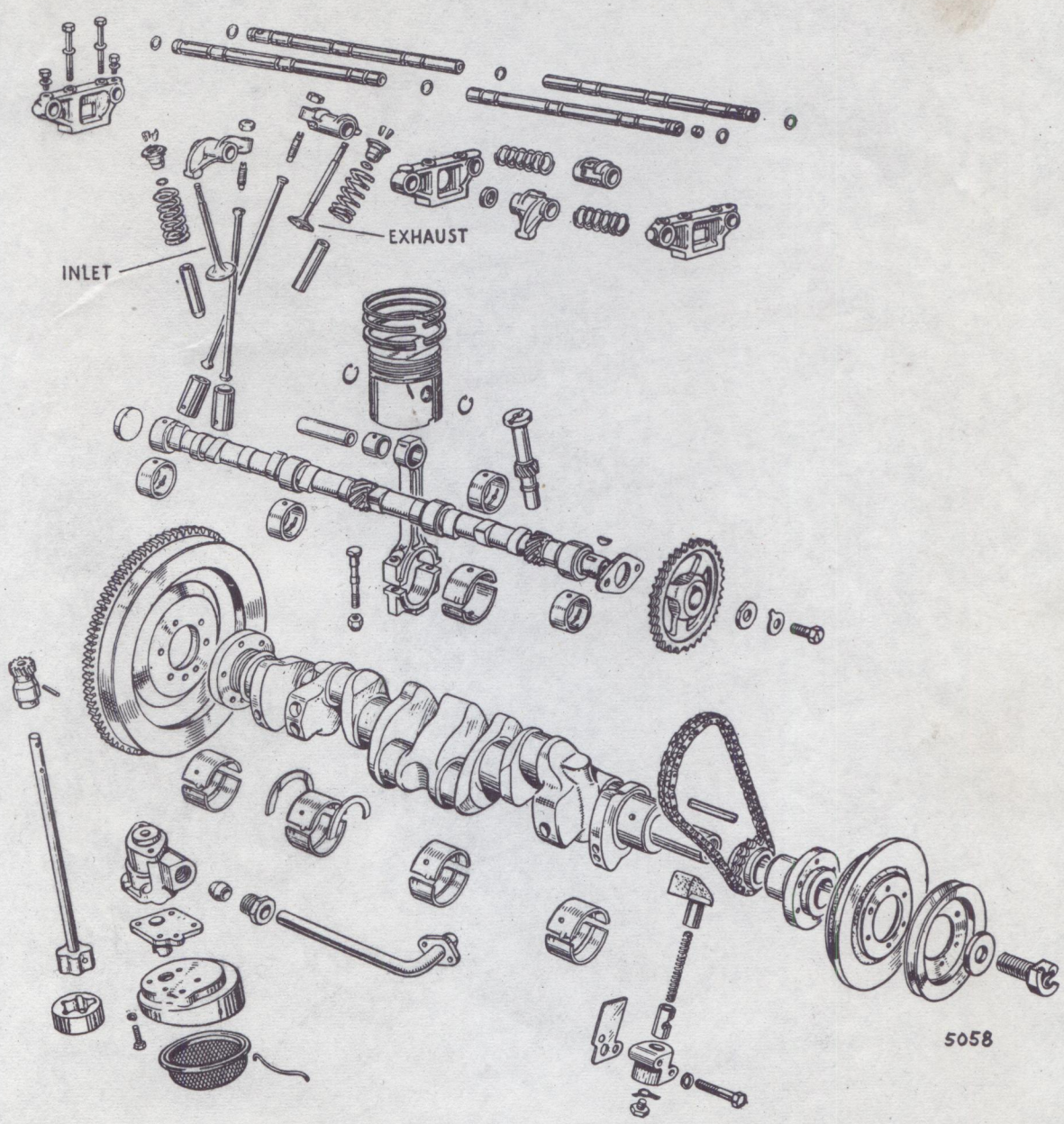

Fig. 3. *Engine—Exploded view of working parts—Series II and III pistons shown—From Series IV dual valve springs are fitted*

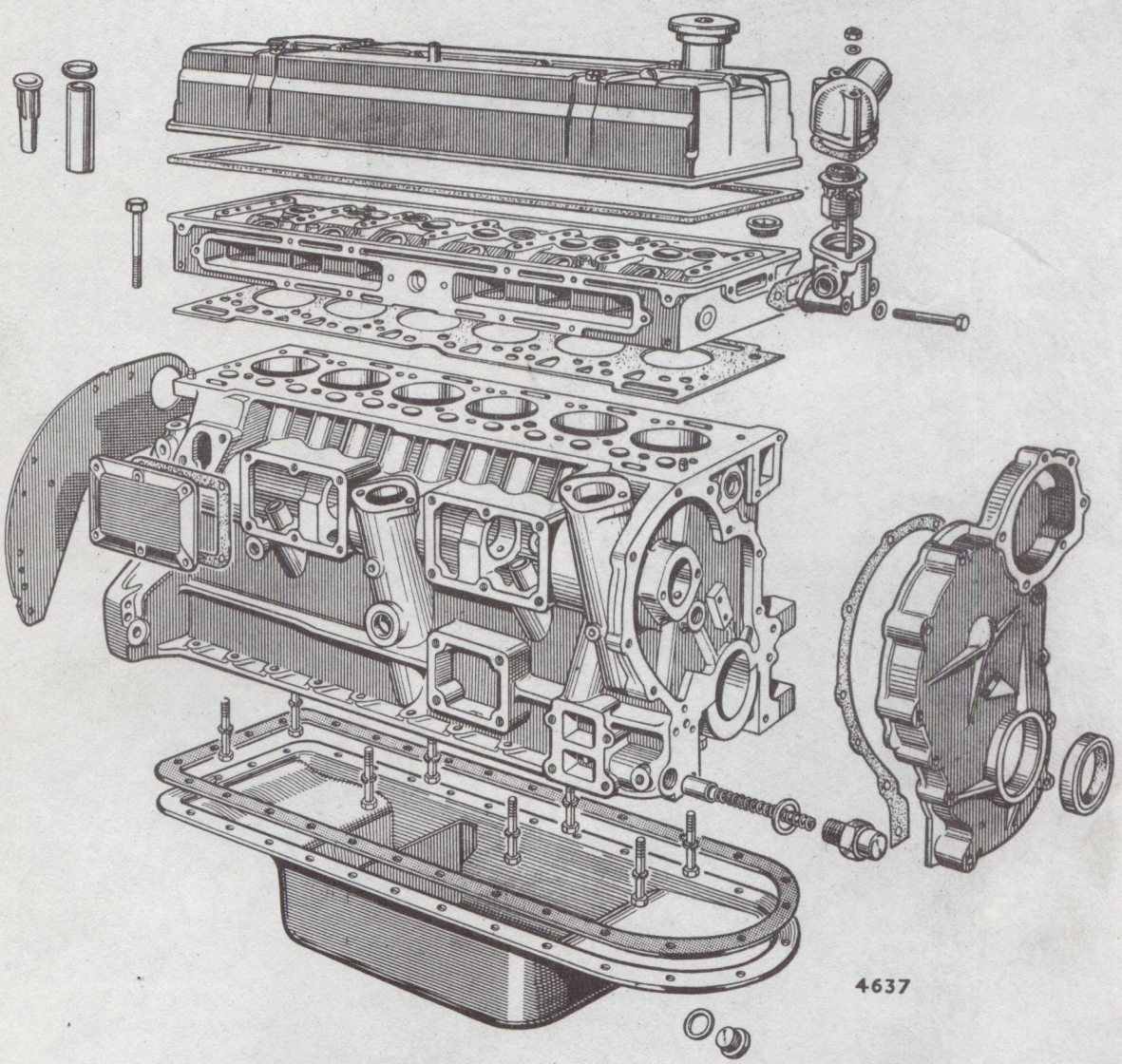

Fig. 4. *Engine—Exploded view of cylinder block and associated parts—Series I and II cylinder block shown Series III is similar except for distributor mounting position which slopes forward*

ENGINE

The information given in this section is arranged under headings following the usual order in which engine service and repair work will be carried out. If information on a particular item is required it will be found by reference to the index on page 1 under an appropriate heading. For instance, push rods or valve springs are given under CYLINDER HEAD and VALVE GEAR.

All data such as piston and bearing clearances, torque wrench figures, etc., are given in the GENERAL DATA SECTION at the beginning of this manual.

GENERAL DESCRIPTION

Examination of the longitudinal and sectional views of the engine in Figs. 1 and 2 will show that the engine design follows normal well tried practice. The following points, however, are of particular interest.

The overhead valves are inclined at an angle of 62½° and operate in hemispherical combustion chambers. This form of combustion chamber allows larger valves to be used with port passageways that give a very free flow of mixture into the cylinders and hence give good volumetric efficiency.

The camshaft driving chain is tensioned by a coil spring and oil operated tensioner, the rubbing face of which is neoprene to give silent action without wear.

A constant oil level is maintained in the camshaft compartment and this oil provides immediate lubrication of the cams and tappet directly the engine begins to rotate.

The distributor and oil pump are driven by separate gears on the camshaft which allows the oil pump to be removed without affecting the ignition timing.

The little end of the connecting rod is bushed. This prevents excessive side loading of the piston when the engine is cold, as gudgeon pins need to be a firm fit in the piston at this temperature.

The top face of the cylinder head is below the rocker cover joint face. This prevents oil accumulating by the rocker cover joint and ensures freedom from oil leaks.

Easy removal of the spark plugs is made possible by the use of a box spanner fitted with a spring circlip which grips the spark plug when it is unscrewed so that it is lifted out as the box spanner is withdrawn.

Another point of interest is the crankshaft vibration damper, fitted immediately behind the crankshaft pulley. The damper ensures smooth running of the engine within the engine speed range.

A full flow oil filter is fitted which is described on page 12.

Twin exhaust manifolds are used. The inlet manifold is provided with a water jacket in its centre section which is heated by hot water passing from the cylinder head to the suction side of the water pump during the warming up period when the thermostat is closed. This gives rapid warming up of the inlet manifold after starting the engine and maintains a constant inlet manifold temperature which gives more stable combustion and idling.

DIFFERENCES—Series I, II, III and IV

Series I engines have a capacity of 2·6 litres (2691 c.c.) and Series II, III and IV engines, 3 litres (2951 c.c.).

On Series III engines the following changes were made:—

1. Cylinder block altered to give a different angle of inclination to the distributor.
2. Indium flashed copper lead bearings fitted to the front and two intermediate main bearings only. A white metal bearing is still used for the rear main bearing.
3. The oil pump drive gear on the camshaft altered to increase the oil pump speed to give a greater output from the oil pump. The distributor drive gear has also been altered to accommodate the changed position of the distributor.

On Series IV engines the following additional changes were made:—

1. Closer fitting solid skirt pistons are used in place of the previous split skirt pistons. SEE GENERAL DATA under PISTON and TO MEASURE PISTON CLEARANCE on page 46 of this section.
2. Larger inlet valves used.
3. Dual valve springs fitted on all valves.
4. Crankshaft pulley with additional groove to allow twin vee belt to air conditioning compressor when fitted.
5. Different flywheel to take the Diaphragm type clutch.

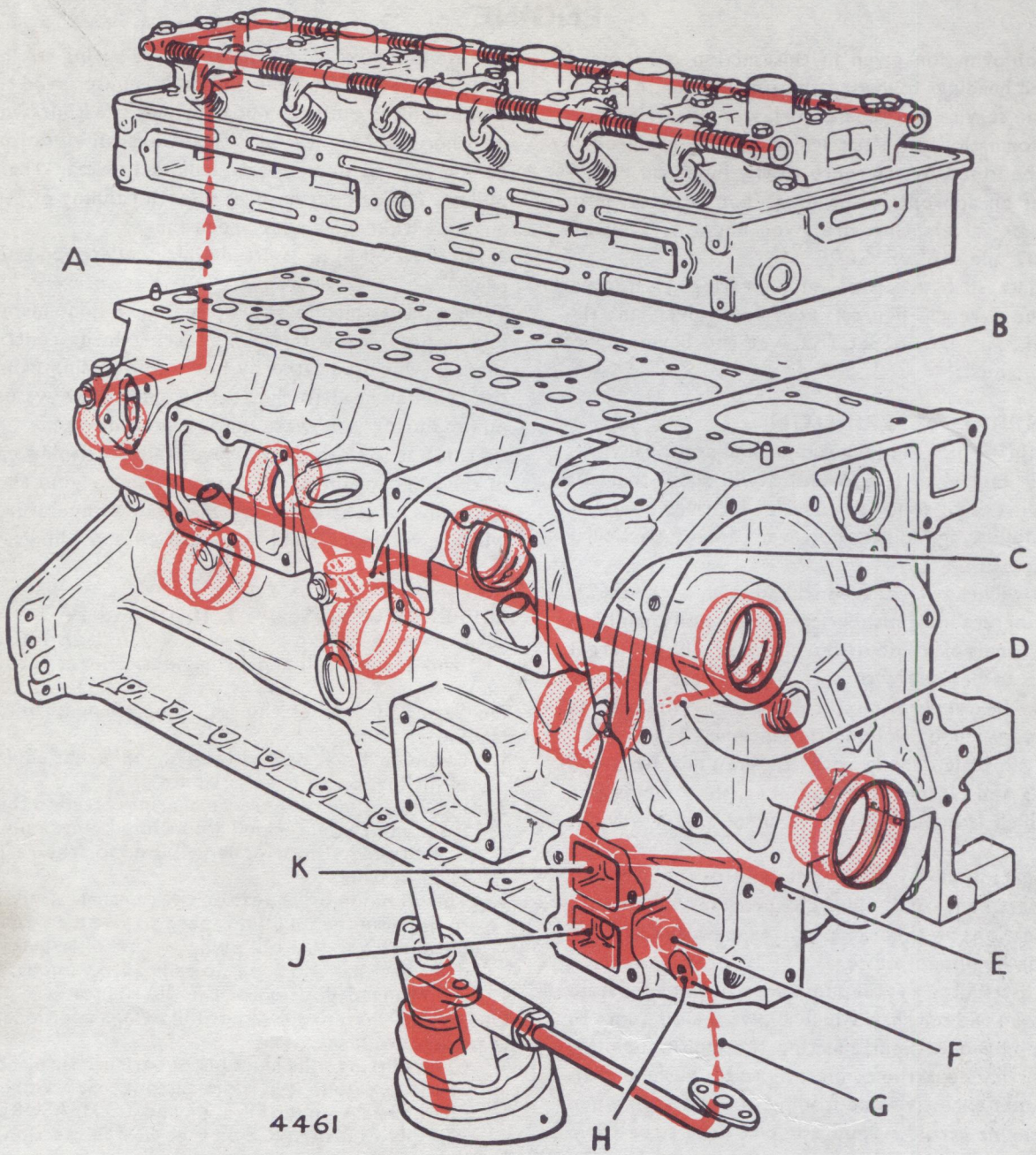

A. Oil feed to valve gear
B. Oil feed to oil pump gears
C. Oil gallery
D. Oil feed to distributor drive
E. Oil feed to timing chain tensioner
F. Relief valve
G. Oil feed from oil pump to filter
H. Discharge from oil pressure relief valve
J. Oil feed to oil filter
K. Oil feed from oil filter

Fig. 5. *Oilways in cylinder block and cylinder head.*

Compression Ratios

As fuel requirements vary in certain export territories, different compression ratios are used. These are obtained by using sets of pistons having different compression heights. Full particulars are given in the Data Section, under PISTON, of the different compression ratios, compression heights and identifying numbers. The latter are stamped on the piston crown.

LUBRICATION SYSTEM

Figs. 1 and 2 show the direction of oil flow by black arrows printed on the red colour, which represents the oil. A more detailed view of the oil passageways, particularly in the cylinder block is given in Fig. 5.

Lubrication of all working parts is effected by a forced feed oil system in which all the oil passes through a full flow oil filter before reaching any bearings. A Hobourn Eaton oil pump is used and this pump is driven by spiral gears on the camshaft.

The pump draws oil from the sump through a gauze filter fitted to the bottom of the pump and delivers all the oil through a short internal pipe to the full flow oil filter situated on the right-hand side of the engine. From the filter the oil passes into a gallery, drilled in the cylinder block on the same side of the engine as the filter.

As the oil pump output is in excess of the quantity of oil that can pass through all the bearings, an oil pressure relief valve is fitted at the front end of the gallery to prevent building up of excessive oil pressure. At all speeds other than idling and fast idling, this relief valve is lifted off its seat against its return spring, and this controls the oil pressure to a predetermined maximum figure. When the engine speed is reduced below that at which the oil pressure relief valve operates, the oil pressure falls until at idling speed it may be only 7—10 p.s.i. (0·49—0·70 kgs. per sq. cm.).

Four $\frac{5}{16}$" (7·93 mm.) diameter holes from the oil gallery provide oil feeds to the top halves of the main bearings and bottom of the camshaft bearings.

Each camshaft bearing shell has a $\frac{1}{8}$" dia. (3·17mm.) hole through which oil is fed to the bearing surfaces.

This prevents loss of oil pressure when the camshaft bearing clearances increase after a very high mileage as the small holes act as metering holes and control the amount of oil passing to the camshaft bearings.

Drillings in the crankshaft, from the main bearing journals to the big end journals, feed oil to each big end bearing.

The little end bearing, gudgeon pin, and cylinder walls are splash lubricated by the oil leaving the big end and main bearing journals.

The cylinder walls are also lubricated by an oil jet hole in the connecting rod which squirts oil on the maximum thrust side of the cylinder wall as the connecting rod passes over T.D.C.

The timing chain is lubricated by oil fed through a hole in the chain tensioner neoprene rubbing face.

Surplus oil from the timing case drains into the front end of the sump.

Oil fed to the valve rocker gear is taken from the camshaft rear bearing through a drilling in the camshaft rear journal which acts as a rotary metering device to the oil passing to the rocker gear. The oil flow occurs twice every camshaft revolution, while the journal drilling connects the bearing oil feed hole and the oil hole feeding the rocker gear. See Fig. 2.

By this means a controlled quantity of oil is fed at a lower pressure to a recess in the base of the rear rocker standard. From this recess the oil flows up the annular space around the two standard fixing bolts, to a cross drilling in the standard and feeds the two rocker shafts. A similar drilling connects the rocker shafts in the front standard and copper washers are used under the front and rear rocker standard fixing bolt head to prevent oil leakage.

$\frac{3}{32}$" diameter (2·38 mm.) drillings in the rocker shafts facing downwards, feed oil to the circular grooves feeding two holes in the rockers. These holes feed oil to the rocker faces in contact with the valve stems and to the push rod cup ends.

Oil falling from the rocker gear drains from the cylinder head into the camshaft compartment through a drain hole at its rear end. A drain hole is also provided at the front end so that draining can occur when the engine is lowest at the front end as when descending a steep hill.

The tappets that actuate the push rods are lubricated by oil thrown up by rotation of the cams and by oil running down the push rods and draining from the cylinder head top face.

A sufficient depth of oil is maintained in the camshaft compartment so that the cams dip in oil directly the engine rotates. Excess oil drains from the camshaft compartment through two large drain tubes, the height of which controls the depth of oil.

The oil pump driving and driven gears are lubricated by oil which is squirted up from a groove cut partly down the oil pump driven gear body. This groove allows oil supply once every pump revolution, as it passes an oil feed hole from the oil gallery. Fig. 2 illustrates the groove on the pump gear in the position where it allows oil to pass to the gears.

OIL FILTER

Operation

Normally the oil from the oil pump passes through the filter element before reaching the bearings. This element should be changed regularly at the recommended mileage. No attempt should be made to clean it. If the filter element is not changed it eventually clogs up and in order to prevent excessive oil pressure on the input side of the filter, and to ensure oil supply to the bearings, a filter by-pass relief valve is fitted. This valve allows oil feed direct from the pump to bearings when the pressure drop across the element exceeds 13 to 17 lbs./sq. in. (0·91 to 1·19 kg./sq. cm.). Figs. 6 and 7 show details of the filter and by-pass valve. The construction of the filter is such that it cannot drain when the engine is stopped.

To renew element

A drain plug is fitted to the bottom front end of the filter housing. This plug should be removed and the oil in the filter housing drained off before removing the filter element.

The filter element is removed after undoing the hexagon bolt head on the filter cover and removing the cover cap.

The new element can be inserted either way up and the new rubber sealing ring supplied with the element should be used to replace the old rubber joint in the filter unit lower body.

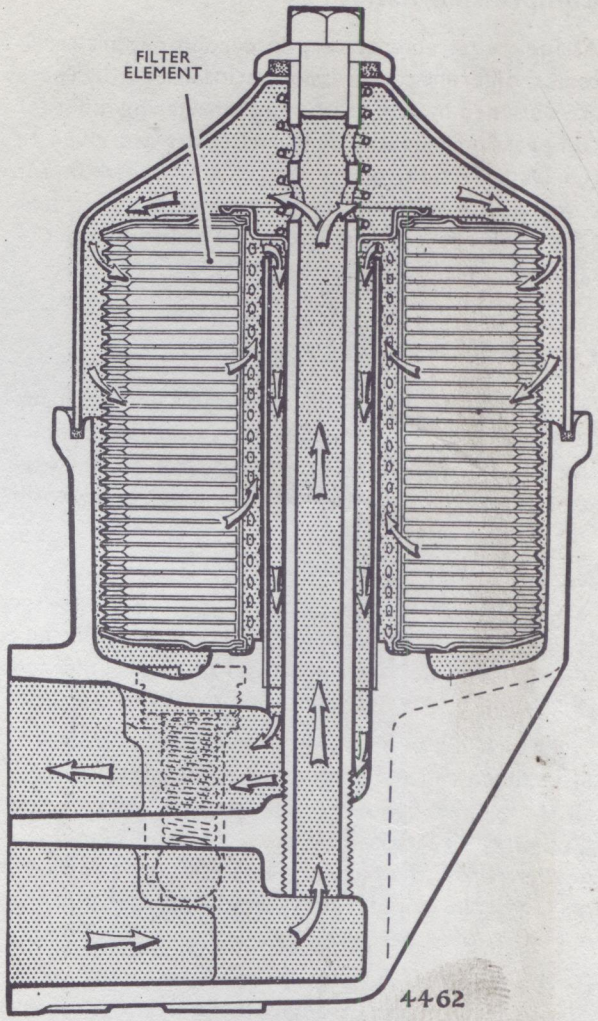

Fig. 6. *Sectional view of oil filter*

OIL FILTER—Throw away type (See page 57)

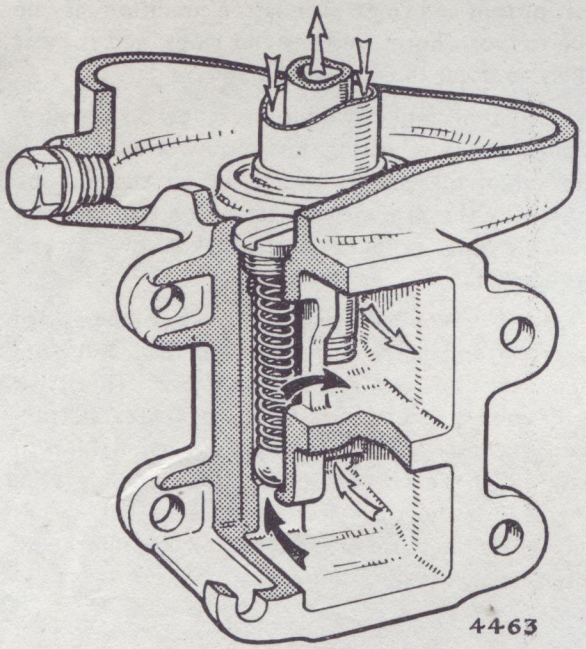

Fig. 7. *Sectional view showing oil filter by-pass valve*

OIL PRESSURE RELIEF VALVE

See Fig. 8

The oil pressure relief valve is of the non-adjustable type. Its setting is carefully made at the Factory and should not require any alteration. It is situated at the front end of the engine on the lower right-hand side, and may be removed by unscrewing the hexagon-headed cap nut.

Loss of pressure may sometimes be traced to the presence of foreign matter between the spring-loaded valve face and the valve seating.

In refitting the relief valve, the spring should first be placed in the cap nut, then the valve put on the projecting end of the spring, and the whole assembly inserted in the cylinder block and screwed home. Make sure that the joint washer is in place on the cap nut.

Never attempt to increase oil pressure by stretching the spring. If required, the strength of this spring can be checked by comparing its compressed length to the figures given in General Data under ENGINE —Oil Pressure Relief Valve Spring.

OIL PRESSURE

Oil pressure may vary considerably according to engine temperature, grade of lubricant, and condition of engine and oil pump. Normally the pressure should be 45—50 lbs. per sq. in. (3·1—3·5 kg. per sq. cm.) at 50 m.p.h. (80·5 k.p.h.) minimum. Tick-over pressure is not critical and the condition of the engine should be judged by its normal running pressure. At normal tick-over speed an oil pressure of 7 to 10 lbs. per sq. in. (0·49—0·70 kgs. per sq. cm.) would be satisfactory with the engine hot—160°/170°F. (70°/75°C.).

REASONS FOR LOW OIL PRESSURE

If abnormally low oil pressure is shown on the gauge, it may be due to one of the following reasons:—

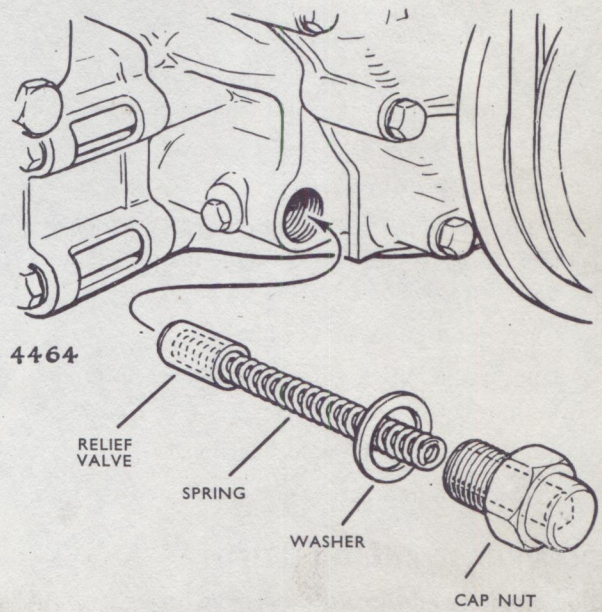

Fig. 8. *Oil pressure relief valve*

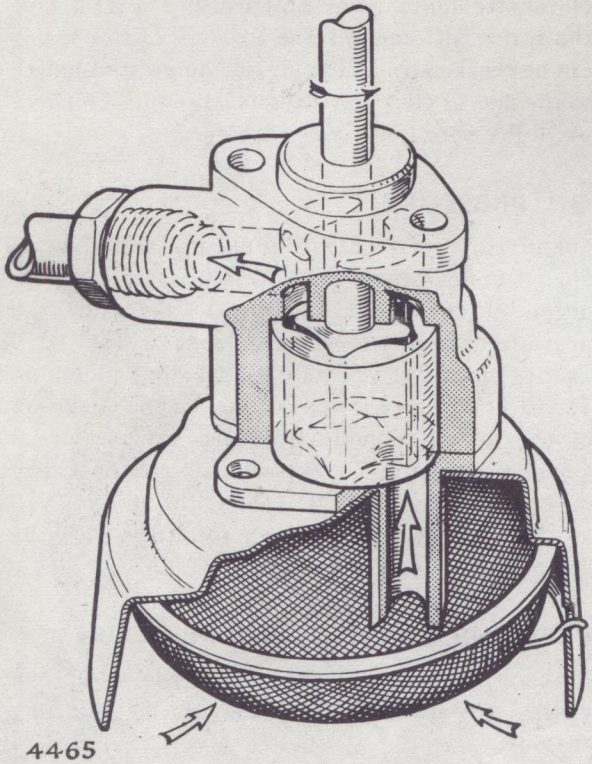

Fig. 9. *Oil pump—cut-away view*

Low oil level in sump.

Oil leaks caused by faulty unions and joints, or by cracked or broken internal pipe from the pump to the filter.

Faulty oil pressure gauge.

Oil pressure relief valve not working properly, due to particles of foreign matter lodged between valve and seating.

Choked oil pump intake filter.

Dilution of oil in sump (see under following heading).

Worn main and big-end bearings.

Worn oil pump rotors and pump body.

CRANKCASE OIL DILUTION

Dilution of the lubricating oil may be brought about by the addition of poor quality oil, or by fuel leaking past pistons and rings. The latter condition may be due to worn bores, pistons and rings, and is most likely to occur in cold weather.

Symptoms of crankcase dilution are low oil pressure, rapid wear, overheating, loss of power and emulsification of oil. Emulsification of oil can also be caused by the presence of water due to condensation, leaking cylinder head gasket or cracked cylinder block.

If inspection confirms that dilution has taken place ascertain and correct the cause of it. Drain the sump, oil filter and camshaft chamber. The latter is drained by removing the two centre bottom fixing bolts securing the chamber covers. Refill with new oil of the correct grade. After running the engine for a short time top up the sump oil level as this will fall because of the oil taken to refill the oil filter and camshaft chamber.

OIL SUMP (OIL PAN)

To remove and refit

Drain oil from sump by removing the drain plug on the right-hand side (near side).

Remove centre track rod — IMPORTANT see CENTRE TRACK ROD, to remove and replace, in Section J. It is not necessary to remove the outer track rods from the centre track rod.

Remove oil sump by undoing its holding setscrews, and draw sump backwards to clear the front cross member.

The sump should be thoroughly washed with paraffin and allowed to drain dry.

Check that the sump-to-engine joint is intact and renew if necessary. If a new joint is fitted it should be stuck in position on the top face of the sump with jointing compound. Do not apply jointing to the bottom face of the cylinder block or to the top face of the joint.

In all cases where the sump is removed, the opportunity should be taken to clean the oil pump gauze (see "OIL PUMP INTAKE FILTER—TO CLEAN").

Refitting the sump is a reversal of the removal instructions.

Refill sump to level with specified oil (see Section P).

If the refilling of the sump happens to coincide with the fitting of a new by-pass oil filter element, due allowance for the capacity of the filter unit should be made as a noticeable fall in oil level will take place immediately the engine has been run, due to the refilling of the filter unit.

OIL PUMP

A cut-away illustration of this pump is given in Fig. 9. A four-lobe rotor mounted on the main spindle drives a ring into which are machined five internal lobes. The outer diameter of the ring rotates in the circular bore of the oil pump body, which is offset from the main spindle. The action of the four-lobe cam on the five-lobe ring creates a strong pumping action by progressively increasing and reducing the clearance between each set of lobes. The pump is driven by skew gears from the camshaft, and as the ignition distributor drive is not taken from the pump spindle, pump removal and replacement does not involve timing the ignition. During an engine overhaul, or if the oil pump is the suspected cause of low oil pressure, the pump clearances should be checked as described in the following paragraphs.

Oil Pump Intake Filter—To clean

This gauze filter should be removed and cleaned whenever the sump is removed. The filter is held in place by a spring wire retainer, which when removed, allows the gauze to be removed and cleaned. After cleaning, the gauze should be blown dry with compressed air, or allowed to drain dry.

To remove pump

Remove sump.

Remove two bolts at flanged end of oil pipe connecting pump to the cylinder block.

Remove two bolts securing oil pump body flange to the cylinder block, and withdraw the pump complete with oil delivery pipe. If it is intended to fit another pump, the oil delivery pipe union nut on the pump body should be slackened before undoing the pump body fixing bolts.

To dismantle, check clearances and overhaul

Remove the pump intake gauze filter. Invert the pump and remove the four hexagon-headed screws securing the base plate to the pump body.

Lift out the outer rotor ring taking care not to drop it. IF THIS ITEM IS DROPPED IT CAN EASILY CRACK.

Remove all traces of oil from the inside of the pump body and both rotors. Replace rotors.

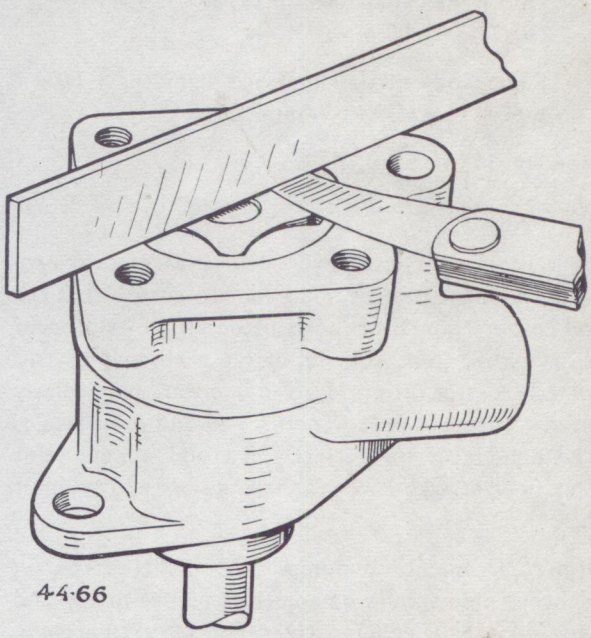

Fig. 10. *Checking end float of oil pump rotors*

The following clearances should be checked:—

1. End clearance between the inner and outer rotor ring, and pump body. This must not exceed ·003" (·076 mm.) when measured with a feeler and straight edge as illustrated in Fig. 10.

   Provided there is no abnormal wear a small amount of excess end clearance can be removed

by lapping the bottom face of the pump body, and if necessary, the outer rotor end.

2. Side clearance between the top of the lobes on the inner and outer rotor as shown in Fig. 11. The maximum permissible clearance at the point "A" is ·010" (·25 mm.) and new parts should be fitted if this figure is exceeded.

3. Clearance "B" between the outside of the outer rotor and the pump body must not be greater than ·008" (·20 mm.). Should a larger clearance be found the external diameter of the rotor ring and the bore diameter of the pump body should be checked and any parts outside the following dimensions should be replaced, or a reconditioned pump fitted.

   Outer rotor diameter 1·5975"—1·5965" (40·57—40·55 mm.).

   Pump body rotor ring bore diameter 1·603"—1·604" (40·71—40·74 mm.).

See Fig. 11. on page 16.

To refit

This is, of course, a reversal of the removal procedure, but it is most important to ensure that the oil delivery pipe is properly fitted. If oil leaks occur from either joint connection at each end of this pipe, a loss of oil pressure may occur, particularly at low engine speeds. The flanged end joint face of the pipe must be perfectly flat and a new joint should be fitted between the flange face and cylinder block.

If a replacement oil pump is being fitted the oil delivery pipe should be annealed before fitting and the union at the pump tightened after tightening the flanged end fixing bolts.

ADJUSTMENTS

Sparking Plugs

Satisfactory performance of the engine can only be obtained by the use of the correct type of sparking plug and when it becomes necessary to renew them the recommended make and type must be used.

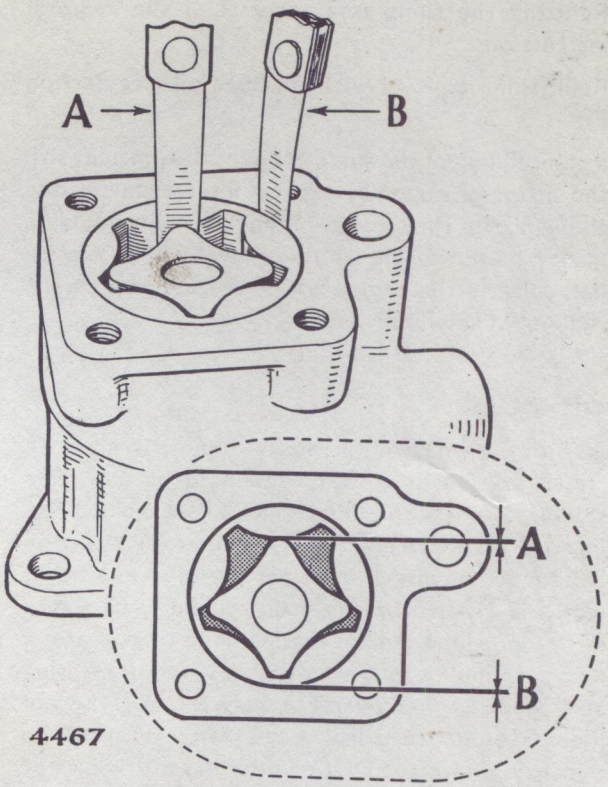

Fig. 11. *Checking oil pump rotor lobe tip clearance and clearance of outer rotor in pump body*

There is little to be gained by experimenting with different plugs, as the make and type fitted to the engine, when new, is best suited for all normal requirements.

Plugs should be cleaned on an "Air Blast" cleaner. After cleaning the plugs should be tested under pressure. The Champion Spark Plug Comparator provides a convenient means of testing spark plugs under pressure and enables the actual plug performance to be compared to a new plug.

To obtain maximum performance from the engine, plugs should be changed as complete sets when the comparator test gives poor readings or when the electrodes show obvious signs of burning away.

Sparking Plugs—To remove

When it is necessary to remove the sparking plugs for cleaning and adjustment the following procedure should be followed using the special box spanner provided in the tool kit which is illustrated in Fig. 13.

The box spanner has a built-in spring circlip which allows the spanner to grip the sparking plug, so that it can be lifted out or replaced, as required.

1. Disconnect air intake hose at carburettor and air cleaner where the oil bath type air cleaner is fitted. Remove the sparking plug lead cover which is a spring fit in between the sides of the rocker cover in which it fits.
2. **Disconnect plug leads by pulling the casing through which the lead passes to the plug.**

   Do not pull on the lead itself. The lead is held in the casing so that it is pulled off or replaced on the plug terminal ONLY WHEN THE LEAD CASING IS MOVED (see Fig. 12).
3. *Inspect sparking plug wells to ensure that there is nothing to fall into the engine when the plugs are removed. This precaution should not be omitted and is very quickly carried out by means of a lead lamp or hand torch and mirror.*
4. Remove sparking plugs using special box spanner and ensure that the plug washer is lifted out with each plug. The correct plug washer will not normally fall off the spark plug.

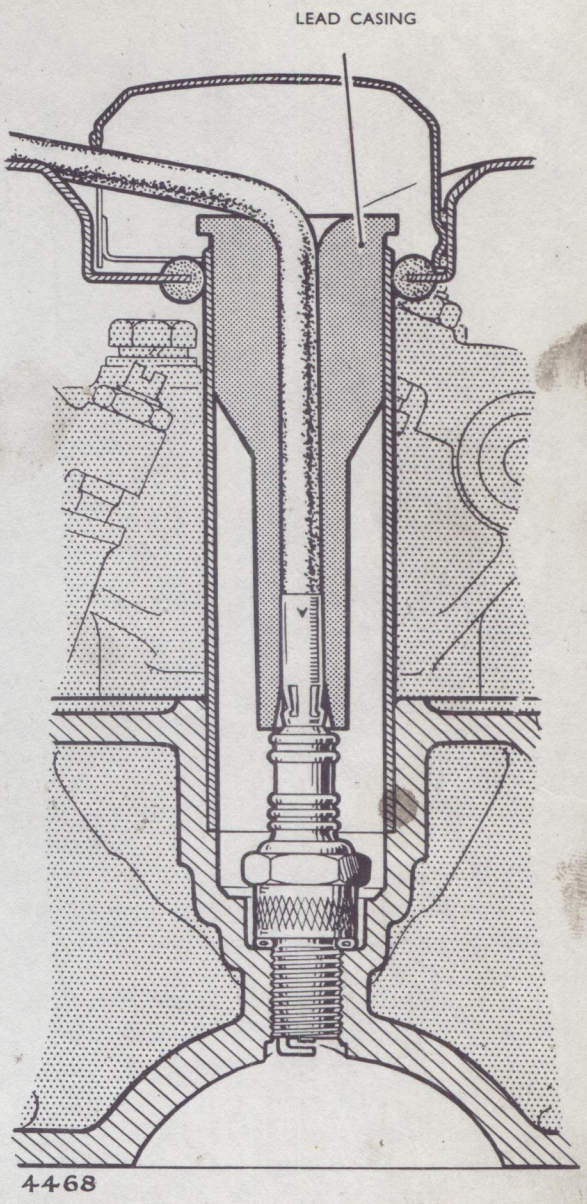

Fig. 12. *Spark plug HT lead connection*

Sparking Plugs—Examination and cleaning

Figs. 14 to 18 illustrate the various conditions in which spark plugs are found on removal and these are as follows:—

NORMAL CONDITION—look for powdery deposits ranging from brown to greyish tan. Electrodes may be slightly worn. These are signs of a spark plug used under normal conditions of mixed periods of high speed and low speed driving. Cleaning and regapping the spark plugs are all that is required (see Fig. 14).

White to yellowish powdery deposits usually indicate long periods of constant speed service or a lot of slow speed driving. Fig. 15 illustrates

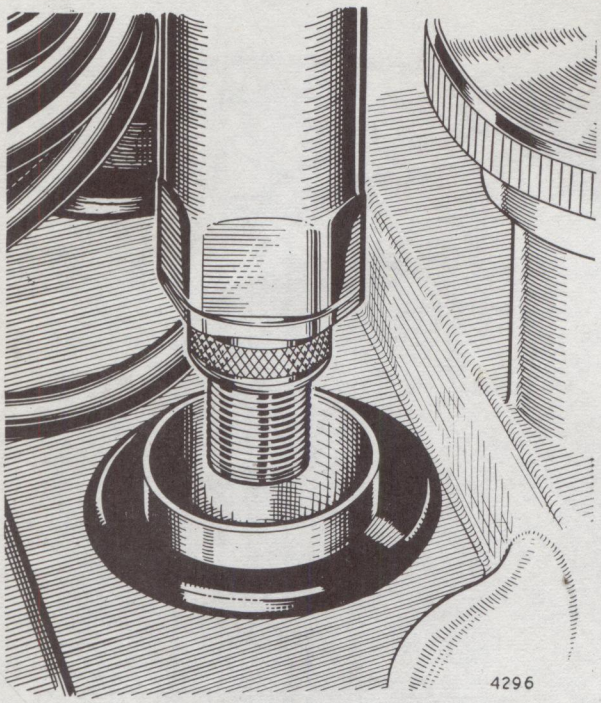

Fig. 13. *Removing sparking plug with special box spanner*

this condition. These deposits have no effect on performance if the spark plugs are cleaned *thoroughly* at regular intervals.

OIL FOULING is usually identified by wet sludge deposits traceable to excessive oil entering the combustion chamber through worn rings and pistons, excessive clearances between intake valve guides and stems or worn and loose bearings, etc. See Fig. 16. Hotter spark plugs may alleviate oil fouling temporarily, but in severe cases engine overhaul is called for.

PETROL FOULING is usually identified by dry black fluffy deposits which result from incomplete combustion (see Fig. 17). Too rich an air-fuel mixture, excessive use of hand choke or faulty choke action can cause incomplete burning. In addition, a defective contact breaker points or H.T. cables can reduce voltage supplied to the spark plug and cause misfiring. If fouling is evident in only a few cylinders, sticking valves may be the cause.

Excessive idling, slow speeds or stop-and-go driving can also keep plug temperatures so low that normal combustion deposits are not burned off.

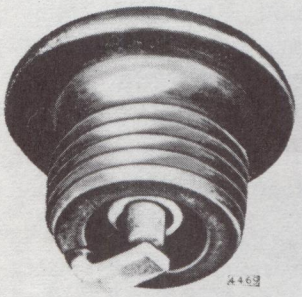

Fig. 14

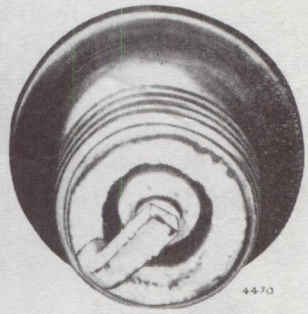

Fig. 15

Fig. 16

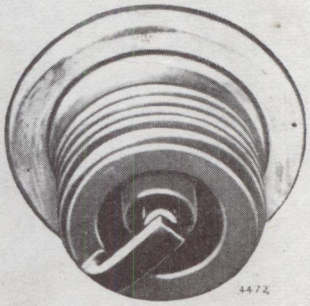

Fig. 17

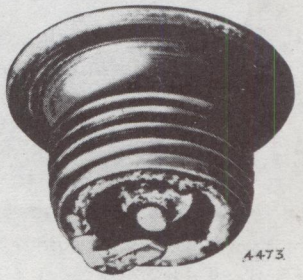

Fig. 18

BURNED OR OVERHEATED spark plugs are usually identified by a white burned or blistered insulator nose and badly eroded electrodes (see Fig. 18). Inefficient engine cooling and improper ignition timing can cause general overheating. If only a few spark plugs are overheated, the cause may be uneven distribution of the coolant. Severe service, such as sustained high speed and heavy loads, can also produce abnormally high temperatures in the combustion chamber, which necessitates use of colder spark plugs.

Sparking Plugs—To clean and adjust

Plugs should be cleaned with an air blast cleaner and before setting the plug gaps the electrode tips should be filed lightly to remove all traces of burning.

The gap setting of sparking plugs is very important and points should be correctly set by bending the earthing (side) electrode. Never bend the centre electrode as this will crack the insulator tip. A suitable combined setting tool is illustrated in Fig. 19.

The plug threads should be wire brushed and the copper washers renewed if worn or badly flattened. Grease or oil should not be used on these threads as they can act as an insulator, and cause the H.T. current to jump to earth on the outside of the plug.

Sparking Plugs—To refit

1. Before replacing sparking plugs ensure that no plug washers have been left in the plug recess as it is important that only one washer is used under each plug.
2. Insert the plug in the special box spanner and screw in plug and tighten in normal manner.
3. Replace plug leads in their correct positions by pressing down on lead casing. Plug lead lengths are such that incorrect replacement is almost impossible.
4. Replace spark plug lead cover making sure it has properly sprung into position.

Sparking Plugs—H.T. Leads

Possible radio interference from the H.T. leads is prevented by the special internal construction of the leads which have no internal wires. When it becomes necessary to renew these items the correct replacements should be obtained. In an emergency a good quality H.T. wire can be used but it should be replaced as soon as possible by the correct H.T. leads.

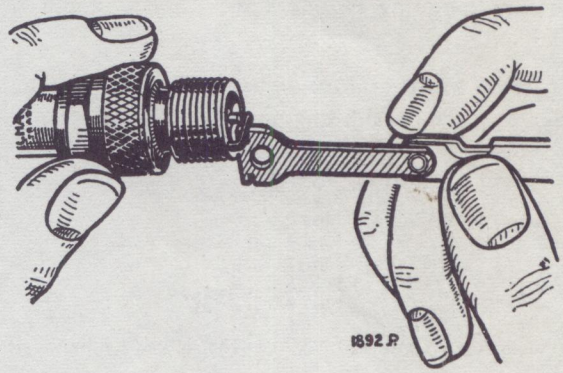

Fig. 19. *Setting plug gap*

Fig. 12 shows how these leads are fitted in the lead casing.

Valve Rockers—Adjusting clearances

See Fig. 20

Adjustments should be made when the engine is HOT.

Remove the spark plug cover and disconnect plug leads from spark plugs by pulling on the ignition cable lead casing (see Fig. 12).

Remove valve rocker cover by undoing its four slotted fixing bolts.

It is most important that clearances are checked and adjusted when the tappets are resting on the back of the cam, that is, on the cam base circle, well clear of the cam ramp.

The simplest way of doing this is to rotate the engine until the rocker to be adjusted has opened the valve to its maximum amount, and then turn the engine one complete turn. This will turn the camshaft half a turn and bring the tappet on to the back of the cam. It will be noticed that when the tappet is in the correct position for adjustment the valve on the corresponding cylinder is at full lift. The corresponding cylinders are 1 and 6, 2 and 5, and 3 and 4.

The valves are therefore adjusted in the following order by turning the engine 120° (one third of a turn) between each adjustment:—

No. 1	inlet	rocker	with	No. 6	inlet	valve	open
No. 5	,,	,,	,,	No. 2	,,	,,	,,
No. 3	,,	,,	,,	No. 4	,,	,,	,,
No. 6	,,	,,	,,	No. 1	,,	,,	,,
No. 2	,,	,,	,,	No. 5	,,	,,	,,
No. 4	,,	,,	,,	No. 3	,,	,,	,,

No. 1	exhaust	rocker	with	No. 6	exhaust	valve	fully	open
No. 5	,,	,,	,,	No. 2	,,	,,	,,	,,
No. 3	,,	,,	,,	No. 4	,,	,,	,,	,,
No. 6	,,	,,	,,	No. 1	,,	,,	,,	,,
No. 2	,,	,,	,,	No. 5	,,	,,	,,	,,
No. 4	,,	,,	,,	No. 3	,,	,,	,,	,,

The correct valve clearances are given in the Data Section.

To adjust clearance release the locknut under the adjusting screw head and rotate screw by means of a screwdriver until a feeler of the correct thickness is lightly gripped between the rocker and the valve stem. Tighten locknut before passing to the next valve and recheck clearance. Continue this procedure until all valves have been checked.

Those who are carrying out this operation for the first time may find it helpful to chalk mark each rocker when the adjustment has been made.

Replace rocker cover, spark plug leads, and lead cover.

Ignition Timing—Vernier adjustment

See Fig. 21

Small adjustments of the ignition timing are sometimes necessary before the best performance can be obtained from a particular fuel. For this reason

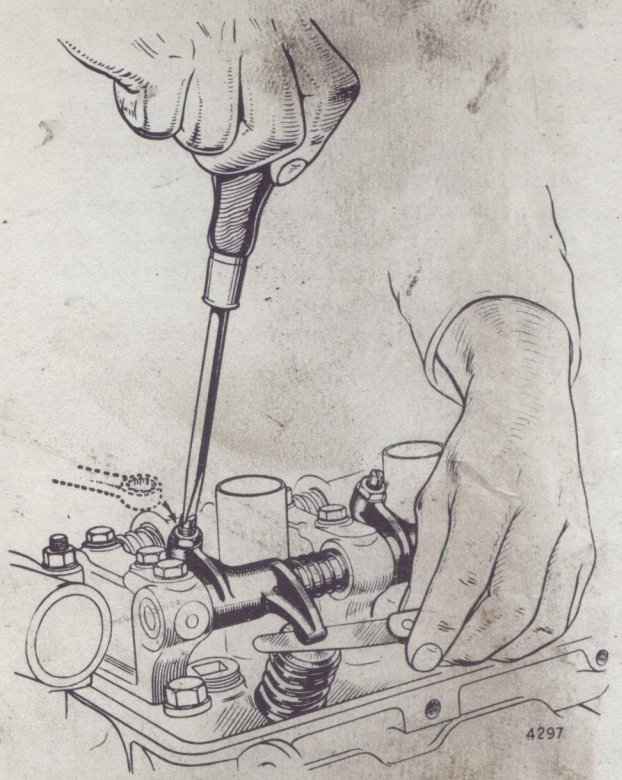

Fig. 20. *Adjusting rocker clearances*

a vernier adjustment is incorporated in the distributor. This consists of a knurled wheel which is turned to advance or retard the distributor, and arrow signs A and R cast on the distributor body indicate which way to turn this control to advance or retard. A graduated scale adjoining the knurled control is provided so that fine adjustments can be made.

An alteration of one vernier scale division is equal to 4° of crankshaft rotation and one turn of the knurled adjustment to 3° of similar rotation.

Only half a vernier division alteration will sometimes noticeably alter the running of the engine. If the engine seems "harsh" or rough, it should be retarded, and if "sluggish" it may need advancing, but only small alterations from the correct static timing are permissible, and then only when it is certain that the rest of the ignition system is working correctly.

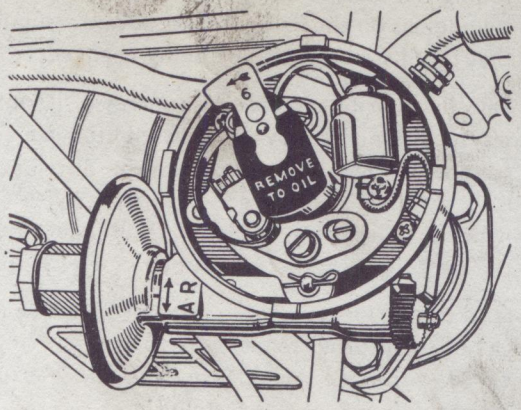

NOTE: Series III distributor has been moved round 180° as shown in the upper left illustration. Rotor positions for No. 1 TDC firing are shown in each illustration.

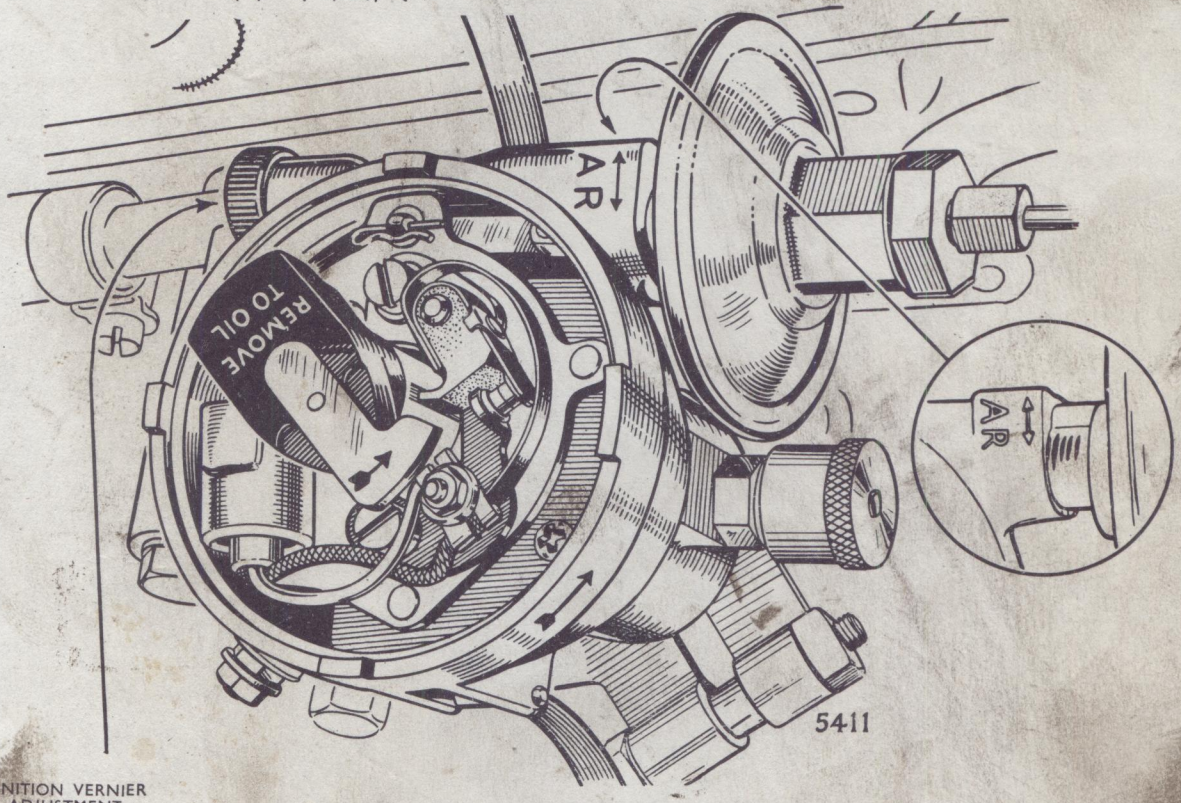

IGNITION VERNIER ADJUSTMENT

Fig. 21. *Ignition vernier control*

Ignition Timing—To check

The firing of the engine is 1–5–3–6–2–4. Before checking or retiming the ignition it is necessary to ensure that the distributor contact breaker gap is correctly set. This and all other matters in connection with the distributor are dealt with in Section N (Electrical Equipment).

The correct timing is given in the General Data Section at the commencement of this Manual. This figure is known as the Static Ignition Setting and is made by timing the ignition to fire at T.D.C. and advancing or retarding to the required setting by means of the vernier control.

The following procedure should be carried out when it is necessary to check the ignition timing:—

1. Turn the engine until the line on the crankshaft damper rim comes exactly opposite to the pointer fixed to the timing case (see Fig. 22).

   This gives a crankshaft position of Nos. 1 and 6 T.D.C. and for purposes of checking the ignition timing it does not matter which of these cylinders is on the firing stroke, always assuming that the distributor is not being changed.

2. Set the distributor vernier control in its midway position. Remove the distributor cap and connect a 12 v. bulb between the distributor L.T. terminal and a good earth. With the ignition switched on the bulb will light when the contact breaker points open.

3. Slacken the distributor clamp screw and turn the distributor anti-clockwise through an angle of 30°. If necessary disconnect the vacuum advance pipe to avoid straining it.

4. Switch on the ignition and, applying light finger pressure on the rotor in a clockwise direction, return the distributor body clockwise until the bulb just lights.

   Tighten the distributor clamp screw.

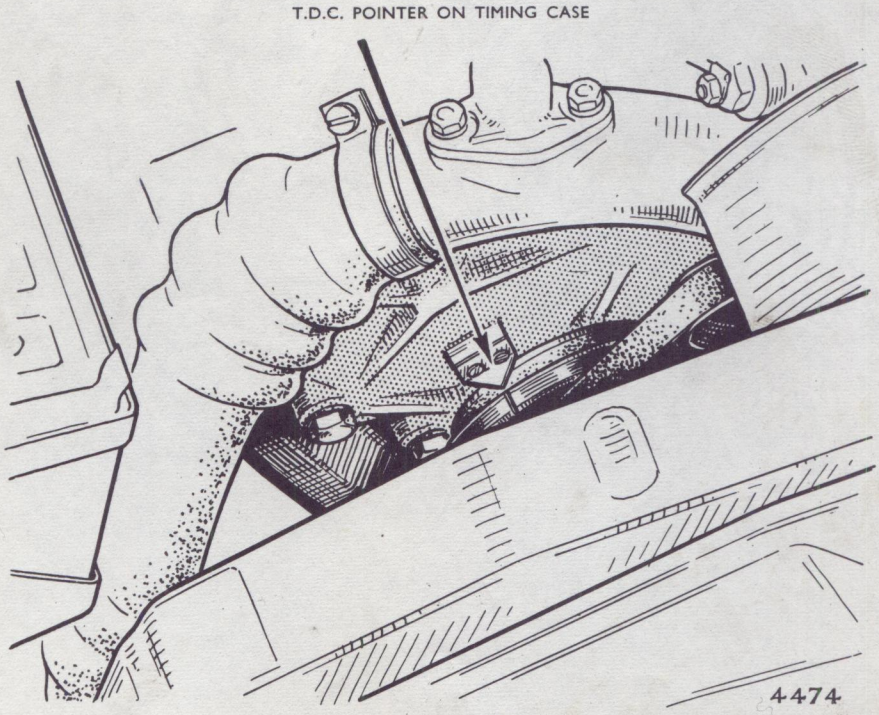

Fig. 22. *No. 1 and 6 T.D.C. marking on crankshaft damper rim and pointer on timing case*

5. Recheck the ignition timing by turning the engine a complete turn. The bulb should just light as the timing mark on the crankshaft damper rim comes opposite to the pointer on the timing case. If the timing is now correct, switch off ignition, remove bulb and replace distributor cap.

6. The ignition timing is now set to T.D.C. and the vernier adjustment must be used to advance the ignition to the setting given in the Data Section, under Ignition System. One vernier division is equal to 4°, and one turn of the knurled adjustment is equal to 3° of crankshaft movement.

Checking Ignition Timing using Stroboscopic Timing Light

The use of a high intensity timing light is recommended for setting the ignition timing and for the rapid visual checking of the action of the centrifugal and vacuum advance mechanisms.

The advantages of an electronic timing light are:—

1. It is simple to use and it is portable.
2. It is the quickest method of setting and checking ignition timing.
3. It enables ignition timing and action of the automatic advance mechanism to be checked under normal operating conditions without removing the distributor, or any other items from the engine.
4. It is possible to set or check ignition timing disregarding any backlash which may exist in the driving gears or slackness of camshaft driving chain.

Timing lights are available from V. L. Churchill & Co. Ltd., Great South West Road, Bedfont, Feltham, Middlesex. List No. 601.

1. *PREPARING TO USE THE TIMING LIGHT*

The pointers on the timing case and the mark on the crankshaft damper rim should be cleaned and are easier to see if marked with white chalk.

Adjust the distributor vernier so that half the scale is visible.

Connect the electrical leads from the timing lamp to the maker's instructions, and run the engine at an idling speed of 400 to 500 r.p.m., which is below the speed at which the centrifugal or vacuum advance action begins.

2. *HOW THE TIMING LIGHT OPERATES*

Correctly connected and with the engine running, the timing light gives a high intensity flash every time the contact breaker points open. When this light is directed on to the crankshaft pulley, the pulley will appear to be stationary while the engine is running. The apparent distance between the mark on the pulley and the pointer on the timing case indicates the amount of ignition advance.

3. *SETTING IGNITION TIMING*

The engine should idle at 400 to 500 r.p.m. and the relative positions of the crank pulley pointer and timing case pointer observed in the light given by the timing lamp.

The distributor should be adjusted, after loosening the clamping plate so that pointers appear to come opposite to each other, while the engine is idling. This gives an ignition timing of T.D.C. and the timing setting before T.D.C. is obtained by the use of the vernier adjustment as previously described under IGNITION TIMING.

4. *CHECKING THE CENTRIFUGAL ADVANCE ACTION*

Disconnect the vacuum pipe from the diaphragm unit and, observing the "stationary" line on the crankshaft damper rim, gradually increase the engine speed. The distance between the pointers will increase, showing that the centrifugal advance mechanism has begun to operate over its speed range. Jerky movement of the pulley timing marks, whilst accelerating or decelerating, indicates sticky centrifugal advance mechanism, probably caused by lack of lubrication.

5. *CHECKING VACUUM ADVANCE ACTION*

The throttle should be opened to give an engine speed of 1,200 to 1,500 r.p.m. or until the vacuum connection drilling in the carburettor has been uncovered by the butterfly valve. With the engine running under these conditions the vacuum connection on the distributor diaphragm housing should be alternately disconnected and reconnected whilst observing the pointer on the crank pulley. This should advance as the end of the vacuum pipe is refitted, and retard as the pipe is removed.

Ignition Timing—Road Performance Test

To obtain the best possible engine performance the ignition setting can be adjusted on the road provided that the static ignition timing is known to be correct and the distributor automatic advance mechanism functioning correctly.

The road test is made by taking stop watch readings of time taken to accelerate in top gear from 20 to 50 m.p.h. (32 to 80 k.p.h.) under full throttle conditions on a straight level road. Small adjustments are then made with the vernier control on the distributor until the lowest stop watch reading is obtained. Several test runs have to be made ON THE SAME ROAD.

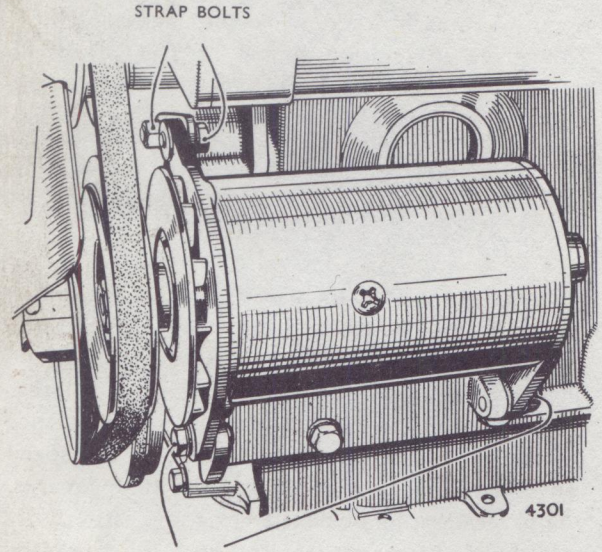

Fig. 23. *Generator driving belt adjustment*

This test requires considerable skill and should only be undertaken by those who have the necessary road testing experience.

It is emphasised that the distributor centrifugal and vacuum advance mechanism must be working correctly and if these are in any way suspect, the distributor should be removed and checked on a reliable test rig or distributor analyser. Alternatively, the automatic advance action can be quickly checked with a Timing Light as described on page 22, or with Crypton "Motormaster" equipment that allows the ignition advance angle to be read off against various engine speeds with the distributor in position.

Generator—To adjust Belt Tension

See Fig. 23

The generator is driven from the crankshaft by a vee belt which also drives the water pump and fan.

The belt is correctly tensioned when a total of $\frac{5}{8}$" (16 mm.) movement can be obtained on the longest run of the belt.

To adjust the tension, slacken the fixing bolts at the bottom front and rear of the generator, the strap pivot bolt, and the screw through the slot in the strap. Move the generator about its two bottom fixing bolts until the correct belt tension is obtained, then retighten all bolts, run engine and recheck belt tension.

EXHAUST MANIFOLD

To remove and refit

This is a very simple operation requiring the removal of the two exhaust flange nuts, the dipstick tube support and seven manifold fixing nuts and washers. The use of penetrating oil on the threads, before removal of the nuts, is recommended.

When replacing, new gaskets should always be fitted and threads should be lubricated with

graphite grease. All nuts should be retightened after the engine has been run for about an hour.

INLET MANIFOLD

To remove and refit

1. Disconnect rocker cover vent hose and air intake elbow, or the complete air cleaner from the carburettor.
2. Disconnect carburettor controls and fuel feed pipe from the carburettor and fuel pump.
3. Drain radiator, taking care to save anti-freeze mixture if in use, and disconnect hot spot water pipe by removing its two fixing bolts from the flange connection on the water pump intake pipe.
4. Remove distributor cover, low tension lead, vacuum advance pipe and two screws from the bracket flange on the cylinder block. Lift out distributor, noting that its offset driving dog ensures that it cannot be incorrectly replaced.
5. Disconnect vacuum feed to brake system at joint connection at rear end of inlet manifold.
6. Remove 10 securing nuts and washers and lift off manifold complete with carburettor.

When replacing, new joints should be used throughout. The heater water control valve must be fully open when refilling the cooling system. After starting the engine the heater outlet pipe should be slackened off on the water control valve, to allow air to be displaced as the heater system fills. Immediately water appears at the slackened connection it should be tightened. Finally, the radiator should be topped up to replace the water that has filled the heater system.

COMPRESSION PRESSURES

An engine in good condition should give the compression pressures given in the General Data section. These pressures are taken with the engine hot at starter cranking speed, with all sparking plugs removed and the throttle held fully open.

It is important to ensure that the valve rocker clearances are correct before making this test.

If the readings are well below the quoted figures, the valves or piston rings require attention, or possibly the engine needs reboring if it has covered a very large mileage. A faulty cylinder head gasket can also cause low or differing compression readings, and this possibility should not be overlooked.

Incorrect valve timing will also give incorrect compression pressures. If the valve timing is early the compression pressures will be higher, and if late, lower than specified. Such compression readings will only be obtained after incorrect assembly of the timing wheels and chain.

The Churchill Cylinder Compression Tester, Ref. No. 430-1 is recommended for taking compression tests on this engine.

TOP OVERHAUL—CYLINDER HEAD and VALVE GEAR

This work is not normally needed until a considerable mileage has been covered. It involves removal of the cylinder head, decarbonising, valve refacing and grinding in. The carburettor should be thoroughly serviced as described in Section "C" of this Manual, and the fuel pump filter cleaned.

If facilities are available the Distributor should be checked on a test rig (Distributor Analyser) for correctness of phasing, centrifugal advance and vacuum advance action. After a large mileage the distributor performance often falls below the original specification, resulting in loss of engine "liveliness". If the distributor performance is different from that given in the Data Section of this manual, under IGNITION, it should be replaced by a reconditioned unit. Full details of the distributor are given in Section N.

The following paragraphs describe the necessary operations in the sequence in which they occur:—

Rocker Shaft Removal

Remove spark plug leads.

Remove rocker cover.

Remove rocker shaft assembly by evenly undoing its 14 rocker standard fixing bolts.

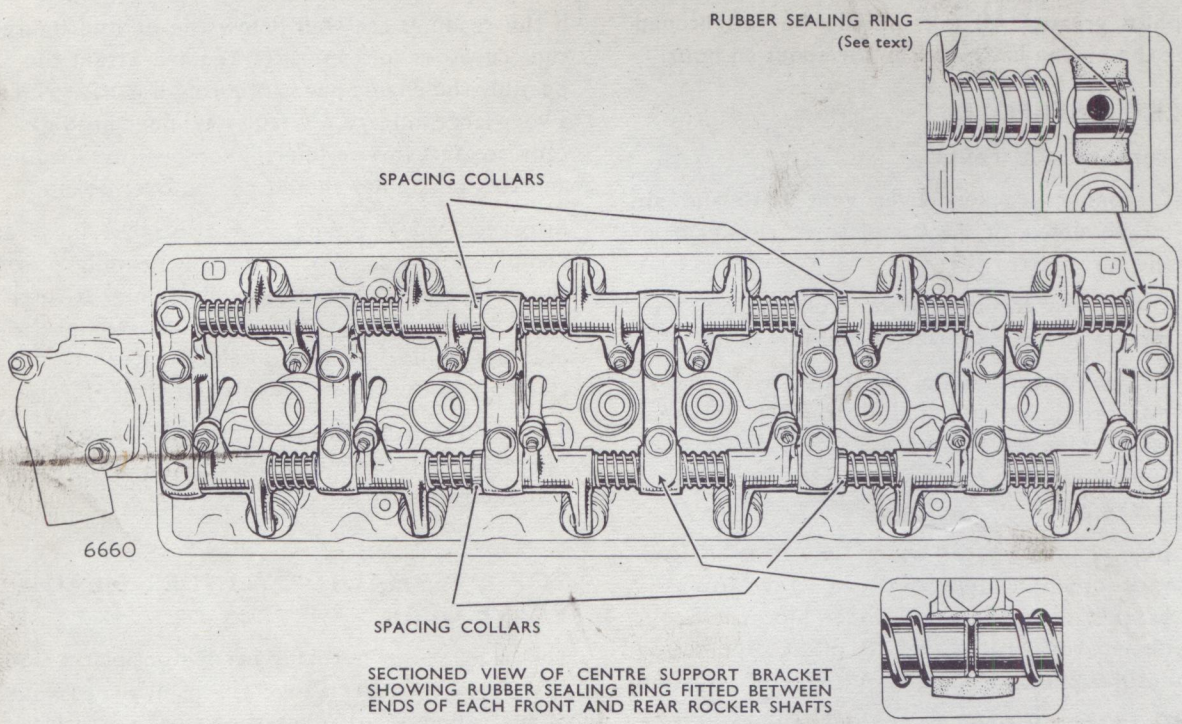

Fig. 24. *Plan view and details of valve rocker assembly*

The rocker shaft assembly should be lifted off by holding the front and rear standards, at the same time pressing inwards to prevent the assembly from separating at the centre rocker standard.

Rocker Shaft Details

Fig. 24 illustrates the complete rocker shaft assembly.

Two inlet and two exhaust rocker shafts are used which are supported in seven rocker standards, with the ends of the four shafts meeting in the centre standard. Owing to the different positions of the valve rocker oil feed grooves, these shafts are not interchangeable.

The rocker shafts are drilled throughout their length and plugged with pressed steel sealing plugs at the outer ends. A groove of $\frac{1}{16}$" radius (1·58 mm.) is machined at the plugged end of each shaft and retains a neoprene sealing ring which prevents oil leakage at the outside ends of the rocker shaft locating bores of the front and rear standards.

Similar sealing rings are fitted between the ends of the rocker shafts in the centre support standard.

Rocker shafts are secured in the front and rear standards by set screws and to ensure correct replacement of the rocker shafts different size set screw holes are drilled at the plugged ends.

Exhaust valve rocker shafts are drilled ·316" diameter (8·02 mm.).

Inlet valve rocker shafts are drilled ·257" diameter (6·52 mm.).

A further and easy means of recognising the respective shafts is the length from the unplugged end to the first groove around the shaft. These dimensions are:—

Exhaust valve rocker shaft 2" (50·8 mm.).

Inlet valve rocker shaft ·975" (24·8 mm.).

The parts of the rocker shaft on which the rockers operate are induction hardened. There are two

annular grooves at each rocker position, to carry oil into the rocker bore. These feed the two holes in the rocker that carry oil to the rocker tips and push rod cups.

Rocker Standard Details

The front and rear rocker standards are interchangeable and have internal drillings to supply oil to the rocker shafts.

The five intermediate standards are interchangeable with each other but not with the front and rear standards.

Rocker Assembly Details

A plan view of the complete rocker assembly together with the item details is shown in Fig. 24.

When assembling these parts, it is important to ensure that a rubber sealing ring is fitted to each rocker shaft at its sealed outward end. The rubber sealing ring must be fitted by first pushing the shaft through the standard, then fitting the rubber ring on the protruding shaft end, and pulling the shaft and rubber ring backwards into the standard.

Any attempt to push the shaft, with the rubber ring fitted, through the standard, will result in the rubber ring being damaged as it passes the shaft locating hole.

The two sealing rings, used between the ends of the rocker shafts in the centre support standard, must also be replaced before assembling the shafts into this standard.

Push Rod Removal

The push rods can be lifted out after removing the rocker assembly. They should be kept in a suitable rack so that they can be replaced in their respective positions.

If required, any push rod may be removed without removing the rocker assembly. This is done by slackening off the rocker adjustment sufficiently to allow the rocker to be pushed aside against its spring on the rocker shaft.

Cylinder Head Removal

Drain cooling system with the car heater temperature control in its MAX. position, to ensure draining of the heater system before its outlet hose is disconnected.

When decarbonising remove inlet and exhaust manifolds as described in earlier paragraphs.

Disconnect two water hoses and thermometer lead at element fitted in cylinder head water outlet housing.

Remove valve rocker gear and cylinder head fixing bolts.

The two dowels fitted on the offside (right-hand) of the cylinder block top face ensure correct location of the cylinder head.

Decarbonising

When removing the carbon from each piston crown, it is always advisable to leave a ring of carbon adjacent to the cylinder bore, as this helps to preserve a good seal, and to conserve oil. A convenient method of doing this is to turn the engine until the piston is slightly below the top dead centre position, and insert an old piston ring of correct size in the bore, and press down on the piston. In this way all the carbon within the old piston ring may be removed, leaving a ring of carbon around the edge.

The cylinder head bolts should be screwed a few turns into the cylinder block to prevent carbon falling into the bottoms of the threaded holes.

Rag should be inserted in the tappet holes in the cylinder block to prevent loose carbon from reaching the tappets.

Remove the carbon from the tops of the pistons, the combustion chambers in the cylinder head and also from the valve ports. With a suitable scraper clean out the inside of the exhaust manifold.

Remove all loosened carbon, preferably by use of a compressed air line.

Care must be taken when decarbonising the tops of

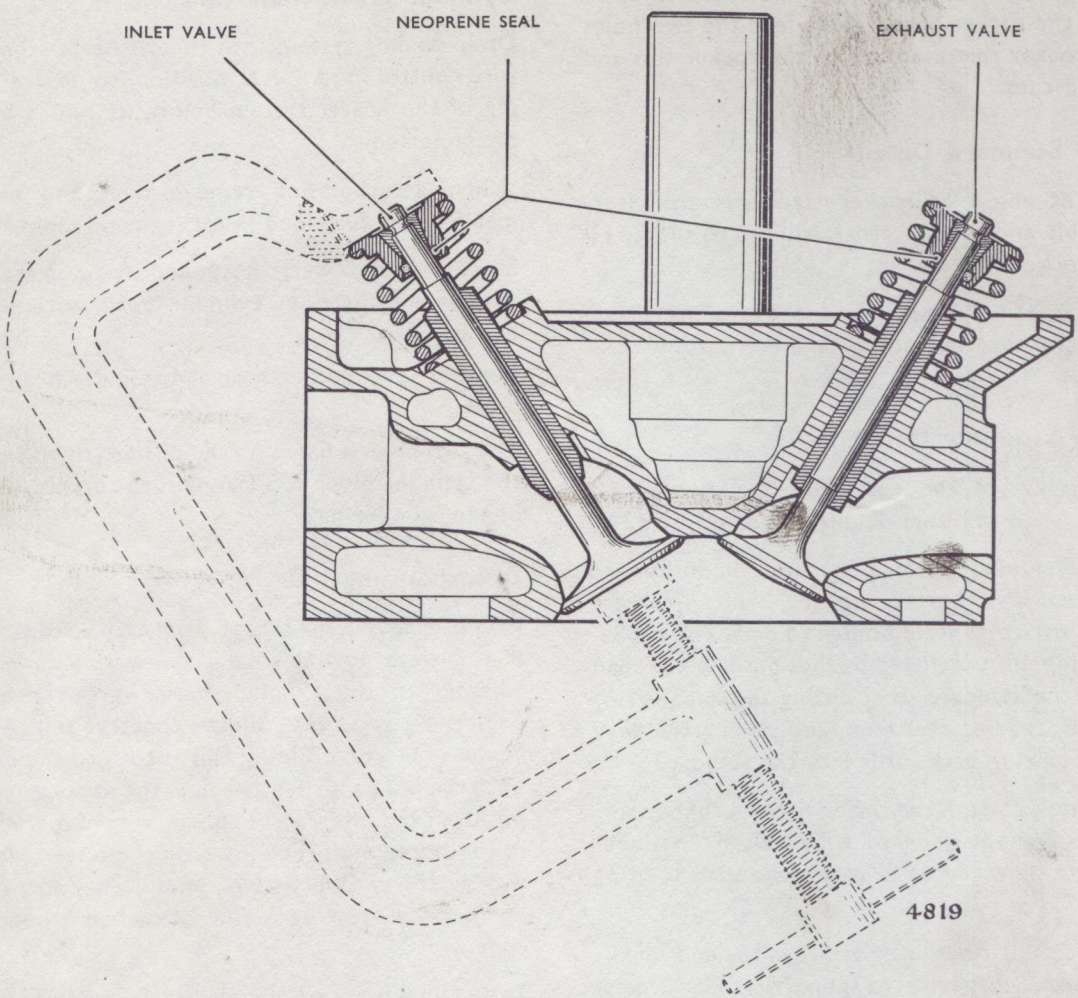

Fig. 25. *Valve spring compressor in use—Dual valve springs are fitted from Series IV onwards.*

the pistons, these being of aluminium alloy, and no pointed instruments or emery cloth may be used.

Do not on any account use abrasives for removing carbon, or damage will result.

Valves—To remove

If required the valve heads should be lightly stamped with their proper reference numbers. A simple spring compressor of the type illustrated in Fig. 25 is recommended for valve cotter and spring removal.

A Churchill Spring Compressor, Tool No. RG.6513 used with RG.6513—2 is available.

To prevent possible damage to the oil sealing ring in the valve spring cap, the cap and spring must not be compressed more than $\frac{3}{16}$" (5 mm.). If this distance is exceeded, the sealing ring will be forced over the shoulder on the valve stem. This point is illustrated in Figs. 25 and 31.

Examination of Valves, Springs and Valve Guides

Valves: Examine for pits on the face, burning,

distortion or cracks in the heads. Burnt or cracked valves must always be scrapped. See also "VALVES REFACING".

Examine the seatings in the cylinder head and if defective they should be treated as subsequently described. If the valve stems are bent or appreciably worn the valves must be scrapped, even though otherwise sound.

Wear of valve stems may be checked by means of a micrometer, and the stems should be checked from various angles and positions, as the stems of valves do not wear evenly. The correct valve stem diameters are given in the Data Section.

When valve stems are excessively worn, scored or stepped, valves should be renewed.

Guides. These may be checked for wear by using a new valve as a gauge. The valve stem should be a free sliding fit in the guide without excessive side play. Correct clearance of valve stems in guides is given in the Data Section.

In making the foregoing tests both valve stem and valve guide must be free from carbon or burrs, and free from oil.

Springs: If possible, the fitted load of the springs should be checked. These dimensions should be similar to those given in the Data Section. A maximum loss of 10% on used springs is permissible. A convenient alternative method of checking used valve springs is by comparing them with new springs. Place them end to end on a long bolt and compress them in a press (see Fig. 26). Any loss will then be apparent as the weaker spring will close up first.

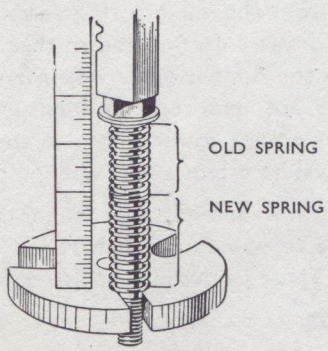

Fig. 26. *Checking valve springs*

Twin valve springs are supplied in pairs and must only be renewed in pairs.

Cotters and spring cups are best compared with new parts visually, and replaced as necessary.

VALVES—To reface

If on examination of the valves it appears unlikely that they would clean up satisfactorily with ordinary grinding in, they must be refaced. If the seatings are also in bad condition they must be recut, but generally, it will be found that these are better than the valves as regards condition, unless the engine has been a very long time in service. It is quite possible to reface the valves and grind them in on the seatings if the latter are in good order.

It is always better to replace a badly burnt or pitted valve, as extended refacing will bring it very low on its seating by reason of the consequent reduction in the effective diameter of the valve face, and "pocketing" will result (see Fig. 27). This condition is detrimental to the running of the engine and will cause overheating and loss of power.

Refacing of the valves is best performed by a valve refacing machine, but otherwise can be done in an ordinary lathe.

In using either of these methods perfect concentricity of the valve stem with the chuck or collet, is of the utmost importance, and the valve stem concentricity should be noted and corrected as necessary before attempting to grind or turn the face.

The valve face should be machined only until it is just true and clear of marks, to the standard angle of 45° for inlet and exhaust. These angles are reckoned from the top face of the valve head. Standard dimensions of valves are given in the General Data Section at the beginning of the manual. It should be noted that inlet and exhaust valves are of different size.

A valve which has been refaced as described, must be finally ground in on its seating (see "VALVES—TO GRIND IN"). The seating must be in good condition and the face not more than ·07" (1·7 mm.) in width.

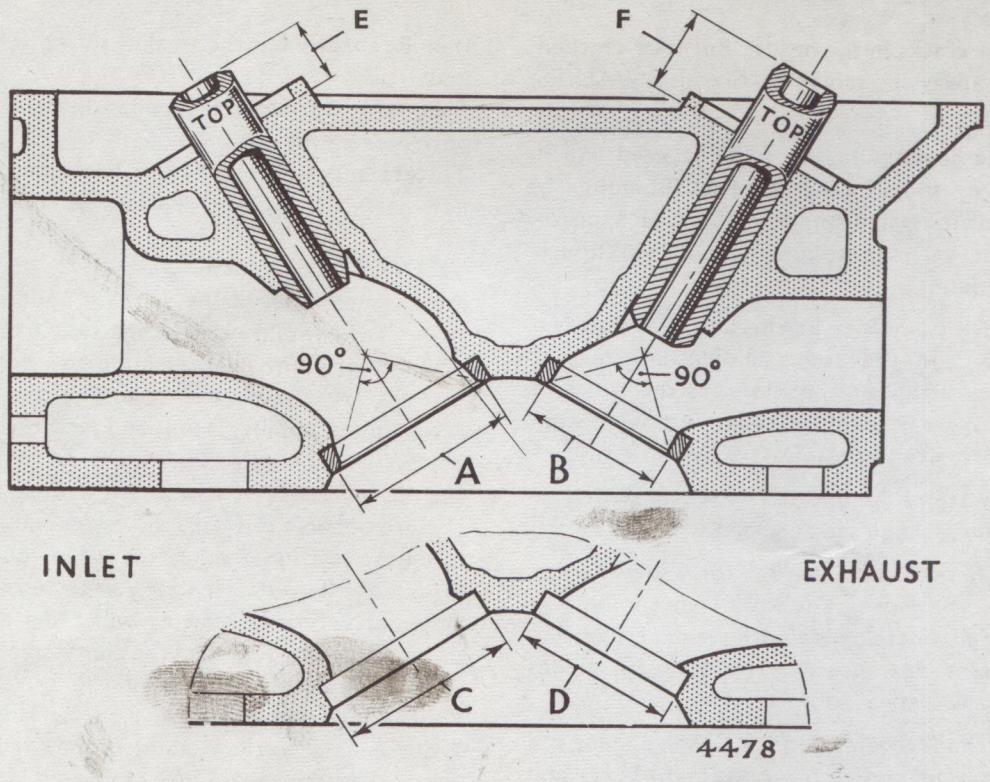

		ins.	mm.
	A. =	1·481—1·475	(37·61—37·46)
	B. =	1·281—1·275	(32·53—32·38)
Series I—III	C. =	1·625—1·624	(41·27—41·24)
Series IV onwards	C. =	1·750—1·749	(44·45—44·43)
	D. =	1·438—1·437	(36·52—36·49)

		ins.	mm.	
E. =	Inlet guide	0·61	(51·49)	
F. =	Exhaust guide	0·75	(19·05)	*Early Series I only*
	Exhaust guide length	2·6	(66·04)	
	Exhaust guide	0·65	(16·51)	
	Exhaust guide length	2·5	(63·5)	

Fig. 28. *Valve guide positions in cylinder head, and dimensions for machining cylinder head to take valve seat inserts*

Valve Guides—To renew

It is seldom necessary to renew valve guides except after long service, but it may be necessary for the purpose of recutting valve seatings where great accuracy is essential to ensure concentricity of work performed by the cutters, which are used with their pilots inserted in the valve guides.

The valve guides are a press fit in the cylinder head and may be extracted by using a puller that seats in the valve spring recess. A tool RG.10A–5 used with RG.10A for removing and replacing valve guides is obtainable from Messrs. V. L. Churchill & Co. Ltd.

When fitting new guides it is most important to ensure that the guides are a press fit into the cylinder head. Inlet valve guides are shorter than the exhaust valve guide.

Both guides are stamped TOP on the ends that protrude from the valve spring seats. The guides should be drawn into position so that the top ends project to the dimensions given in Fig. 28. These dimensions are important and ensure that valve spring cups do not foul the top of the valve guide when the valves are in a fully opened position.

Later Series II and all subsequent engines have exhaust valve guides with sharp edged chamfers each end. These guides may be fitted either way up.

On early Series I engines the longer exhaust valve guide was used. When the exhaust valve spring

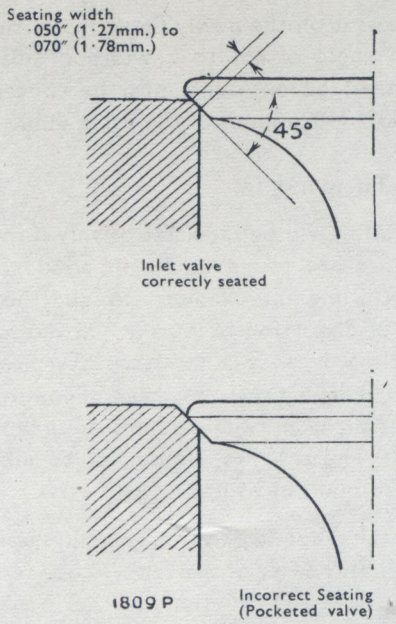

Fig. 27. *Valve seating*

cap was changed to a cap having a groove to hold a seal ring, similar to the inlet valve spring cap, the exhaust valve guide was shortened ·010" (2·54 mm.) to clear the valve cap when the exhaust valve was fully open. The shorter exhaust valve guide can be used for all replacements and MUST always be used with exhaust valve spring caps having oil seal grooves.

Valves—To recut seatings

When required, valve seatings may be reconditioned by means of a valve seating grinder or valve seating cutter. A valve seating grinder in use is shown in Fig. 29.

A suitable valve seat cutter may be obtained from Messrs. V. L. Churchill & Co. Ltd., under the following tool numbers.

316X	Valve seat cutter handle.
316–11	Pilot.
317–25	Valve seat cutter.
317G–25	Glaze breaker.

It is most important that the pilot of the valve seat cutting tool should be a close fit in the valve guides, so that the highest degree of concentricity is obtained between valve seatings and valve guide bores. This will be ensured if the valve guides are renewed (see "VALVE GUIDES—TO RENEW"). Place the valve 45° seat cutter tool in position in the valve guide and proceed to cut the face of the seating, revolving the cutter smoothly in a clockwise direction. No lubricant is required. Continue cutting until all marks have disappeared and a new face is obtained.

After cutting the new valve seating, insert the refaced valve and check that it is not brought too low in the recut seating. If the refaced valve is too low a new valve should be tried. The face of the newly cut seating should not exceed a width of ·07" (1·78 mm.).

Owing to the shape of the combustion chamber it is not possible to reduce the top width of a wide valve seating with a 15° cutter. If a satisfactory seating cannot be obtained a valve seat insert should be fitted.

When the work of recutting the seating has been completed, the valves must be ground in, as described under "VALVES—TO GRIND IN." Very little valve grinding will be required, but it must not be omitted.

All cuttings must be carefully removed before reassembling the engine.

Valve Seat Inserts

Inlet and exhaust valve seat inserts are available and should be fitted when the valve seats become too wide.

Dimensions for machining the cylinder head to take valve seat inserts are given in Fig. 28 and the dimensions of the valve seat inserts in Fig. 30.

When inserts have to be used new valve guides should be fitted and the cylinder head recessed to dimensions given in Fig. 28. These give the insert an interference fit of ·0025" (·063 mm.) to ·0045" (·114 mm.). The insert must be pressed in perfectly

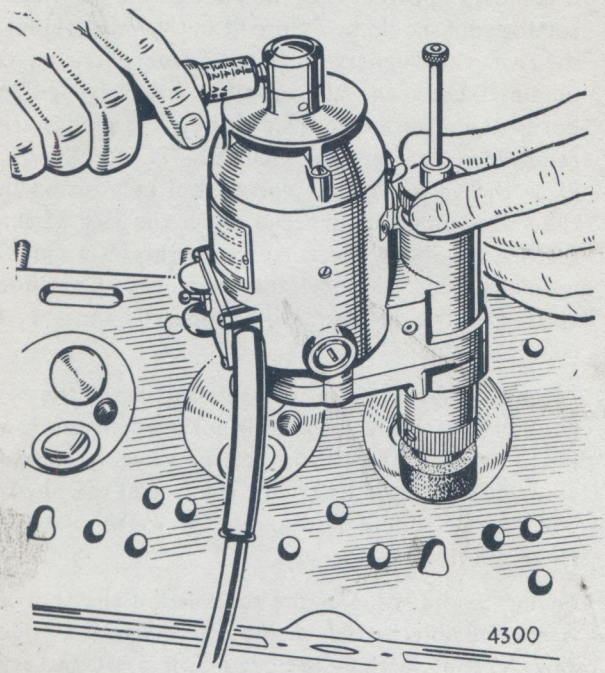

Fig. 29. *Valve seat grinder*

square until it seats on the entire bottom face of the recess. Its top face should then be level with the surrounding metal face of the combustion chamber.

The valve seat on the newly fitted insert should be cut at an angle of 45° to a width of ·05″—·06″ (1·27 mm.—1·52 mm.) and must be concentric to within ·001″ (·025 mm.) of the valve guide bore.

Valves—To grind in

This operation will be satisfactory only if the valves and seatings are found to be in good condition after dismantling and examination, and there is no evidence of distortion or burning of the faces and heads of the valves. It is necessary after new valves have been fitted, or seatings recut. The valve stems must be straight and their guides must be in good condition. The seatings should not be more than ·070″ (1·78 mm.) in width.

Place a small amount of valve grinding paste (fine) evenly round the face of the valve to be ground, not allowing it to get on the stem or other parts.

Place the valve on its seating and, by means of a suction grinding tool, rotate the valve from side to side through a few degrees only, using a light pressure. Frequently raise the valve and move round to a new position on its seating, and continue grinding. (On no account should the valve be revolved through complete revolutions when

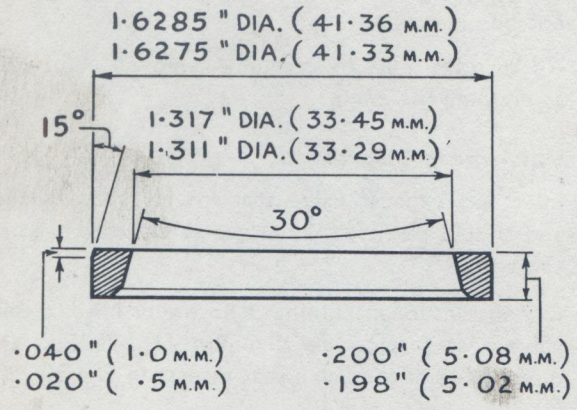

INLET—*Series I-III*
Series IV onwards
Outer dia. 1·7535″ (44·54 mm.)
,, ,, 1·7525″ (44·51 mm.)
Inner ,, 1·435″ (36·45 mm.)
,, ,, 1·429″ (36·29 mm.)

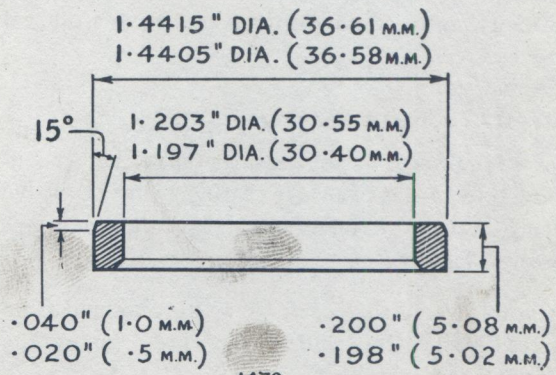

EXHAUST—*All engines*

Fig. 30. *Valve seat insert dimensions*

grinding, or rings will be formed on the faces with detrimental effect.)

The grinding should be continued in this manner until a continuous but narrow seating has been obtained both on the valve and the seating.

After thoroughly cleaning off all traces of grinding paste from the valve and seating with a dry cloth, test by placing a small amount of engineers' marking on the seating and revolving the valve in place not more than $\frac{1}{8}$" (3 mm.) in each direction. A complete circle of marking should appear on both valve face and seating, indicating a good seal.

A highly efficient air-operated valve lapping tool is available from Messrs. V. L. Churchill & Co. Ltd. (Tool No. V.L.C.143X).

Valves—To replace

Give the valve stems a thin coating of oil when replacing each valve.

Both valve spring caps have a sealing ring in the lower end which prevents an excessive amount of oil from reaching the valve guides. The seal should be a firm push fit on the end of the valve stem when in position in the spring cap. Faulty rings must be replaced or oiling up of the spark plugs may occur.

On early Series I engines, valve spring caps with oil seal rings were only fitted to the inlet valves. If blue smoke is emitted from the exhaust pipe, or if exhaust valve sticking occurs, valve spring caps with oil seal rings should be fitted to the exhaust valves as shown in Fig. 25. When this is done it is most important to ensure that the exhaust valve guides do not protrude more than ·65" (16·5 mm.) above the cylinder head. See Fig. 28. Guides protruding more than this amount can be cut back by a suitable facing tool, or if worn should be changed.

Fig. 31 illustrates the sealing ring in position, and the importance of not overcompressing the valve spring.

The closed coiled end of the valve springs must be fitted to the cylinder head.

Cylinder Head—To refit

The faces of the cylinder block and cylinder head should be thoroughly cleaned and the cylinder bores wiped out and smeared with engine oil. Copper asbestos cylinder head gaskets should be given a

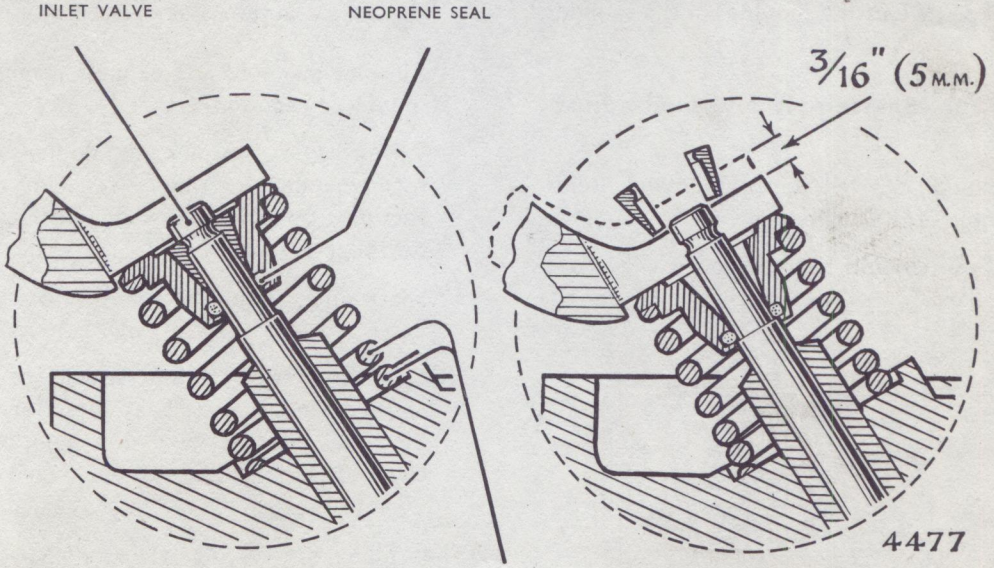

Fig. 31. *Correct method of replacing valve springs and valve spring caps and seal—Dual valve springs are used on Series IV engines onwards*

coating of "Wellseal" jointing compound before fitting. The gaskets are stamped with the word TOP, and must be fitted with this word uppermost. All cylinder head bolt holes in the cylinder block should be blown out with clean compressed air.

The cylinder head bolts must be evenly tightened to the recommended torque given in the General Data Section. This should be done by means of a torque spanner after cleaning and lightly oiling the bolt threads, and under the bolt heads. Dry, dirty or paraffin wetted bolts will give a false torque wrench figure. The correct tightening sequence is shown in Fig. 32.

Replacement Cylinder Heads

These cylinder heads are supplied without sparking plug tubes and a set of six tubes must be obtained with each replacement cylinder head.

The tubes in the discarded cylinder head cannot easily be removed as there is nothing on the tube to which an extractor could be fitted.

Jointing material should be painted around the bottom end of each tube before pressing the tube into position on its locating shoulder in the cylinder head.

Top Overhaul—Reassembly and final adjustments

Attention should be given to the following items during assembly of the engine:—

Water hoses should be renewed if they have become hard.

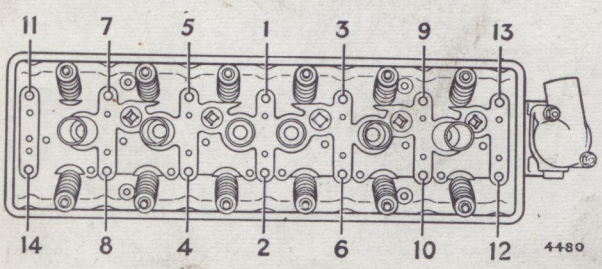

Fig. 32. *Correct tightening sequence for cylinder head nuts*

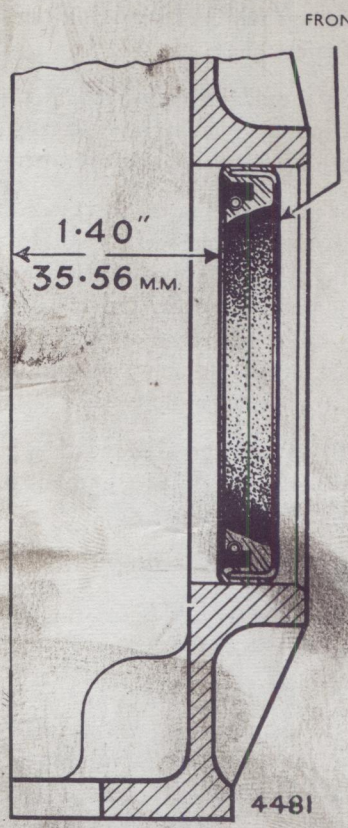

Fig. 33. *Correct position of oil seal in timing cover*

All inlet manifold and exhaust manifold joints should be renewed.

Valve rocker adjustment should be made to the recommended setting given in the Data Section, and reset when the engine is thoroughly hot.

Spark plugs should be renewed or serviced as described on page 17 of this section.

Contact breaker points should be carefully cleaned and adjusted as described in the Electrical Section, and the ignition timing checked and adjusted as described on page 20.

When filling the cooling system the heater water control valve must be fully open. The engine should be started and the heater outlet pipe connection

slackened off on the water control valve, to allow air to be displaced as the heater system fills. Immediately water appears at the slackened connection, it should be tightened. Finally, the radiator should be topped up to replace the water that has filled the heater system.

TIMING COVER

To remove

The following items must be removed:—

Drain and remove radiator.

Remove grille.

Remove fan blades.

Remove water pump.

Turn engine so that T.D.C. line on the damper rim comes opposite to the pointer on the timing case.

Remove crankshaft pulley and damper.

Remove starting handle dog.

Withdraw crankshaft pulley boss.

Remove bolts securing timing cover to cylinder block and lift off timing case.

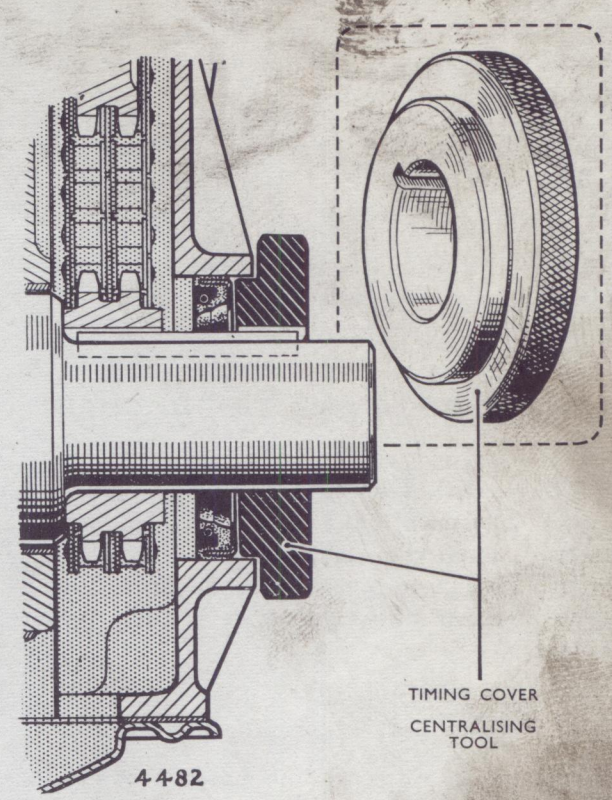

Fig. 34. *Centralising timing cover*

Oil Seal—To renew

A renewable oil seal is fitted in the timing cover as shown in Fig. 33. It should be noted that the oil seal is fitted with its sealing lip pointing inwards toward the timing chain and its outer face at the distance shown from the outside of the timing case joint face.

These oil seals have a long life. Section Q of this manual gives very full details of oil seal fitting, and it will be found helpful to refer to this section.

To refit

The joint faces of the timing case and cylinder block must be carefully cleaned and the timing case refitted with a new joint.

It is most important that the timing case oil seal bore is concentric to the crankshaft and this is obtained by using the Churchill timing case centralising tool as shown in Fig. 34. The tool reference number is, RG.221.

As the crankshaft damper fixing bolt holes are equally spaced, the damper can be incorrectly replaced. To prevent this the engine was turned to bring Nos. 1 and 6 pistons to T.D.C. The damper must be bolted in a position that brings the timing mark on its rim opposite to the pointer in the timing case. This ensures that the mark on the damper rim will indicate T.D.C. correctly when it is opposite the pointer.

TAPPETS

To remove and refit

This operation necessitates the removal of the cylinder head, as the tappet bores are larger than the holes through which the push rods operate.

Tappets should be marked with an indelible pencil so that they can be replaced in their original positions.

The tappets should be a good fit in their respective bores and free to rotate.

Tappet faces in contact with the cams should be free from pitting and wear over the whole area. Regrinding of the tappet faces is not recommended as it reduces the hardened thickness of face material.

TIMING WHEELS AND TIMING CHAIN

The camshaft is driven at half engine speed by a double roller chain which is automatically kept in correct adjustment by a Renolds Automatic Adjuster. Lubrication of the chain is by oil fed through the adjuster on to its rubbing face. Full details of automatic tensioner are given in later paragraphs.

To remove

Remove timing case as previously described. Press down the chain automatic tensioner and lock in this position. See Automatic Chain Tensioner.

Turn back lockwasher on camshaft sprocket fixing bolt and remove the bolt.

Withdraw both sprockets together. If pullers are not available, the sprockets may be CAREFULLY levered off with suitably ended levers.

To refit

Turn the engine so that the crankshaft key is at its top position as shown in Fig. 35. This is the Nos. 1 and 6 T.D.C. position.

Push the crankshaft sprocket on to the crankshaft until it is approximately $3\frac{3}{4}$" (95·25 mm.) from the shoulder of the front crankshaft journal.

Fit chain to crankshaft and camshaft sprockets so that the timing dots are opposite when the sprockets are in the position shown in Fig. 35.

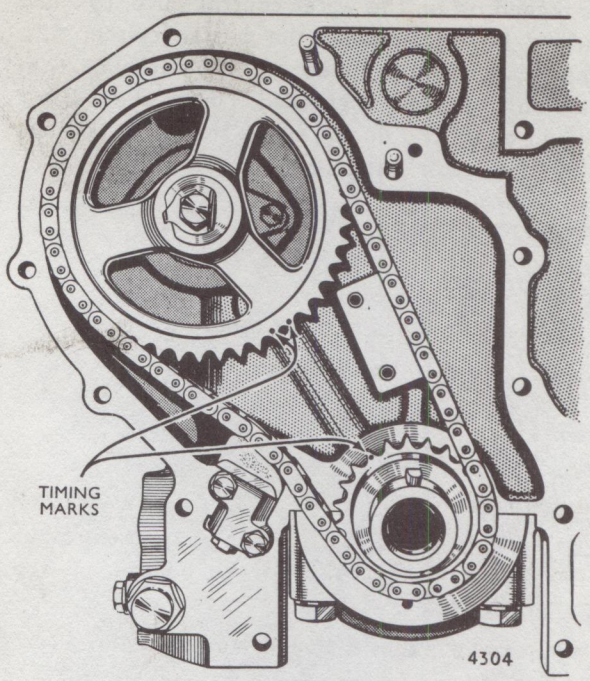

Fig. 35. *Timing wheel timing marks*

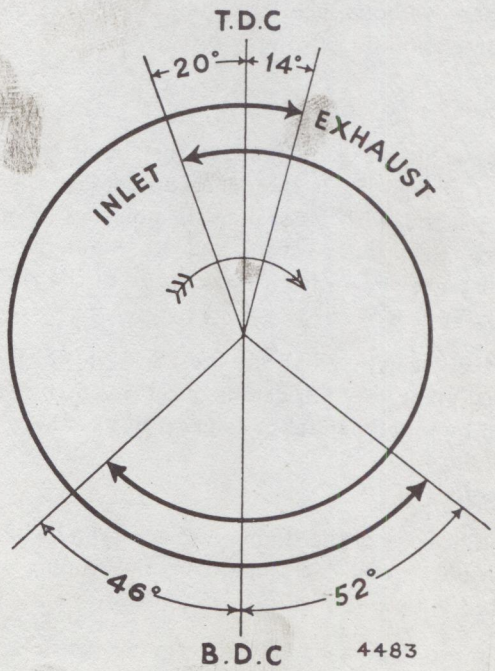

Fig. 36. *Valve timing diagram*

Turn camshaft so that its key will line up with the keyway in the camshaft sprocket and start camshaft sprocket. This sprocket MUST be pulled on the camshaft by a suitable length threaded bolt.

Tap the crankshaft sprocket and pull on the camshaft sprocket until both come against the shoulders on the crankshaft and camshaft.

Replace and tighten camshaft sprocket fixing bolt and washer using NEW locking plate.

Release chain automatic tensioner (see To Replace Tensioner).

Refit timing cover.

Checking Valve Timing

Provided the timing chain has been correctly assembled on to the sprockets the engine valve timing will be correct as shown in Fig. 36. Should an occasion arise when it is suspected that valve timing is incorrect through wrong replacement of the timing chain, the following check can be made with the engine either in or out of the car.

1. Turn the engine so that No. 6 cylinder inlet valve is fully open.

2. Set No. 1 inlet valve rocker clearance to ·021″ (·53 mm.). It is most important that this clearance is used and NOT the normal rocker clearance.

3. With No. 1 inlet rocker set to this special clearance the 20° B.T.D.C. opening point of No. 1 inlet valve can be checked in the following manner:—

   Clean and chalk the crankshaft damper rim for about $1\frac{1}{2}$″ (38 mm.) in a direction before the T.D.C. mark on the damper rim.

   From the damper T.D.C. line mark off a line with dividers, on the damper rim 1·3″ (33 mm.) before the T.D.C. position, and pencil a line clearly on to the chalked rim.

   The 1·3″ (33 mm.) dimension is the chord distance for a 20° angle at the damper rim radius of 3·75″ (95·25 mm.), and because it is a chord length, dividers set to the dimension of 1·3″ (33 mm.) must be used for marking off.

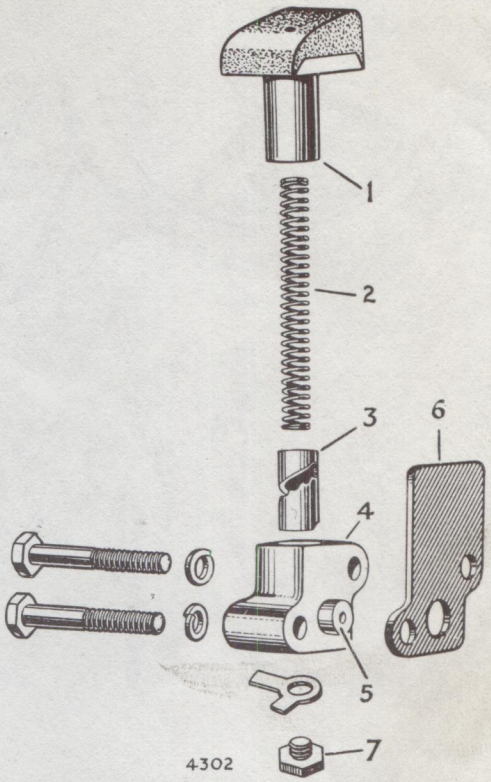

Fig. 37. *Exploded view of timing chain tensioner*

4. Turn the engine until No. 1 inlet valve just begins to open, and then a further $1\frac{3}{4}$ turns to bring No. 1 cylinder on the exhaust stroke a quarter of a turn before No. 1 inlet valve opens.

5. Turn the engine very slowly until No. 1 inlet rocker just grips a ·0015″ (·03 mm.) feeler. If the valve timing is correct the pencil line made on the damper rim will come opposite to the pointer on the timing case.

6. Reset No. 1 inlet rocker to its normal clearance with No. 6 inlet valve fully open.

TIMING CHAIN AUTOMATIC TENSIONER

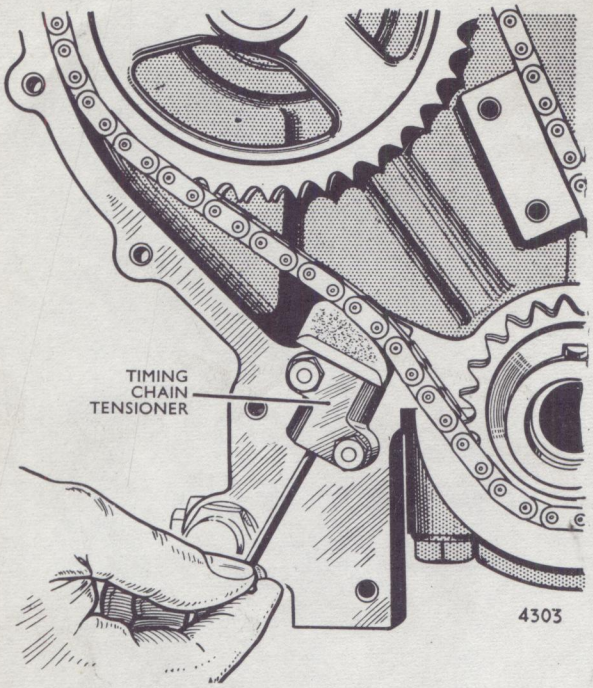

Fig. 38. *Releasing timing chain tensioner*

Details of Operation

Fig. 38 shows the Auto Adjuster in position on the engine, and Fig. 37, dismantled, each part being numbered for easy reference.

An oil-resistant rubber slipper mounted on a plunger (1) bears on the outside of the chain. The light spring (2) cased by the restraint cylinder (3) and the plunger in combination with oil pressure, holds the slipper head against the chain, keeping it in correct tension.

Return movement of the slipper head is prevented by the limit peg at the bottom end of the plunger bore engaging the nearest tooth in the helical slot of the restraint cylinder (3). The oil enters the adjuster body (4) via a small drilling in the locating spigot (5) and passing through the hole in the slipper head, lubricates the chain. The backing plate (6) provides a suitable face along which the slipper head can work.

To remove Tensioner

Remove the bottom plug (7) which provides access to the hexagonal hole in the bottom of the restraint cylinder. Insert an Allen key ·125″ (3 mm.) across flats, into this hexagonal hole and turn the key in a clockwise direction until the slipper head remains in the retracted position. Remove the securing bolts and detach the adjuster.

To replace Tensioner (See Fig. 38)

Bolt the adjuster into position. Remove the bottom plug and insert the Allen key, turning slowly in a *clockwise* direction until the slipper head moves forward with an obvious click. Replace the bottom plug and secure with the tabwasher provided.

CAMSHAFT

To remove

Remove timing case, timing wheels with timing chain and tappets, as previously described.

Remove the fuel pump, carefully noting the number of joints used between the pump and cylinder block because these control the fuel pump output pressure.

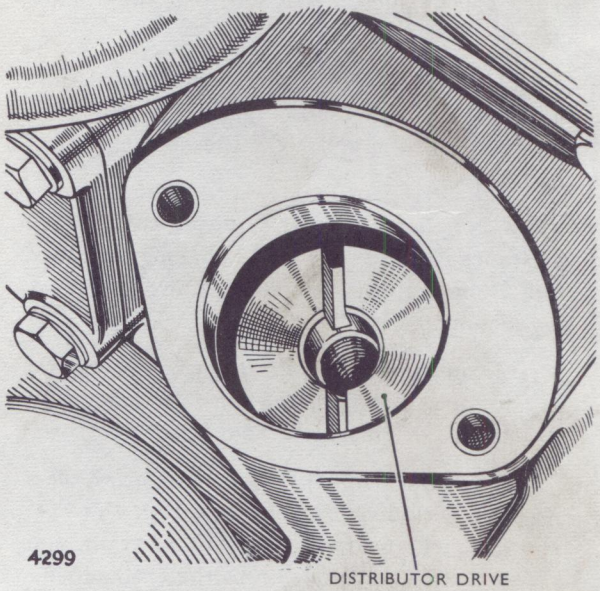

Fig. 39. *Position of distributor drive slot for No. 1 T.D.C. firing Series I and II only*

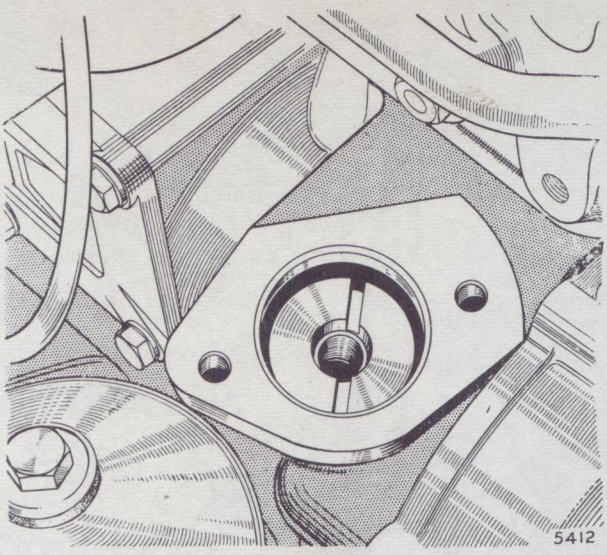

Fig. 39A. *Position of distributor driving slot for No. 1 T.D.C. firing—Series III*

Disconnect the distributor L.T. feed cable and vacuum advance pipe.

Remove the two set bolts securing distributor fixing clamp to the distributor mounting boss on the cylinder block. Lift out distributor.

Remove the two bolts securing the distributor mounting bracket to the cylinder block and screw a suitable length $\frac{7}{16}$"×20 U.N.F. bolt into the threaded bore of the distributor drive shaft. Lift out shaft.

Remove the two bottom centre fixing bolts of the two tappet covers, noting that copper washers are used under the heads of these bolts. The threaded holes of these two bolts protrude into the camshaft chamber and by removing these bolts first, the oil in the camshaft chamber can be drained before removing the cover plates.

Remove the ignition coil.

Remove the remaining bolts securing the valve chamber covers and take off the covers after the oil in the tappet chamber has drained off.

Remove sump. Disconnect oil pump outlet pipe and remove oil pump.

Remove the two bolts securing the camshaft thrust plate to the cylinder block and carefully withdraw camshaft, using one hand in the camshaft chambers to guide the camshaft through its bearings, as it is withdrawn.

Camshaft Bearings—To renew

Camshaft bearing clearance can be measured by means of feeler gauges. These clearances should always be checked during a complete engine overhaul and when investigating cases of low oil pressure, after finding that the more obvious causes are not responsible. The maximum permissible clearance is given in the Data Section.

The bearings are renewable and can be withdrawn with a Churchill RG.32 camshaft bearing bush removing and replacing tool, using adaptors RG.32–5.

New bearings are pre-finished to size and when pulling bearings into position it is important to ensure that the oil feed hole in the bearing lines up with the oil feed hole in the cylinder block.

Camshaft—To replace

This is a reversal of the removal procedure but the following points should receive careful attention:—

The timing wheels and chain must be fitted with the timing marks in the position shown in Fig. 35.

The engine must be positioned at No. 1 T.D.C. at the commencement of the firing stroke, when the distributor drive gear assembly is replaced in the position shown in Fig. 39 or 39A.

The fuel pump must be replaced with the same number of joints as found on dismantling.

After replacing the distributor the ignition should be checked and adjusted by one of the methods described under IGNITION TIMING in this Section.

Camshaft End Float

During a complete engine overhaul camshaft end float should be checked by means of a clock gauge set to measure the float on the camshaft sprocket (see Fig. 40). If the reading obtained is above the permissible figure given in the Data Section, a new camshaft thrust plate should be fitted and the end float rechecked.

PISTON AND CONNECTING ROD ASSEMBLIES

Description

Aluminium alloy split skirt pistons are used. The gudgeon pins, which are fully floating, work in bushes pressed into the connecting rod little ends and circlips are used to locate the gudgeon pin in its bore in the piston. Details of piston differences and correct method of fitting are given under the heading of PISTON later in this section.

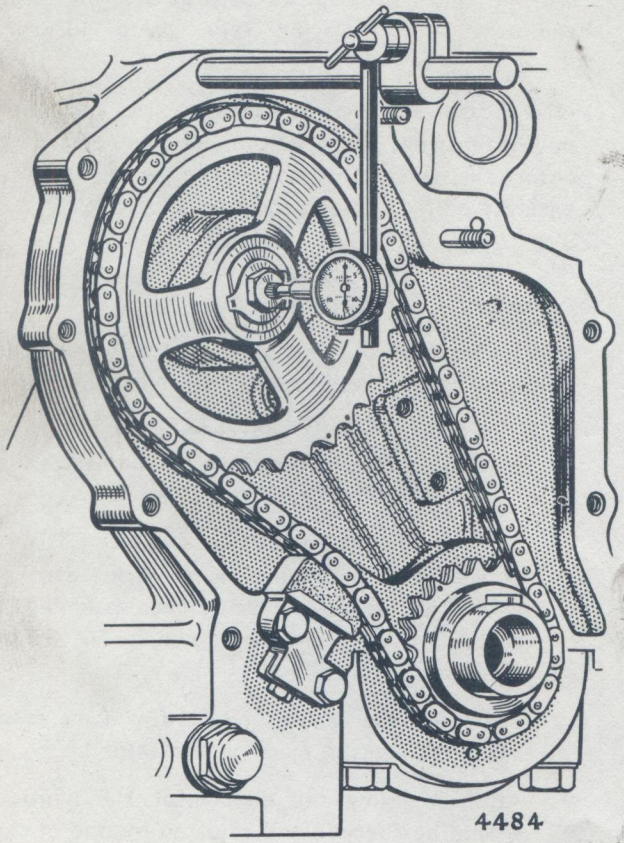

Fig. 40. *Checking camshaft end float*

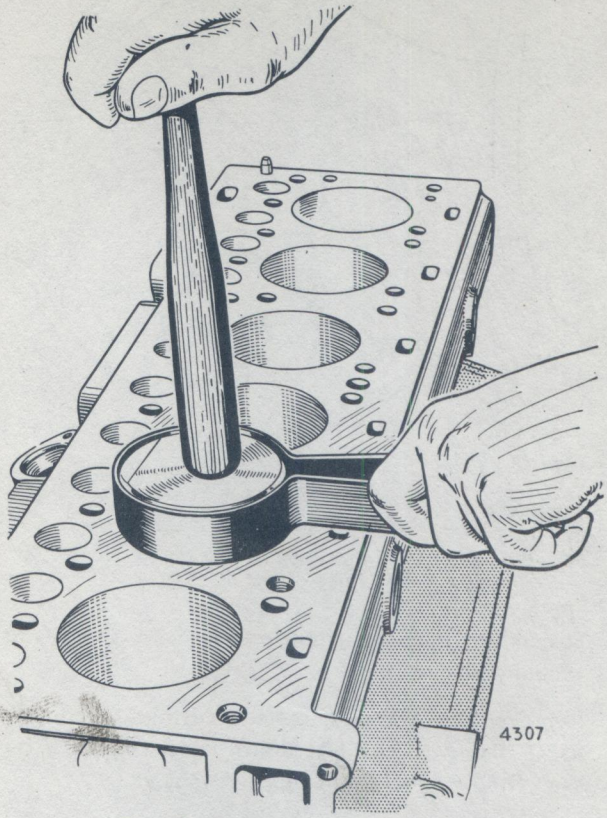

Fig. 41. *Piston ring compressor in use*

Piston ring details and fitting are given under PISTON RINGS.

The connecting rods are steel stampings and have separate renewable steel backed white metalled bearing shells. These bearing shells are located by small lips that fit in similar sized recesses of the upper and lower halves of the connecting rod. The connecting rod cap is located to the rod by the unwaisted parts of the two high tensile connecting rod bolts. Big end nuts are of the self-locking type.

To remove Pistons and Connecting Rods

Pistons and connecting rods cannot be withdrawn through the crankcase because the pistons will not pass the main bearing bosses. The following operations are necessary:—

Remove sump.

Remove oil pump.

Remove cylinder head.

For purposes of identification the connecting rods are stamped 1 to 6 from the front of the engine, the number being stamped on the upper and lower halves of the connecting rods.

Remove big-end nuts and caps complete with bearings carefully noting the numbers 1 to 6 stamped on the connecting rod and cap.

Remove carbon at the tops of the cylinder bores and push the connecting rods and pistons up the cylinder bores and withdraw and replace connecting rod caps and nuts on to the connecting rod bolts.

The pistons are also stamped 1 to 6 from the front of the engine and are fitted to the appropriate connecting rods so that the split sides of the piston are all to the left-hand side of the engine as viewed from the rear.

The connecting rods are assembled to the pistons with the oil jet holes opposite to the split sides of the pistons.

To refit Pistons and Connecting Rods

Check that the pistons and connecting rods are correctly assembled and arrange piston ring gaps so that they are alternately spaced at 180° with the gaps at the front and rear faces of the piston.

A piston ring compressor will be needed to insert the piston rings into the cylinder bore, and suitable compressors are the Churchill tool No. RG 203.

The thin scraping edges of the slotted oil control ring are easily broken if an improvised ring compressor is used.

Tighten the connecting rod cap nuts to the correct torque given in the Data Section under CONNECTING ROD.

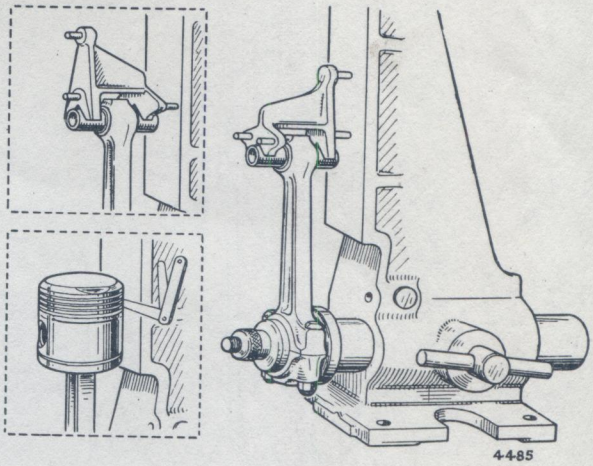

Fig. 42. *Checking connecting rod alignment*

The self-locking nuts must not be used again if they can be screwed on with the fingers.

To remove Gudgeon Pin

Scrape away carbon that has accumulated in the outer ends of the gudgeon pin bores. Remove circlips retaining gudgeon pin in piston with circlip pliers.

As the gudgeon pin is a finger push fit in the piston when the latter is cold, the piston should be warmed up by immersion in hot water before pushing out the gudgeon pin.

The gudgeon pin must not be driven out while it is tight in the piston.

Connecting Rod Alignment

After fitting and honing, or reaming a new connecting rod little end bush to size, the connecting rod alignment should be checked. The Churchill tool for this operation is illustrated in Fig. 42.

Connecting rod alignment should also be checked when the rubbing marking on the front and rear faces of the piston is not even around the piston skirt.

Connecting rods can be straightened in a large bench vice using special vice jaws.

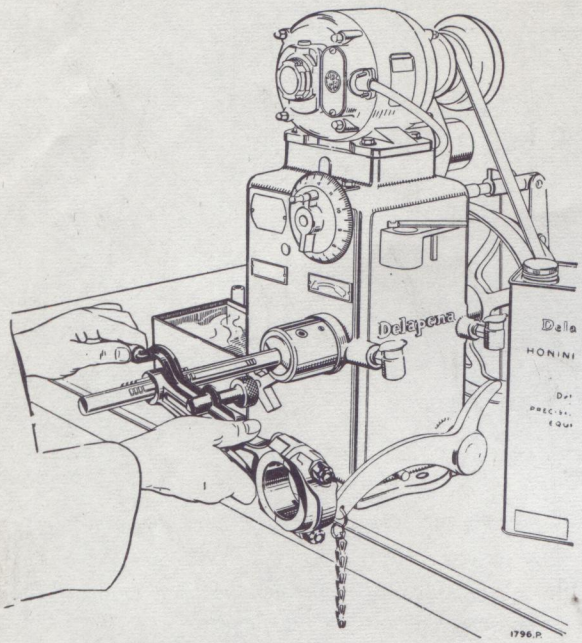

Fig. 43. *Honing connecting rod little end bush*

Gudgeon Pin Fits

At a room temperature of 70°F. (21°C.) the gudgeon pin should be a finger push fit in the piston and only just free in the connecting rod little end bush.

.003" (·076 mm.) oversize gudgeon pins are available for service use.

Delapena Precision Honing Machine "M.A."

This honing machine is recommended for honing new little end bushes to standard size or to + ·003" (·076 mm.) oversize. It can also be used to hone out the piston bosses to take the oversize gudgeon pin.

The following equipment is used with this machine.

Mandrel	SL.900
Truing sleeve	ST.900
Roughing stone	E.22.O
Finishing stone	E.F.6.F
Polishing stone	E.50.K

Delapena connecting rod clamps.
Delapena honing fluid.

Complete instructions for the operation of this machine are contained in a booklet (Publication No. C.3/49) of which two copies are sent with each machine by the suppliers, Delapena & Sons Ltd., Zona Works, Cheltenham, England.

In using the Delapena honing machine it is stressed that the work must be kept as cool as possible at all times. Only by so doing can an accurate and round bore be achieved. Heating of the little end boss which can occur due to pressure of the hone, can cause the boss to go "out of round" temporarily. This will not occur if a receptacle containing honing fluid is kept by the machine and the work dipped in it frequently.

Honing Little End Bush (See Fig. 43)

Fit the appropriate mandrel in the machine with roughing stone and true up stone with truing sleeve; hone out the little end bush until it is ·0005" (·12 mm.) below the finished diameter.

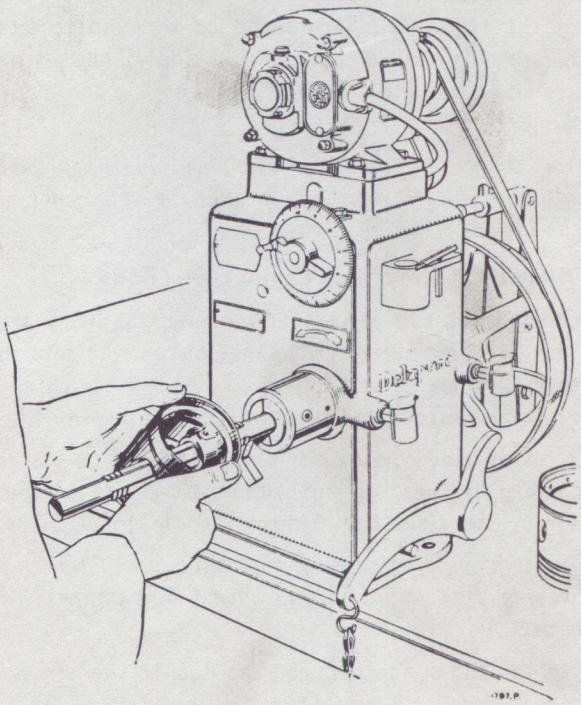

Fig. 44. *Honing piston bosses*

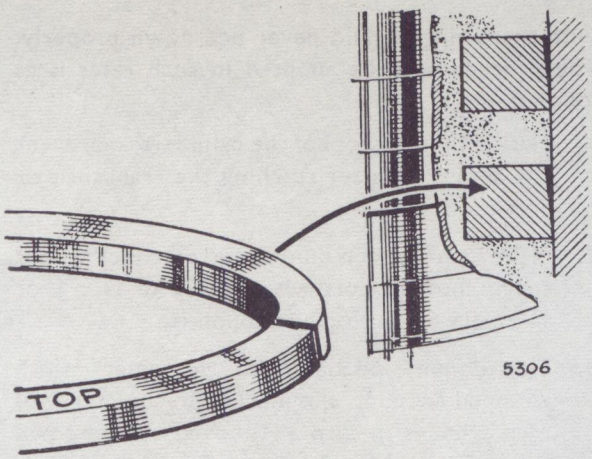

Fig. 45. *Correct assembly of taper compression rings—Series I*

To determine this size, useful check gauges can be made by reducing a 1″ (25 mm.) length of standard and +·003″ (·076 mm.) oversize gudgeon pins to ·937″ (23·799 mm.) — ·9372″ (23·804 mm.) for the standard gudgeon pin and ·940″ (23·876 mm.) — ·9402″ (23·881 mm.) for the oversize gudgeon pin. Proceed with the honing, using a finishing stone in the mandrel. The stone must be trued with the truing sleeve before honing is commenced. In performing this last stage of honing great care is necessary as only ·0005″ of material has to be removed in order to allow the gudgeon pin to enter.

Honing of Piston Bosses (See Fig. 44)

The piston bosses can be honed out to take the ·003″ (·076 mm.) oversize gudgeon pin which should be a tight finger push fit with the piston at 70°F. (21°C.). The plug gauge, previously described, is used to determine when the boss bores are to within ·0005″ (·012 mm.) of the required size.

PISTON RINGS—Details

The following piston rings are fitted to all new production engines.

Top Compression Ring—Series I

This ring is chromium-plated and has parallel sides.

It may be fitted either way up.

Second and Third Compression Rings—Series I

These rings are unplated and have taper side faces and must be fitted as shown in Fig. 45. Incorrect fitting will considerably increase oil consumption.

Fourth, Oil Control Ring—Series I

This is a Briflex scraper ring which has unplated rails. Briflex scraper rings consist of two thin unplated rings (rails) spaced apart by a slotted cast ron spacer that does not contact the cylinder wall.

A spring expander ring, fitted in the bottom of the piston ring groove forces the two thin piston rings (rails) against the cylinder wall.

Bottom Groove—Series I—Pistons

No ring is fitted in this groove on new engine.

The groove is provided for service use to enable a suitable extra oil control ring to be fitted, if needed, after a large mileage has been covered.

Top Compression Ring—Series II onwards

This is a cast iron chromium-plated ring with the word "Vacrom" etched on one of its widest faces.

It may be fitted either way up and is specially treated to assist bedding in. This treatment leaves it a dull grey and faintly red colour.

Second Compression Ring—Series II onwards

To provide more rapid running in and to assist in oil control, a stepped periphery compression ring is fitted in the second groove from the piston crown. It is most important that this piston ring is correctly fitted with the step downwards, that is, with its widest face towards the top of the piston. This face is marked "TOP" to indicate that it should be fitted uppermost. See Fig. 46. Incorrect fitting will result in higher oil consumption.

Third, Oil Scraper Ring—Series II onwards

A slotted type oil control ring is fitted in the third groove of the piston. This ring has two very narrow scraping edges and careful fitting is needed to prevent breaking these very thin edges. See "To refit pistons and connecting rods".

To fit

In order to ensure that the ring gaps will be within the limits given in the Data Section when the piston is fitted in the cylinder bore, fit the rings first to the cylinder bore and check the ring gap with a feeler gauge (see Fig. 47).

Fit rings to piston, making sure that the rings checked at No. 1 cylinder are fitted to No. 1 piston and so on. With a feeler gauge, check for correct vertical clearance of the rings in the grooves, which should be ·002"/·0035" (·05 mm/·09 mm.) for both compression and scraper rings (see Fig. 48). Fit the rings to the pistons in such a way that the ring gaps are spaced alternately at 180° with the gaps on the front and rear sides of the piston.

Chromium Plated Top Piston Ring

Cylinder bore wear is considerably reduced by the use of these plated rings, but they require a greater mileage to bed down.

If for any reason an engine equipped with chromium rings has to have the pistons removed or replaced, it is recommended that note should be taken of the position of each top ring as the piston is withdrawn so that these top rings may be replaced—assuming that they are in good condition—the same way up with the gaps in the same position as before, in order to avoid the necessity of going through the bedding down process all over again.

Where the need arises to fit new chromium rings to polished (part worn) bores, it will be necessary first to remove the glaze from the bores, as otherwise these rings would never bed down properly. The procedure to be adopted in such cases is as follows:—

1. Mask off the bottom of the cylinders to prevent any abrasive matter reaching the crankshaft or crankcase.
2. Make up a wooden dummy piston which will fit snugly into the bore with a piece of No. 1 or 1½ emery cloth wrapped round it.
3. This dummy piston, with the emery cloth wrapped round it, should then be inserted into each cylinder in turn and moved up and down the bore for about 3 minutes (each cylinder) at the same time rotating it first one way and then the other until the entire cylinder wall is covered with criss-crossed abrasions.
4. Wash down the bores thoroughly and dry them out ensuring that no foreign matter finds its way into the crankcase.

PISTONS

Differences

The different compression ratios have been obtained by varying the height of the piston crown above the gudgeon pin bore.

Dimensional details and method of identifying the different pistons used to obtain the various compression ratios are given in the Data Section under

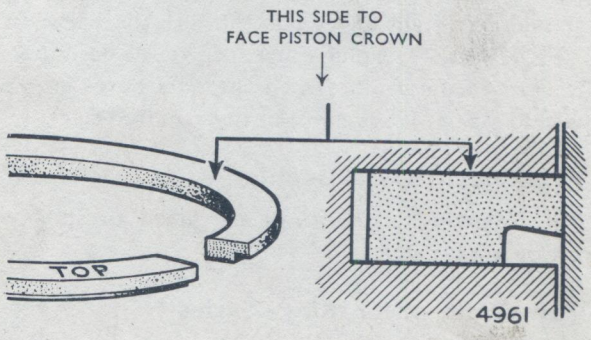

Fig. 46. *Correct assembly of second compression piston ring on Series II onwards*

Fig. 47. *Checking piston ring gap*

PISTON. When changing pistons a careful check should be made to ensure that a correct set is selected having similar identification numbers on the piston crown.

If the pistons are changed to alter the existing compression ratio it is important to see that the correct distributor is used. Reference to the Data Section under IGNITION will show which unit to use.

Piston and Cylinder Bore Grading

In manufacture pistons and cylinders are machined to the very close tolerance of ·0008" (·020 mm.) above and below the planned dimension of either the standard size or oversize dimension.

Within the top and bottom limits of the cylinder bore and piston diameter sizes, small variations occur. These are found when these items are inspected for size and GRADE indication letters are stamped on the centre of the top right-hand side of the cylinder block and on the top of the piston.

The difference between the grade sizes is ·0004" (·010 mm.).

Piston diameter and cylinder bore grading sizes are given in the Data Section at the front of this manual. These will be found useful if a piston has to be replaced during the early life of the engine.

Grade Indication Letters

For new cylinder bores the grade indicator letters are A, B, C and D, and for pistons A, B, C, D, E and F. Pistons graded to E and F are generally used for service replacements only.

When the letter "T" is seen stamped as an additional letter to the cylinder bore or piston grading letter, it should be ignored as its only use is in connection with the production selective assembly grading system.

Fitting Piston to Cylinders

On new production engines pistons are fitted to cylinder bores on a grade to grade basis. For instance, a Grade B piston is fitted into a Grade B cylinder bore. This information is given for guidance only and does not apply once the engine has been partly run in. Pistons should be fitted to

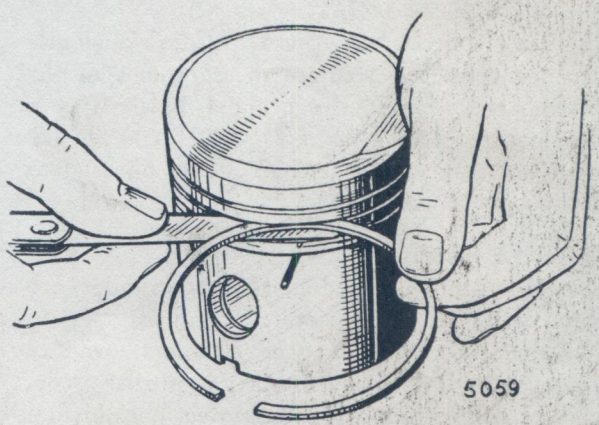

Fig. 48. *Checking piston ring vertical clearance*

cylinder bores by means of a feeler and spring balance as this is the most reliable method of ensuring correct piston clearance on run-in or rebored cylinder bores.

To Measure Piston Clearance

Series I—III pistons

Clearance is measured at the bottom of the piston skirt at right angles to the gudgeon pin bore.

To measure piston clearance insert the piston upside down in the cylinder bore with a $\frac{1}{2}$" × ·0015" (12·7 mm. × ·04 mm.) feeler between the piston thrust face and the cylinder bore (see Fig. 49). It should require a pull of 3–4 lbs. (1·3–1·8 kgs.) to withdraw the feeler.

These figures only apply to new pistons fitted to new rebored or honed cylinder bores that have been wiped dry from an oiled condition.

Series IV pistons

The clearance of these close fitting solid skirt pistons cannot be checked with ·0015" (·04 mm.) feeler strip because the required clearance is less than this feeler thickness.

The pistons must therefore be fitted by measuring the cylinder bore diameter, at the bottom of the bore, subtracting the mean (average) piston clearance and from the dimension obtained, select the grade of piston needed.

Example:

Bore diameter, minus piston clearance = piston grade size.

3·4377" — ·0008" = 3·4369" (grade C).

Satisfactory fitting of these pistons obviously depends upon the accurate measurement of the bore diameter when the cylinder block is at a temperature of 60°—70° F (15°—21° C). A dial gauge set to a RING GAUGE should be used to obtain the diameter.

Oversize Pistons

Oversize pistons supplied for rebored cylinders are based on Grade "B" diameter.

For service use with rebored cylinders, oversize pistons will not be supplied to any particular grade, since grading as previously explained, is incidental to manufacture.

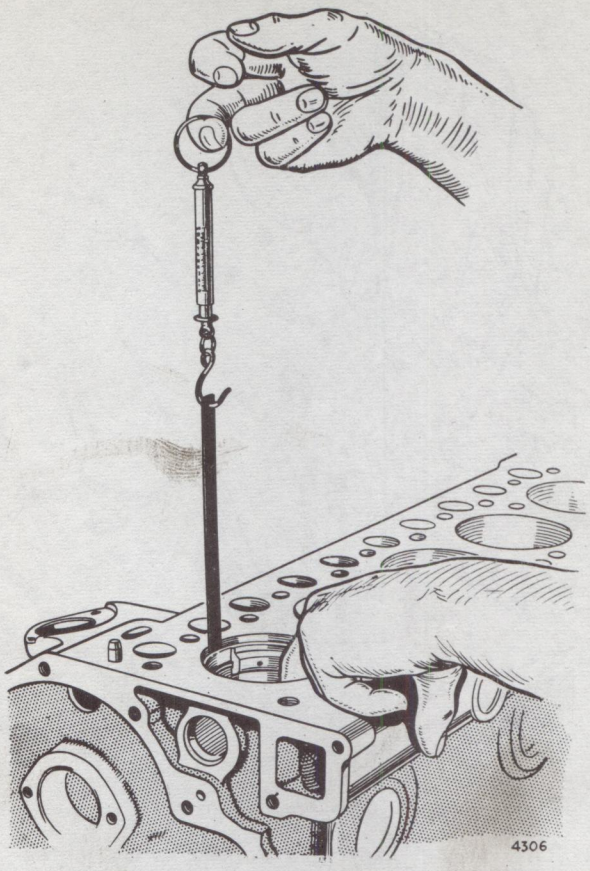

Fig. 49. *Checking piston clearance in cylinder bore*

TO REBORE BLOCK AND FIT NEW PISTONS

It is essential to check the skirt diameter of each individual piston to be fitted to a particular cylinder so that the cylinder can be bored with precision to suit it.

The cutting tool (or tools) of the boring machine must be set to bore the maximum diameter of the piston, plus the prescribed piston clearance in bore. For correct clearances see "FITTING PISTONS" in this Section on page 45. It is advisable to regrind and reset the cutter or cutters after completing each cylinder bore.

Bores must be parallel and round to the limits given in the Data Section; this should be checked by the use of a cylinder gauge with dial indicator.

Cylinder bores should be honed to the best possible finish after boring, and obviously due allowance must be made for this when setting the boring tool.

Standard and Oversize Cylinder Bore Diameters

Subject to the grade variations previously referred too, the standard cylinder bore diameters are +·005″ (·127mm.),+·02″ (·508 mm.) and +·04″ (1·061 mm.)

CYLINDER LINERS

Cylinder liners may be fitted when the maximum cylinder oversize has been reached.

Series I

The outside diameter of the liners is 3·409″—3·410″ (86·58—86·61 m.m.).

The cylinders should be bored out to a diameter of 3·405″—3·406″ (86·61 m.m.).

Series II

The outside diameter of the liners is 3·597″—3·598″ (91·36—91·39 mm.).

The cylinders should be bored out to a diameter of 3·593″—3·594″ (91·26—91·29 mm.).

After pressing into the cylinder block the liners should be bored out to take the new pistons being fitted.

To fit

Remove engine from chassis and dismantle.

Measure external diameters of the liners and the cylinder bores below piston ring travel.

Bore out the cylinder bores to suit liners so that each liner will have the correct interference fit of ·003″—·005″ (·076—·127 mm.). It is very important that these figures are strictly adhered to. Every possible precaution must be taken to ensure concentricity and correct size for the full length of the bore.

To facilitate fitting, a ½″ (12 mm.) length of "lead-in" is provided at the lower end of the liner.

The liners must be started perfectly square to the cylinder head face and pressed down so that their top faces are exactly flush with the top of the cylinder block.

When the liners have been pressed in they require boring or honing to suit the new pistons so that these have the fit and clearance previously described.

Liners can be removed by pressing them on their lower ends. They cannot be pressed downwards as they will not pass the main bearing webs.

Before fitting liners into the cylinder block from which liners have been removed, check the cylinder for concentricity and correct size for the full length. If the diameter is in excess of the figures previously given the correct interference fit will not be obtained.

Provided the conditions set out above are fulfilled, press in the new liners. Finally, bore and hone the liners to suit the standard pistons.

CYLINDER BLOCK CORE PLUGS

Cupped discs are used to seal the water jacket orifices in the cylinder block. They are tapered to allow the minor diameter to enter the orifice, thus providing an interference fit when driven fully home. A stepped drift should be used to replace the plugs, so that they are driven in by their outer circumference. Jointing compound should be used when fitting these plugs.

BIG-END BEARINGS

To renew

Separate steel backed thin wall white metal bearings are used. Connecting rods and bearing shells are made to a very high standard of accuracy that gives a running clearance given in the Data Section when the big-end nuts are correctly tightened to the torque wrench figure also given in the Data Section. Provided the crankshaft big-end journals and connecting rods are in good condition, big-end bearing shells may be renewed without any hand fitting. Ensure that the locating lips on the bearing shells fit in the correct side of the connecting rod and caps. CONNECTING ROD CAPS MUST NOT BE FILED.

Normally the big-end bearings should not require attention until a complete engine overhaul becomes necessary.

Bearings —·020″ (·508 mm.) —·040″ (1·016 mm.) undersize, can be obtained for use with reground crankshafts which are available in the same undersizes.

MAIN BEARINGS

Differences

White metal main bearings are used throughout on all Series I and II engines. On Series III engines, and onwards, indium flashed copper lead main bearings are fitted to the front and two intermediate bearings, and a white metal rear main bearing.

To renew

Normally, by the time the main bearings require renewal the engine will need overhauling, and the fitting of replacement bearings will then present no difficulty.

Main bearings are available in the standard size and undersizes as detailed in "General Data" at the beginning of the Manual. It must be clearly understood that neither bearings nor caps can be filed to take up wear. However, if at any time one or more bearings should have to be renewed or removed for inspection, this can be performed quite satisfactorily without removing crankshaft from engine in the following manner:—

Drain engine oil.

Remove sump and oil pump.

If all bearings are to be removed only take one bearing cap off at a time. When renewing or inspecting all bearings start at one end of crankshaft and work through to the other end, but if only one bearing is to be inspected, remove the cap of that particular bearing.

Remove bearing cap bolts and lift off bearing cap. Slacken all the remaining bearing cap bolts one or two turns. This will assist the removal of the top halves of the bearings and prevent them from being nipped between shaft and cylinder block. The rear main bearing cap is drilled and tapped to assist in withdrawal with a Churchill puller RG.11A used with adaptor RG.11A–3 (see Fig. 50).

Bottom bearings may be removed from their caps by pushing the bearing on the opposite side to the locating lip.

The top half bearing may be removed by pushing with a thin piece of steel on the opposite side to the locating lip, and slowly rotating the crankshaft so as to assist extraction.

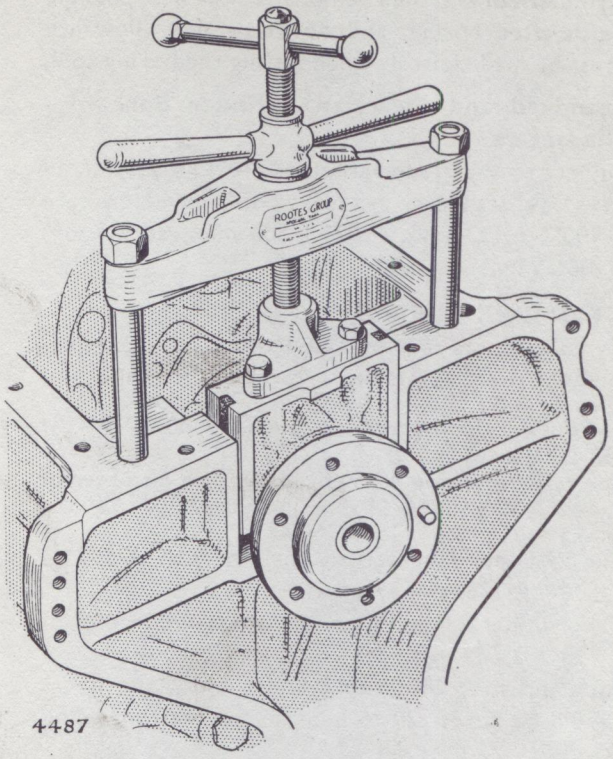

Fig. 50. *Removing rear main bearing cap*

Inspect the old bearings for cracks and scoring and renew as required. Top half bearings are replaced in a reverse manner to that described for removal. The following points should be noted:—

(*a*) Ensure that locating lips engage correctly with their respective recesses (see Fig. 51).

(*b*) Bearings are stamped according to their sizes and on renewal the same size must be fitted except when an undersize crankshaft is fitted. In such cases the correct undersize bearings must also be fitted.

(*c*) Top and bottom halves of bearings are identical, but the rear main bearing is not interchangeable with the three other main bearings, as it is a wider bearing.

Replace bearing cap and tighten bolts lightly before proceeding to the next cap. After having dealt with all bearings and lightly tightening the main bearing bolts, securely tighten bolts starting from the centre and working outwards.

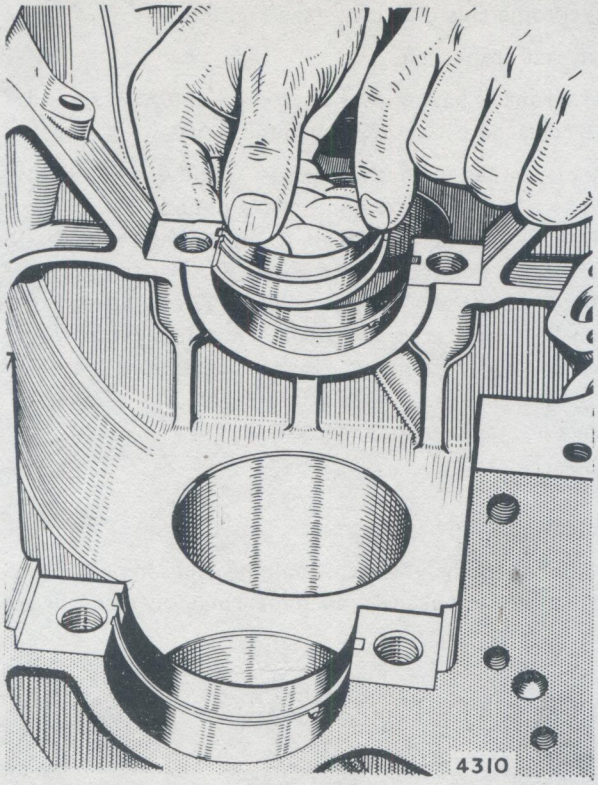

Fig. 51. *Main bearing shell locating lip*

As each bearing is tightened up, turn crankshaft to ensure it is working freely.

The correct torque wrench figure for main bearing bolts will be found in the Data Section.

When refitting bearing caps particular attention should be paid to the cleanliness of the bearing housing and cap mating faces, the oil thrower on the rear end of the crankshaft, and to the oil thrower recess in the rear main bearing housing and cap.

When fitting the felts to the rear main bearing cap it is essential that these are packed tightly throughout the whole length of the grooves, as described under, Crankshaft—to refit, see Fig. 54.

Crankshaft End Thrust

Crankshaft end thrust is taken by two semi-circular steel thrust washers with white metal faces located each side of the top half of the main bearing situated between No. 4 and 5 cylinders and are kept in position by the main bearing cap.

After removing this cap both washers can be removed by pushing them around the crankshaft (see Fig. 52).

If excessive end float is found on a crankshaft its thrust faces should be examined for wear, and if these are satisfactory a new set of thrust washers should be fitted. Washers must be installed with their white metal faces to the thrust faces of the crankshaft. Should the crankshaft thrust face be worn it should be reground to accommodate oversize thrust washers, or a replacement shaft fitted. ·005″ (·127 mm.) oversize thrust washers are available for use with reground crankshafts or as circumstances require.

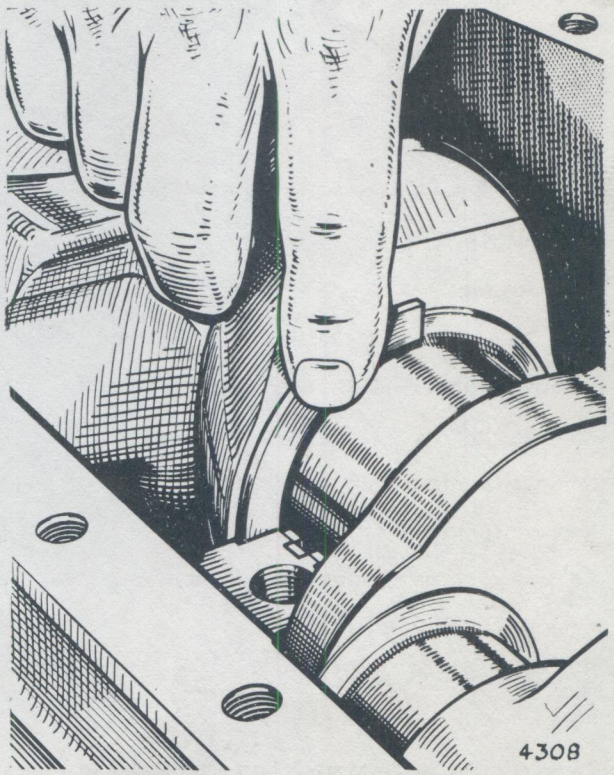

Fig. 52. *Removing or installing a crankshaft thrust plate*

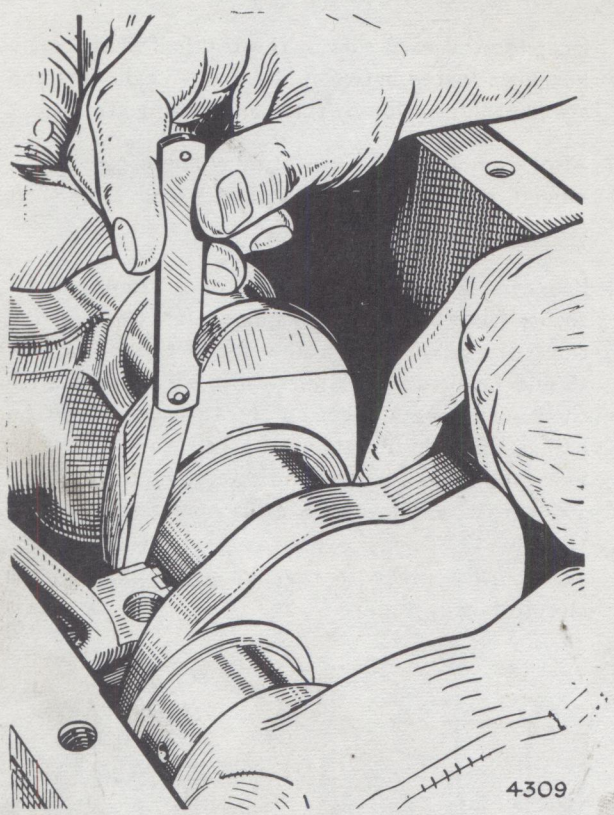

Fig. 53. *Checking crankshaft end float*

CRANKSHAFT

To remove

Remove engine from chassis and drain sump.

Remove cylinder head, push rods and tappets.

Remove timing cover.

Remove timing wheels and chain.

Remove sump and oil pump.

Remove connecting rods and pistons.

Remove clutch (see Section D).

Remove flywheel.

Remove main bearing bolts.

Remove main bearing caps. Some difficulty may be experienced in removing the rear cap on account of the felt oil seals, but the use of a suitable puller will overcome this difficulty (see Fig. 50).

Lift out crankshaft.

Crankshafts having oval or scored journals should be replaced by factory reground units.

Replacement undersize shafts —·020″ (—·51 mm.) and —·040″ (—1·02 mm.) are supplied, and these sizes should be employed if regrinding is undertaken outside the factory. New thrust washers should be fitted. Washers ·005″ (·13 mm.) oversize can be supplied to suit shafts on which the thrust flanks need regrinding. Journal dimensions, bearing clearances and endfloats are given in "General Data" section of this manual.

To refit

Check that oilways are clear.

Place the top halves of the main bearings in position, smear the crankshaft main bearing journals with

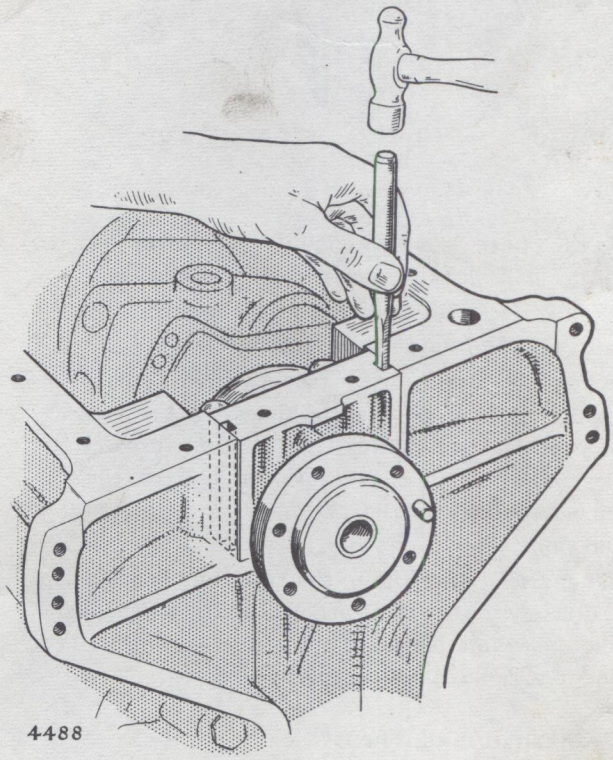

Fig. 54. *Packing sides of rear main bearing cap*

clean engine oil and place crankshaft in position, Install crankshaft thrust washers and check end-float of crankshaft ·002"/·004" (·051/·102 mm.) (see Fig. 53).

Fit lower halves of bearings together with main bearing caps.

Insert felt into grooves in rear main bearing cap, first smearing it liberally with jointing compound. Cut felt into short pieces and tap down tightly into the grooves with a punch (see Fig. 54).

Reassemble engine to instructions given in foregoing, and refill sump with fresh engine oil.

FLYWHEEL

To remove and refit

Remove gearbox and bellhousing (see Section E). Remove clutch (see Section D). Mark the clutch housing and flywheel with a small dab of paint to ensure that the clutch can be replaced in the same position. This is important as an incorrectly replaced clutch can cause vibration.

Scribe a line on the flywheel and crankshaft flange to ensure correct replacement of flywheel.

Knock flywheel tabwashers clear of setbolts.

Remove setbolts.

Remove flywheel from crankshaft flange. To prevent the flywheel from falling accidentally with possible damage to the starter ring, a stud of suitable size and length should be screwed into the top setbolt hole before levering off flywheel.

The flywheel can then be slid off of the long supporting stud.

To replace, reverse the above order of operations, observing the following notes:—

(*a*) Ensure that flywheel is replaced so that the scribed lines coincide.

(*b*) Make sure that surface of crankshaft flange and register in the flywheel are perfectly clean and free of burrs, as otherwise the flywheel may not seat properly on the crankshaft.

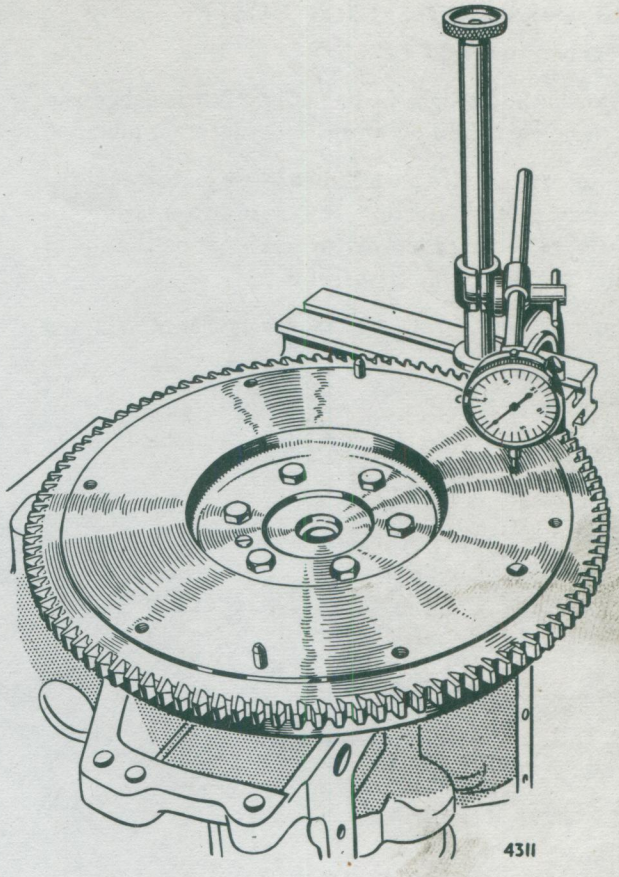

Fig. 55. *Checking flywheel run out*

(*c*) Should the dowel have come away from the flywheel when it was removed, tap it out of flywheel and refit in crankshaft.

(*d*) Tighten setbolts to the correct torque of 35—40 lbs. ft. (4·83—5·53 kgm.) and check for run-out at outer edge on flywheel clutch surface facing (see Fig. 55). A total clock gauge reading of ·003" (·076 mm.) must not be exceeded.

(*e*) Lock setbolts with new lockwashers.

CRANKSHAFT SPIGOT BUSH

To remove and refit

This bush is a tight fit in the crankshaft flange and can be extracted by means of an internal puller.

Alternatively, it can be filled with grease and displaced by the insertion of a close fitting drift into its bore. A sharp blow with a hammer on the end of the drift will remove the bush.

Insert new bearing in crankshaft flange and tap fully home.

Note

New bushes must be soaked in engine oil for 24 hours before fitting.

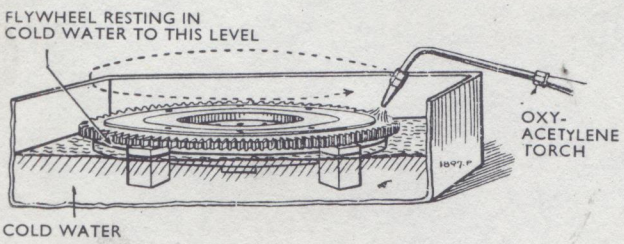

Fig. 56. *Removing flywheel ring gear*

STARTER RING GEAR

To renew (see Figs. 56, 57 and 58)

The starter ring is shrunk on the flywheel, and in the event of wear developing on the teeth of the ring the complete flywheel and ring can be renewed and the original returned for reconditioning by the manufacturers. However, if suitable equipment is available, the starter ring may be removed and replaced by adopting the following method.

Place flywheel in a suitable container of clean COLD water, supporting the assembly in the container by placing three or four metal blocks under the starter ring. Arrange the flywheel assembly so that it is partly submerged in water, with the starter ring uppermost the complete starter ring must be approximately $\frac{3}{16}$" (5 mm.) above the water level.

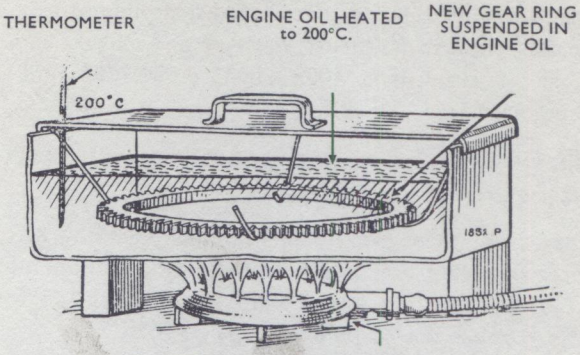

Fig. 57. *Heating flywheel ring gear*

Heat the starter ring evenly round its circumference (using an oxy-acetylene welding torch) thus expanding the ring, which will allow the flywheel itself to drop out. Remove flywheel from the water and thoroughly dry it.

Check height of securing lip by means of straightedge and feeler gauge. This dimension should be ·008" (·203 mm.). If the height of the lip is greater than ·008" (·203 mm.) it must be reduced by means of a lathe.

Ensure that registering faces of flywheel and starter ring are clean and free from burrs.

To fit new starter ring after completion of the operations as detailed above, proceed as follows:—

Heat the new gear ring by suspending it from wire hooks in a container of clean engine oil which has been heated to 200°C. (392°F.) until the ring has attained the same temperature as the oil.

To eliminate the possibility of fire, keep the container covered by a metal lid to prevent flames from reaching the surface of the oil.

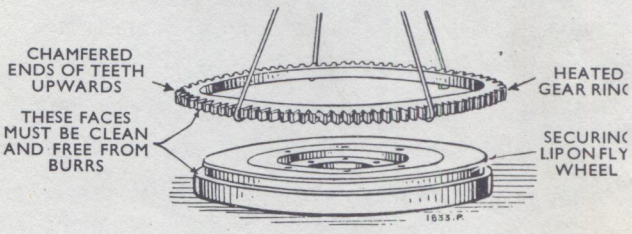

Fig. 58. *Fitting new ring gear in flywheel*

Do not allow starter ring (or thermometer) to rest on bottom of container or a false temperature reading may result.

Lift the heated ring from the oil by means of the wire hook and quickly wipe away surplus oil with a lintless rag.

Place the new ring in position on the flywheel with chamfered sides of teeth uppermost.

Make sure that the ring is completely over the securing lip and is square with the flange.

On cooling, the ring will contract and firmly grip the flywheel.

STARTER

To remove

Disconnect battery at negative terminal.

Disconnect starter cable by sliding the rubber boot off terminal and up the cable to reveal the terminal nut securing cable to starter terminal.

Remove terminal nut and cable.

Remove the two nuts, spring washers and bolts securing starter to clutch housing.

Withdraw starter forward.

To replace

This is a reversal of the removal procedure.

DISTRIBUTOR

To remove

Disconnect L.T. wire at its terminal on the distributor body.

Mark distributor clamp to distributor housing body as shown in Fig. 59. This is necessary when it is required to replace the same distributor without disturbing the ignition timing because the distributor clamp bolt holes are slightly elongated.

Remove two bolts holding distributor clamp plate to the distributor housing.

Remove distributor cap and lift out distributor.

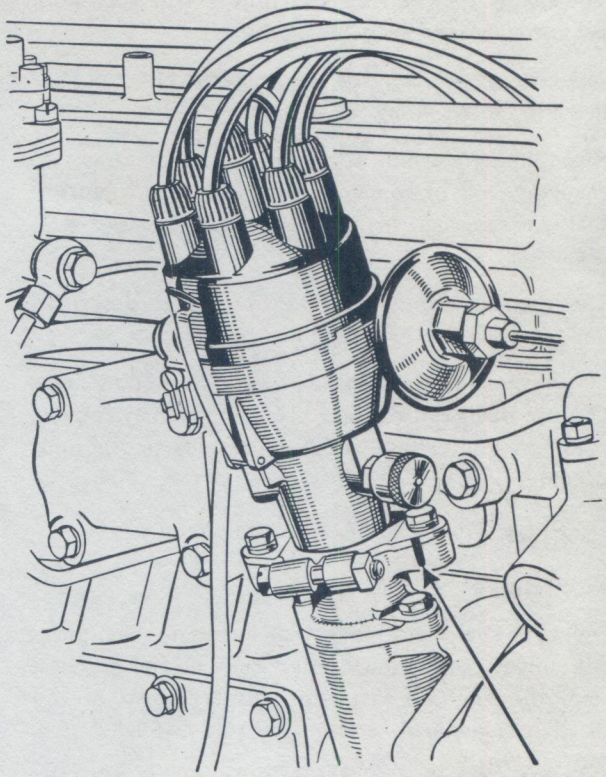

Fig. 59. *Method of marking distributor position before removal Series I and II distributor shown*

To refit

Insert distributor and rotate so that its offset driving dog engages the offset slot in the distributor driving spindle.

Replace the two fixing bolts and tighten these so that the marks made on the distributor clamp and body come opposite as shown in Fig. 59.

Reconnect L.T. wire to its terminal on the distributor body and replace distributor cap.

To fit replacement Distributor

When fitting a replacement distributor it is most important to ensure that the correct unit is used. Full particulars are given in the Data Section, under IGNITION, of the Distributor numbers and automatic advance data for each compression ratio.

The fitting of a wrong distributor will give poor performance and possibly pinking.

The correct position for the rotor at No. 1 T.D.C. firing is shown in Fig. 21.

After fitting, careful attention should be given to changing over or renewing the H.T. leads to ensure that the correct firing order of 1–5–3–6–2–4 is obtained.

The ignition timing should be set as described under IGNITION TIMING - to check.

Due to possible bedding down of the new contact breaker heel, the contact breaker gap may require readjusting after 300 to 500 miles (482 to 704 km.) running.

ENGINE

To remove

Owing to the overall length of the engine and gearbox unit it is advisable to first remove the gearbox from the engine. Procedure for removal of the gearbox is given in Section E of this manual.

It should be noted that the engine lifting eyes are only intended to take a vertical lift and a suitable spreader must be used between any lifting tackle attached to these eyes.

The recommended engine removal procedure is as follows:—

Disconnect and remove battery.

Drain radiator and cylinder block. Both taps are on the right-hand side (offside).

Remove top water hose and disconnect bottom water hose at the water pump end.

Remove the six bolts (three each side) holding radiator to the baffle plates and remove radiator.

Remove the eight bolts (four each side) holding engine mounting brackets to front cross-member.

Disconnect exhaust pipe at its connection to the twin branch junction from the twin exhaust manifolds.

Remove starter motor cable and two bolts securing starter to clutch housing. Withdraw starter.

If fitted, disconnect heater water feed pipe at water pump connection and remove pipe securing clips so that this pipe can be swung clear of the engine. Disconnect heater water return pipe at its connection on the heater unit operating valve.

Disconnect water temperature element lead at terminal on the thermostat housing.

Disconnect L.T. and H.T. leads on coil and remove ignition coil.

Disconnect fuel feed to fuel pump and oil pressure gauge pipe at end of flexible pipe on engine.

Remove engine tie rod.

Remove air silencer or air cleaner.

Disconnect carburettor choke control and throttle operating linkage at carburettor.

Disconnect vacuum feed pipe to brake servo cylinder at its connection to the inlet manifold.

Attach lifting gear to lifting eyes on engine using a spreader to ensure that a direct lift is taken by the lifting eyes.

Lift out engine.

To refit

This is a direct reversal of the removal procedure. Engine mounting rubbers, water joints and fan belt should be carefully examined and replaced if showing signs of hardness or cracking.

When replacing the engine tie rod, its front nuts should be adjusted so that the rubber washers are partly compressed and its rear nuts adjusted so that the rod is not in tension on compression.

REFILL ENGINE WITH SPECIFIED LUBRICANT.

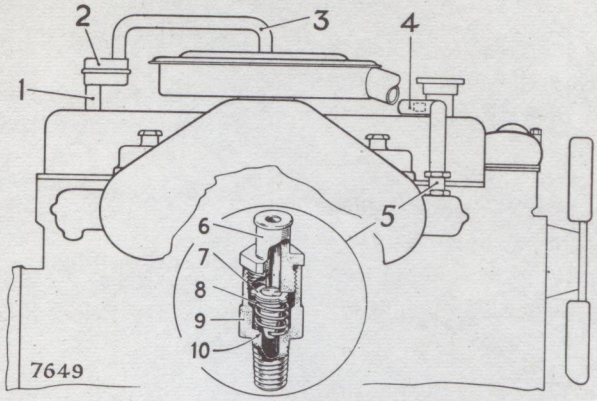

Fig. 60 *Closed crankcase ventilation system*

CLOSED CRANKCASE VENTILATION SYSTEM

This crankcase ventilation system is fitted to conform with regulations, that exist in certain areas, forbidding the discharge of crankcase fumes directly into the atmosphere.

Description (See Fig 60).

The system consists of hoses (1) (3) and (4), a flame trap (2) and ventilation regulator (5) the outlet end of which is screwed into either the front, or centre, of the inlet manifold.

Details of the regulator valve are shown in the illustration inset. It consists of an outlet connection (6) screwed into the main body (9) that houses the valve (7) and the valve opening spring (8).

The flame trap (2) was not fitted to the first arrangement of this system. This had an air intake with a gauze filter on the left-hand side of the engine crankcase.

Operation

When the engine is idling the inlet manifold depression is high enough to draw the regulator valve (7) onto its seat (10), and under this condition crankcase fumes pass directly into the "clean" side of the air cleaner through the pipe (1) flame trap (2) and pipe (3).

As the throttle opens the inlet manifold depression decreases and the spring (8) lifts the valve (7) from its seat. This allows the crankcase fumes, and air to be drawn from the engine valve rocker cover through the pipe (4) and for ventilation air to be drawn from the "clean" side of the air cleaner, into the crankcase through the pipe (3), flame trap (2) and pipe (1).

Servicing

This must be carried out at the recommended intervals given in the owner's handbook or more frequently where short journeys or slow speed driving are usual.

Neglect of servicing will cause sludge and water formation inside the engine which will increase engine wear.

Regulator valve cleaning

Dismantle and check the condition of the valve seat (10) and valve (7). If they are worn a new regulator valve assembly should be fitted.

The condition of the spring (8) is very important as it controls the opening and closing of the valve (7) against inlet manifold vacuum. If damaged or corroded it must be replaced.

When re-assembling the valve unit, make sure that the spring (8) is correctly located in the body (9) and that the valve (7) is not tilted across the body.

Regulator valve—testing

Refit the valve unit to the inlet manifold leaving the connecting hose off of the inlet end. Run the engine and check the valve operation by making the following tests.

1. Check that the engine idles correctly. When idling it should be possible to push the valve (7) hard against its seat; with a suitable rod, without affecting the slow running performance.

2. Check that the valve (7) opens when the engine speed is suddenly increased by opening the throttle from idling. Do not exceed 3,000 r.p.m. Valve movement can be seen by putting a short length of thin wire (approx. $1\frac{1}{2}$ in. (4 cms.) into the inlet end of the regulator. When the engine speed is suddenly increased the valve (7) should lift from its seat. This will be shown by the test wire lifting about 2-3 mm. Sudden closing of the throttle should allow the engine to idle correctly.

3. If the correct operation cannot be obtained a new spring (8) should be fitted. THESE SPRINGS MUST NOT BE STRETCHED OR FULLY COMPRESSED.

4. Remove wire used to indicate valve movement and connect rubber hose (4) to the valve inlet end after making sure that it is not obstructed by sludge.

Connection hoses

If necessary these should be removed and cleaned internally.

Flame trap—where fitted

The flame trap should be washed in kerosene (paraffin) and inverted so that it drains dry. THE FLAME TRAP MUST BE REFITTED IN THE POSITION SHOWN IN FIG. 60. Incorrect positioning of the flame trap will allow it to gradually fill up with oil and prevent the crankcase ventilation system from operating.

Air intake filter on crankcase—if fitted

This filter should be cleaned in the same way as the flame trap.

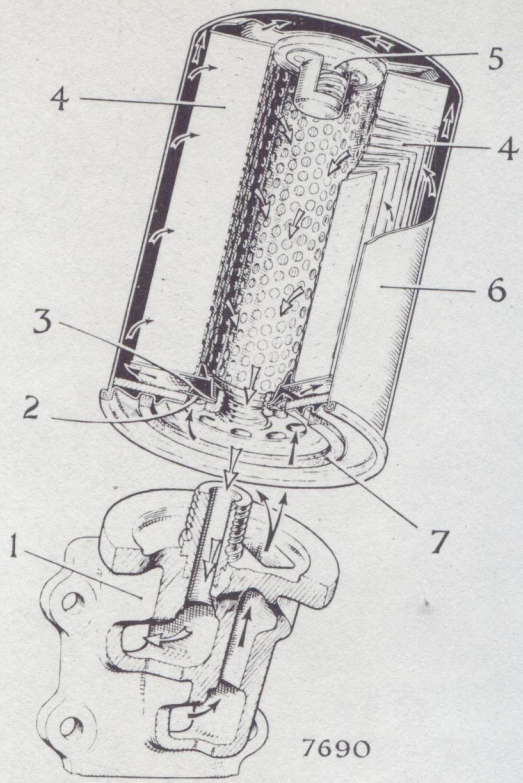

Fig. 61. *Oil filter—throw-away type*

FULL FLOW OIL FILTER—Throw-away type

(See Fig. 61)

The throw-away type full flow oil filter is screwed to an adaptor casting (1) that is bolted on the right-hand front lower side of the crankcase.

Oil from the engine pump enters the filter adaptor casting (1) as shown by the black arrows and passes through eight port holes into the filter body. All oil entering the filter passes through the filter cartridge from the outside to the centre as shown in Fig. 61 and thence passes through the screwed spigot into the adaptor casting as shown by the white arrows. From here it enters the engine main oil gallery.

The entry ports on the underside of the filter are shrouded by a flexible anti-drain valve (2) and (3) which prevents the filter from draining during standstill periods.

The throw-away filter unit must be changed at the recommended periods given in the Owner's Handbook.

By-pass Valve

A by-pass valve (5) is fitted inside the throw-away filter unit and forms part of this assembly as shown in the illustration.

If the filter element (4) becomes choked, through neglect to change the filter assembly at the servicing periods, the by-pass valve (5) opens and allows oil to pass directly to the engine bearings without being restricted by the blocked element (4).

Opening of the by-pass valve (5) can only occur when there is a pressure difference of over 7 lbs. per sq. in. (0·5 kg. sq. cm.) above and below the by-pass valve.

To remove

The rubber joint ring (7) on the filter base tends to stick to the adaptor casting (1) joint face, and if the filter cannot be removed by hand it can be unscrewed with a strap wrench.

To fit

Clean the joint face on the adaptor casting (1) and smear the joint ring (7) on the bottom of the filter with clean engine oil.

Screw the filter unit (6) into position until it just touches the joint face on the adaptor casting.

THEN SCREW THE FILTER A FURTHER TWO THIRD OF A TURN BY HAND ONLY.

Run engine and check for oil leaks.

Top up sump to the correct oil level to replace oil used to fill filter casing.

Note

If the filter unit is tightened beyond the recommended amount it will become very difficult to remove.

FUEL SYSTEM

CONTENTS

FUEL PUMP — Page

—Details of operation ... 3
—Glass bowl filter ... 4
—Hand primer ... 4
—Fuel shortage at carburettor ... 4
—Testing fuel pump when fitted to engine ... 4
—To remove fuel pump from engine ... 4
—To dismantle fuel pump ... 5
—Inspection of parts ... 5
—To reassemble fuel pump ... 5
—To test fuel pump after assembly ... 6
—Exploded view ... 7
—To refit pump to engine ... 8
—Excessive fuel pump pressure ... 8

CARBURETTOR—Stromberg DIV-42—(*Super Snipe Series I*) ... 9

—General description ... 9
—Carburettor operation ... 10
—Float chamber ... 10
—Starting from cold ... 10
—Slow running and cruising ... 11
—The economy system ... 11
—The accelerator pump ... 11
—Diagnosis of faults ... 12
—High petrol consumption ... 13
—Insufficient top speed ... 13
—Flat spot at small throttle opening ... 13
—Flat spot at half throttle ... 13
—Bad slow running ... 13

—Adjustments 13
—Normal idling and slow running adjustment 13
—Float level 13
—Fast idle throttle starting setting 14
—Dismantling for cleaning 14
—Inspection and cleaning 15
—Reassembly 15
—Exploded view 16
—Carburettor parts 17

CARBURETTOR—Zenith 42 WIA —(*Super Snipe Series II, III and IV*) 19

—General description 20
—Carburettor operation 20
—Float chamber 20
—Starting from cold 20
—Slow running 22
—Cruising (part throttle running) 22
—The by-pass jet 22
—The accelerator pump 24
—Diagnosis of faults 24
—Excessive fuel consumption 25
—Insufficient top speed 25
—Bad slow running 26
—Flat spot at small throttle openings 26
—Poor acceleration 26
—Difficult starting from cold 27
—Difficult starting when hot 27
—Adjustments 27
—Slow running 27
—Throttle, fast idle for starting 28
—Accelerator pump stroke 28
—Fuel level 28
—Dismantling for cleaning 29
—Inspection and cleaning 29
—Reassembly 29
—Exploded view 30
—List of parts 31
CARBURETTOR—Stromberg CD—Twin (*Series V onwards*) 35

AIR CLEANER AND SILENCER

—Servicing instructions—Oil bath type 18
—Dry element type 33
—Dry element type (*used with twin Stromberg CD carburettors*) ... 52

FUEL PUMP

The A.C. mechanically operated pump is mounted on the right-hand side of the engine and operated by an eccentric on the camshaft. A gauze filter and glass cover bowl are incorporated with the pump.

DETAILS OF OPERATION (see Fig. 1)

As the engine camshaft revolves an eccentric (7) actuates the fuel pump rocker arm (6) pivoted at (8) which pulls the pullrod (11) together with the diaphragm (13) downwards against spring pressure (12) thus creating a depression in the pump chamber (15). Fuel drawn from the tank enters the glass bowl from the pump intake (3). After passing through the filter gauze (17) and the inlet valve (1) it enters the pump chamber (15).

On the return stroke, pressure of the spring (12) pushes the diaphragm (13) upwards forcing fuel from the chamber (15) through the outlet valve (16) and outlet (14) to the carburettor. When the

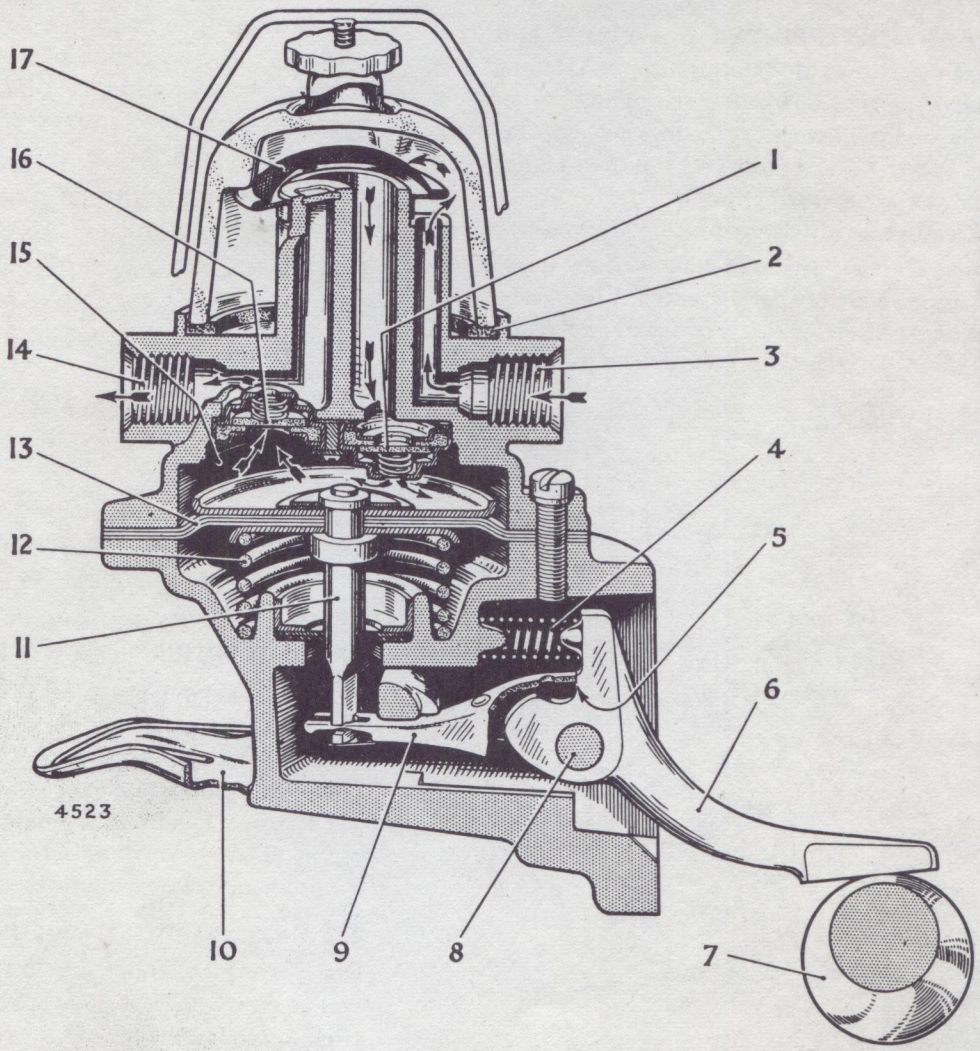

Fig. 1. *Sectional view of fuel pump and fuel filter*

carburettor bowl is full the float will shut the needle valve, thus preventing any flow of fuel from the pump chamber (15). This will hold the diaphragm (13) downwards against the spring (12) pressure and it will remain in this position until the carburettor requires further fuel and the needle valve opens.

The rocker arm (6) operates the connecting link (9) by making contact at (5) and this construction allows idling movement of the rocker arm when there is no movement of the fuel pump diaphragm.

The spring (4) keeps the rocker arm (6) in constant contact with the eccentric (7) to eliminate noise.

GLASS BOWL FILTER (see Figs. 1 and 2)

To gain access to the filter gauze for cleaning, first remove the glass bowl, after slackening the securing screw and swinging the fixing clip to one side. The washer (2) and filter (17) can then be removed from the main casting. Wash the filter in clean fuel, and replace it before fitting the washer.

When refitting see that the washer is in good condition and properly seated. Do not over-tighten the securing screw or the excessive pressure will cause rapid deterioration of the joint.

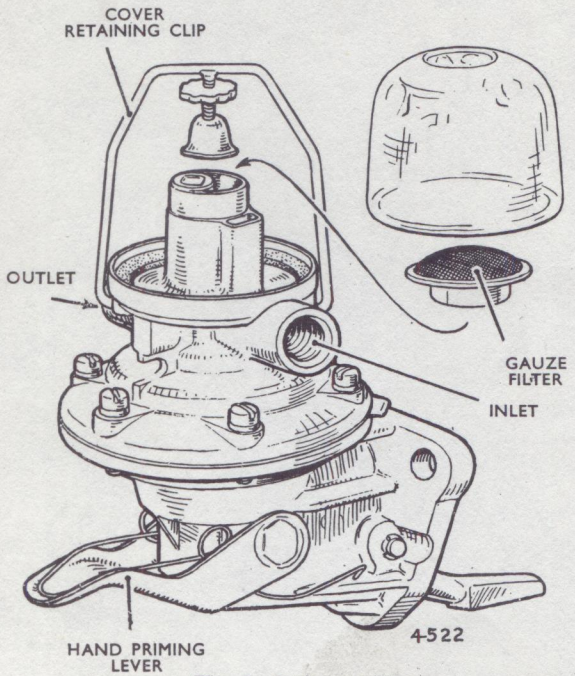

Fig. 2. *Fuel pump filter*

HAND PRIMER

The hand primer shown in Fig. 2 is for use when, for any reason, the carburettor float chamber or pump bowl has become empty. A few pulls upwards of the hand primer on these occasions will fill the float chamber with fuel and ensure easy starting without prolonged use of the starter and consequent excessive drain on the battery.

Owing to the special construction of the pump it is impossible to overfill the carburettor, as after several strokes with the hand primer this will become free, indicating that the carburettor is full.

Should it be found that the hand primer will not operate, turn the engine one revolution with the starting handle, thus freeing the fuel pump operating lever mechanism from the eccentric on the engine camshaft.

FUEL SHORTAGE AT CARBURETTOR

If the pump should fail to deliver fuel to the carburettor the following points should be checked:—

1. That fuel is available in the tank and that the unions in the pipe connecting the tank to the pump are tight.
2. That the pump filter is clean and that the washer below the filter cover is in good condition.
3. The action of the pump, proved by revolving the engine with the starter with the delivery pipe (pump to carburettor) disconnected.

TESTING FUEL PUMP WHEN FITTED TO ENGINE

With the engine switched off, the pipe to the carburettor should be disconnected at the carburettor end, leaving a free outlet from the pump. The engine can then be turned over by hand or by the starter. There should be a well-defined spurt of fuel at every working stroke of the pump, that is once every two revolutions of the engine.

TO REMOVE FUEL PUMP FROM ENGINE

Firstly, the pipe unions should be disconnected, the two nuts fixing the fuel pump to the engine crankcase should then be unscrewed, after which the fuel pump will come away readily.

TO DISMANTLE FUEL PUMP (see Fig. 4)

Before commencing to dismantle the pump, thoroughly clean the exterior and make a mark across the two flanges of the pump housing, as a guide when reassembling.

Remove the six securing setscrews and separate the two halves of the main casting.

Turn the diaphragm and pull-rod assembly through an angle of 90°, when it may be disconnected from its securing slot in the connecting link and withdrawn. Remove diaphragm spring.

Do not attempt to separate the four diaphragm layers.

Remove one circlip from the rocker arm pin and withdraw the pin.

The rocker arm, together with the connecting link spring and washers may now be removed.

Withdraw the valve retainer screws from inside the upper casting and remove the retainer plate, valve assemblies, and valve retainer gasket.

INSPECTION OF PARTS

Thoroughly clean all parts in paraffin. Those parts that comprise the valve assemblies and retainers should be washed separately from the other dirtier components.

The diaphragm and pull rod assembly should be renewed if there is any sign of hardening or cracking.

Where any part of the hand priming mechanism is broken the complete set of parts must be renewed, the outer ends of the spindle being riveted over by hand tools after correctly locating the various components.

All badly worn parts must be renewed and very little wear may be tolerated on the rocker arm pin, holes and engagement slot in link, holes in rocker arm, contact face of rocker arm or pull rod.

The valve assemblies cannot be dismantled but should be tested for air-tight seatings by suction, and renewed where necessary.

Check the valve retaining joint very carefully for damage or distortion; it is advisable to renew this gasket after dismantling as any fault preventing correct seating of the valve assembly will greatly decrease the efficiency of the pump.

Test the diaphragm spring, although this seldom requires replacement. Where necessary ensure that the replacement spring has the same identification colour and consequently the same strength as the original.

All gaskets and joints should be renewed as a matter of routine, including the fabric oil seal washers located round the diaphragm pull-rod.

TO REASSEMBLE FUEL PUMP

Refit valve retainer gasket, valves, valve retainer, and secure in position with two retaining screws.

The valves must be assembled in the pump as illustrated in Fig. 1. If fitted in any other way the pump will not operate.

Assemble link, packing washers, rocker arm and rocker arm spring in the body.

Insert rocker arm pin through the hole in the body, at the same time engaging the packing washers, link, and the rocker arm, then spring the retaining clips into the grooves on each end of the pin.

The rocker arm pin should be a tap fit in the body, and if, due to wear, it has more play than this, the ends of the holes in the body may be burred over slightly.

The fitting of the rocker arm pin can be simplified by first inserting a piece of 0·240" (6 mm.) diameter rod through the pin hole in one side of the body far enough to engage the rocker arm washers and link, and then pushing the rocker arm pin in from the opposite side, removing the temporary rod as the pin takes up its proper position.

Place the diaphragm spring in position in the pump body. Place the diaphragm assembly over the spring (the pump rod being downwards) and centre the upper end of the spring in the lower protector washer.

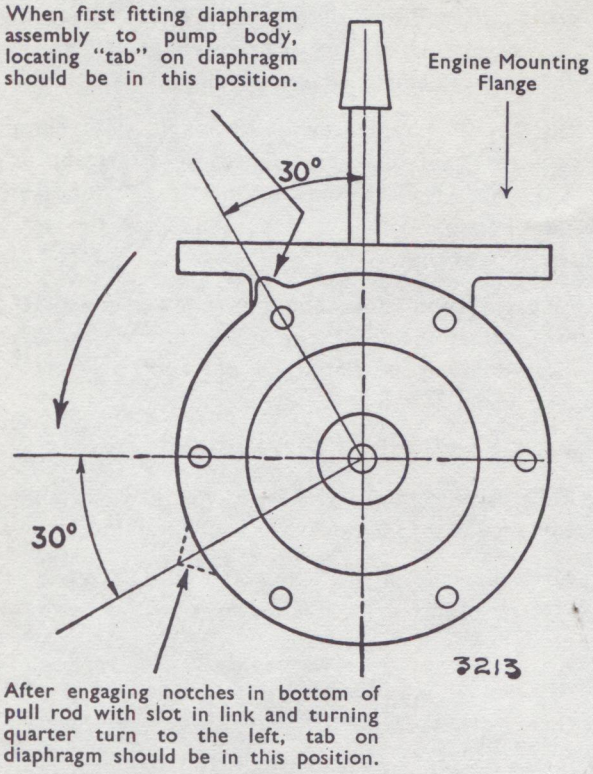

Fig. 3. *Fitting diaphragm assembly*

Press downwards on the diaphragm, at the same time turning the assembly to the left in such a manner that the slots on the pull rod will engage the fork in the link, ultimately turning the assembly a complete quarter turn to the left, which will place the pull rod in the proper working position in the link, and at the same time permit the alignment of the holes in the diaphragm with those in the pump body flanges. When first inserting the diaphragm assembly into the pump body, the locating "tab" on the outside of the diaphragm should be at the position shown in Fig. 3. After turning the diaphragm assembly a quarter turn to the left the "tab" should be in the position indicated by the dotted outline.

The sub-assemblies of the pump are now ready for fitting together, and this is carried out as follows:—

Push the rocker arm towards the pump until the diaphragm is level with the body flanges.

Place the upper half of the pump into the proper position, as shown by the mark made on the flanges before dismantling.

Install the cover screws and spring washers and tighten until the heads of the screws just engage the washers.

Important

Before finally tightening screws, push rocker arm towards pump using about a 4″ length of tube slipped over the end of the rocker arm so as to hold the diaphragm at the bottom of its stroke. Hold in this position and tighten screws alternately. After assembly the edges of the diaphragm should be about flush with the two clamping flanges.

Any appreciable protrusion of the diaphragm indicates incorrect fitting, in which case special care should be paid to maintaining inward pressure on the rocker arm while the diaphragm screws are finally tightened alternately and securely.

Refit filter gauze and cork seating gasket in position.

Refit filter bowl as previously described.

TO TEST FUEL PUMP AFTER ASSEMBLY

The best method is by using an AC-Sphinx bench test stand, on which the suction side of the pump is piped to a tin of paraffin (kerosene) at floor level and the outlet side of the pump connected to a stop tap and pressure gauge.

First, flush the pump through to wet the valves and seats, and then completely empty it again by continuing to operate the rocker arm by hand with the suction pipe clear of the paraffin (kerosene). Again operate pump. Not more than 16 strokes should be necessary to secure delivery of paraffin from the pump outlet.

With the same apparatus a second test can be made by working the pump with the tap on the delivery side closed, pressure then being recorded on the gauge. After ceasing to work the pump it should take several seconds for this pressure to return to zero, thus denoting that the valves are seating

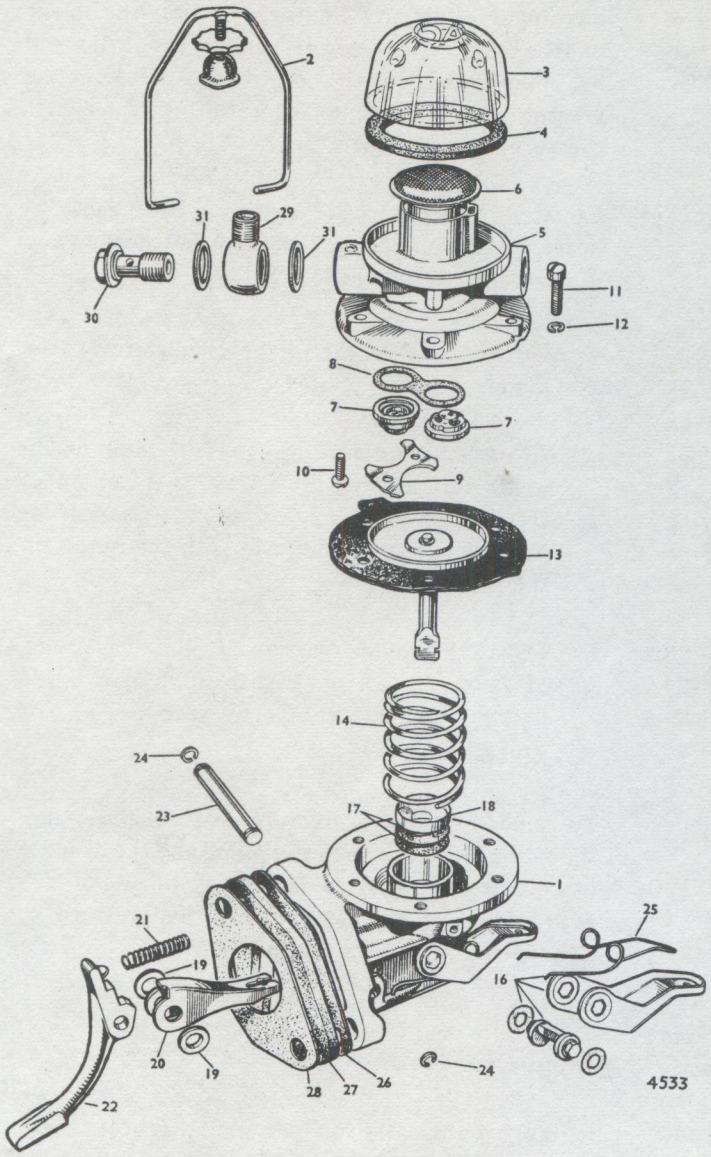

Fig. 4. *Exploded view of fuel pump*

1. Body.
2. Retainer—glass cover.
3. Glass bowl.
4. Gasket—bowl.
5. Cover.
6. Filter gauze.
7. Valves.
8. Gasket—valve.
9. Retaining plate—valve.
10. Screw—valve retainer.
11. Screw No. 10 U.N.F.
12. Washer $\frac{3}{16}$" spring.
13. Pull rod and diaphragm.
14. Spring—diaphragm.
16. Priming lever.
17. Washer—oil seal.
18. Retainer—oil seal.
19. Washer—rocker pin.
20. Link.
21. Return spring rocker arm.
22. Rocker arm.
23. Pin—rocker arm.
24. Circlip—rocker arm pin.
25. Priming lever return spring.
26. Joint, pump to insulator.
27. Heat insulator.
28. Joint—insulator to cylinder block.
29. Outlet union.
30. Banjo bolt.
31. Fibre washer.

properly. Also, while there is pressure, the outer edge of the diaphragm—visible between the two clamping flanges—should be carefully examined for leakage, and the retaining screws tightened if necessary. When working the pump by hand a somewhat longer stroke is obtained and the pressure developed is apt to be higher than when fitted to the engine.

When the above apparatus is not available the pumps should be tested, using a pan of clean paraffin as follows:—

Flush the pump by immersing it in the paraffin and working the rocker arm half a dozen times, then empty the pump by continuing to operate it while held above the bath. Then with the pump clear of the paraffin bath, place the finger over the inlet union (marked "in") and work the rocker arm several times. Upon removing the finger a distinct suction noise should be heard, denoting that the pump has developed a reasonable degree of suction. Afterwards the finger should be placed over the outlet union and after pressing the rocker arm inwards the air drawn into the pump chamber should be held under compression for two or three seconds; this should be done with the pump immersed in paraffin and the clamping flanges of the diaphragm watched for any signs of air leakage.

TO REFIT PUMP TO ENGINE

Reverse the procedure outlined for removal from engine. Ensure that the rocker arm is correctly positioned. After refitting to the engine, the pump should be run for a short time and pipe unions and pump examined for any signs of fuel leakage.

EXCESSIVE FUEL PUMP PRESSURE

As explained under the operation of the pump, the pressure of fuel on the carburettor is determined by the spring (12, Fig. 1), and the further this spring is compressed the greater will be the pressure. All parts of the pump and the cylinder block are machined to definite limits, and if all the lower limits exist on one particular engine, the spring will be compressed on the downward stroke to a greater extent than is normal, resulting in an excess pressure at the carburettor.

Excessive fuel pump pressure can be a cause of heavy fuel consumption. This can be checked and if necessary rectified as follows:—

Disconnect the pipe to the carburettor at the pump.

A suitable pressure gauge calibrated up to 6 lb. per sq. in. (0·422 kg. per sq. cm.) should then be fastened to and as near as possible, on the same level with the outlet on the pump.

Rotate the engine on the starter, and a reading of $2\frac{1}{2}$ to $3\frac{1}{2}$ lbs. per sq. in. (0·176 to 0·246 kgs. per sq. cm.) should be recorded on the gauge.

To remedy excessive pressure, additional packings should be fitted between the pump and the cylinder block. As a general guide, it may be stated that each additional packing reduces the pressure by $\frac{1}{2}$ lb. per sq. in. (0·035 kgs. per sq. cm.).

Important Note

It must be clearly understood that the actua mounting on the engine affects the output pressure of the pump and thus these tests cannot be carriec out unless the pump is mounted in its norma position. The use of jigs or other fixtures foi testing A.C. pumps will not necessarily give the same results.

CARBURETTOR—STROMBERG DIV-42

(Super Snipe Series I)

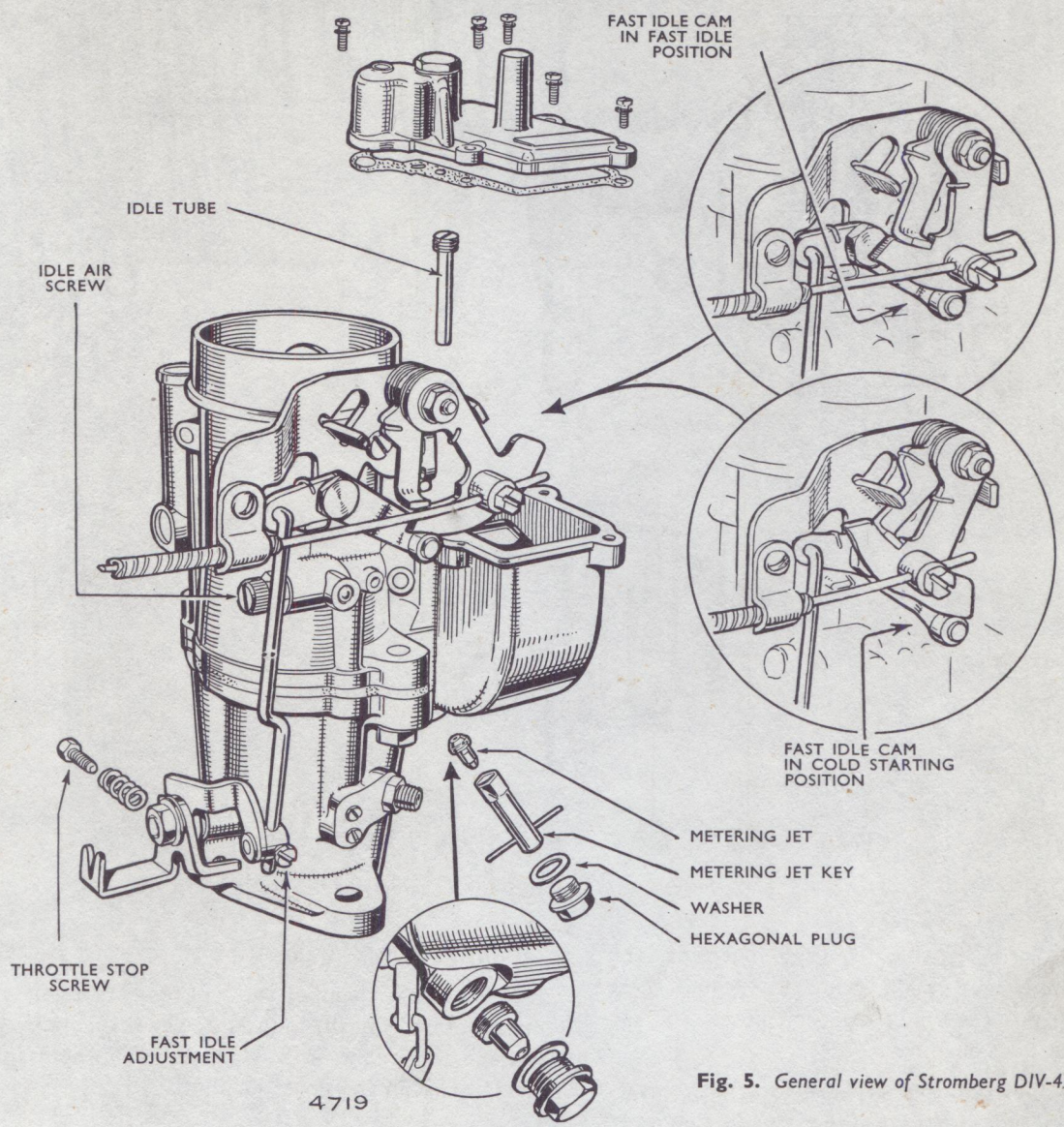

Fig. 5. *General view of Stromberg DIV-42 carburettor*

GENERAL DESCRIPTION

This carburettor is fitted to Super Snipe Series I engines and has many features in common with other Stromberg carburettors used on engines produced by the Rootes Group.

It is a downdraught unit equipped with double venturi, accelerator pump, and vacuum-operated economiser system. The choke control, used when starting from cold, is manually operated and interconnected to the throttle to give correct starting conditions.

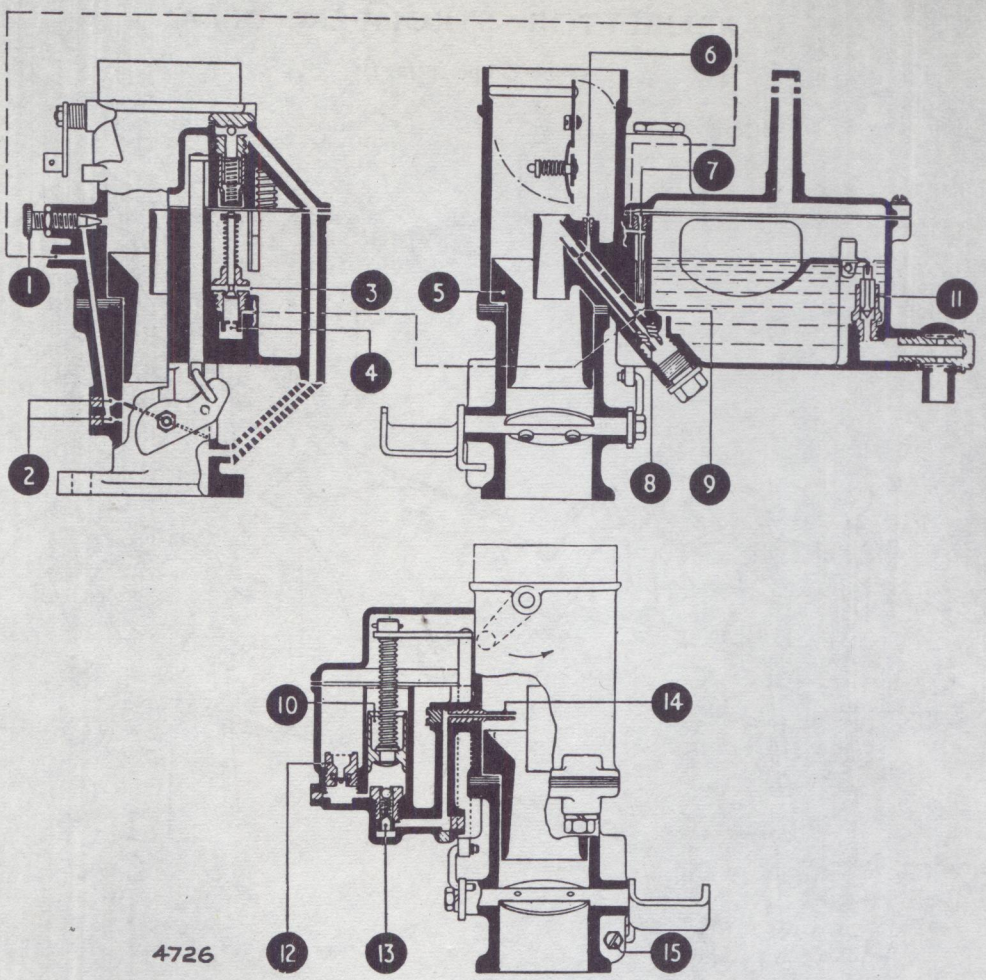

Fig. 6. *Sectional view of Stromberg DIV-42 carburettor*

A heat-insulating gasket is used between the throttle body and main body to reduce heat transfer from the induction manifold to the carburettor float chamber.

A general view of this carburettor, with insets showing different positions of the fast-idle cam lever when the choke control is used, is shown in Fig. 5.

OPERATION OF THE CARBURETTOR

Float Chamber (see Fig. 6)

The flow of the fuel into the float chamber is governed by a needle valve (11) which is closed by the float when a predetermined level is reached.

From the float chamber the fuel flows through the main metering jet (8) and so into the main discharge jet, and idle tube (7) in which it attains the same level as that in the float chamber.

Starting from cold

When starting under cold conditions, the choke (strangler) control is pulled out as far as possible, the ignition switched on and the starter operated.

After the engine starts and when it begins to run erratically (or "hunt"), the choke control should

be pushed in far enough to make it run smoothly again. The choke control should be pushed in fully as soon as is possible without causing the engine to misfire or stop, but it should be noted that when the choke control is pushed to within about half an inch (12 mm.) of the instrument panel, the mixture is reduced to normal strength.

This is a very important point, as it means that for its last half inch of travel the choke control may be used as a hand throttle. Thus it is possible to increase the idling speed of the engine before it reaches its normal working temperature, which will prevent stalling.

Cold starting conditions require a very rich fuel/air mixture for a few seconds, and a weaker but not normal mixture until the induction manifold begins to warm up. Correct throttle opening is also important.

These requirements are met by the strangler butterfly valve closing off the air supply, and the strangler valve operating mechanism opening the throttle to the correct starting position, when the choke control is pulled out to start the engine.

Fig. 5 illustrates this mechanism and the fast idle cam which can open the throttle butterfly valve to fast idling or starting position. Cam positions for fast idling and starting are shown in Fig. 5 (insets).

In the main illustration the cam is in normal idling position when it allows the throttle butterfly to operate against the slow running speed adjustment screw.

The choke (strangler) butterfly valve has unequal areas each side of its pivot spindle, and the valve can open against a light spring, even when the choke control is pulled out.

When the engine starts, with the choke valve closed, air pressure acts on the larger pivoted area of the choke butterfly valve, opening it a small amount against its light control spring, and the lower pressure in the carburettor intake.

This allows entry of sufficient air to prevent over-choking of the engine when starting from cold.

Slow Running and Cruising (see Fig. 6)

The fuel for a slow running jet is primarily fed through the main discharge jet, which in turn supplies the idle tube (7) through the holes in the bottom of the main discharge jet. The orifice at the base of the idle tube meters the fuel for slow running. Air entering through the air bleed orifice in the top of the idle tube partly emulsifies the fuel, and after leaving the tube it is further emulsified by air entering at the slow running air adjustment (1). The mixture proceeds through the channel down the barrel of the carburettor to the idle discharge hole (2) on the engine side of the throttle. When the throttle is opened slightly, a progressive action is ensured by the second upper discharge hole (2) known as the "Progression Hole" being uncovered and supplying further mixture.

As the throttle is opened still further, the main carburettor comes into action when suction at the small venturi draws fuel and air mixture from the main discharge jet. The main metering jet (8) supplying the main discharge jet is calibrated to meter the fuel supply for economical running at cruising speeds.

When the fuel level in the main discharge jet falls, a series of holes, which are in communication with the atmosphere through the high speed bleed (6) are uncovered. The fuel issuing from the main discharge jet is consequently partly atomised by air entering these holes, and is completely broken up when entering the small venturi. It then passes through the large venturi (5) to the induction system. This condition persists at all normal driving speeds at part throttle.

The Economy System (see Fig. 6)

The main metering jet supplies the minimum amount of fuel necessary for normal cruising speed at part throttle. For maximum power at all speeds some enrichment is required, and this is obtained by bringing the by-pass or power jet (4) into operation. The by-pass valve is opened by the engine suction through an interconnecting passage way in the carburettor body to the manifold side of the throttle butterfly valve.

The opening and closing of the by-pass valve is controlled by the by-pass vacuum piston which is situated in a cylinder incorporated in the float chamber cover. At all light load running and cruising speeds the suction existing in the induction manifold draws the piston upwards against the pressure of its return spring, so that the by-pass valve remains closed. When full throttle is approached, the engine suction becomes insufficient to hold the piston upwards against its return spring pressure. The piston then moves downwards, overcoming the pressure of the weaker by-pass valve spring and forcing the by-pass valve off its seat, so allowing extra fuel to pass through the by-pass jet (4) into the main discharge jet.

The piston spring is painted black for identification and only a black spring can be used when fitting a replacement.

The Accelerator Pump (see Fig. 6)

An accelerator pump is incorporated in the carburettor to ensure instant response, when the throttle is suddenly opened, by ejecting a small quantity of metered fuel into the air stream.

The accelerator pump piston rod is linked with the throttle lever so that the accelerator pump piston is drawn up when the throttle is closed and the pump cylinder is charged with fuel drawn from the float chamber through the non-return suction valve (12). The only outlet for this fuel is through the pump discharge valve (13) and along the channel to the pump jet (14) through which it is ejected into the air stream. This action is prolonged, since the pump piston will lag behind the pump piston rod compressing the follow-up spring and ensuring that the pump jet is supplied over a given period of time.

The accelerator pump stroke can be decreased by moving the connecting link from the outer to the inner hole. This gives a smaller fuel discharge when the accelerator pump comes into operation.

The link should normally be connected to the position given under "CARBURETTOR SETTINGS" in the Data Section.

GENERAL DIAGNOSIS OF FAULTS

Since the function of the carburettor is closely connected with other items of engine operation, troubles are sometimes difficult to trace and the carburettor is often blamed when it is not at fault.

When performance has previously been good any troubles can be quickly located by following an orderly system of investigation covering the various items.

Unless known to be in perfect condition, the following items should be checked before making carburettor adjustments.

Ignition System

1. Check spark plug condition. Clean and set gaps.
2. Check condition and setting of contact breaker points, also check contact breaker spring tension.
3. Ensure that the automatic advance mechanism is working.
4. Check ignition timing. Only small variations from the correct static timing are permissible.

Fuel System

1. Ensure that an adequate fuel supply is being delivered to float chamber.
2. Examine induction manifold and carburettor flange for air leaks.
3. See that air cleaner is fitted correctly and not restricting air supply to carburettor.
4. Check fuel pump output pressure. The correct figures are given in the Data Section under "FUEL PUMP"

Compression

1. Check valve clearances and compressions.
2. Make sure valves are not sticking.

Exhaust System

1. Check that exhaust pipe has not become damaged or blocked.

If the carburettor has been proved faulty, a systematic check should be carried out in order to locate the exact source of the trouble.

Random adjustments on the carburettor are useless and harmful and must never be attempted.

High Petrol Consumption

(*a*) Check that the main metering jet size is as specified.

(*b*) Check that the float level is correct. (See "Float Level", on this page.)

(*c*) Check that the by-pass valve is not sticking or leaking and passing petrol at low throttle opening. The valve assembly must be removed and any foreign matter removed by blowing through the valve orifices.

(*d*) Check by-pass valve operating piston, in float chamber cover, for freedom of operation.

(e) Remove the accelerator pump discharge valve and check the ball seating by blowing through it. Incorrect seating allows petrol to pass continuously.

Insufficient Top Speed

(*a*) Check that the fuel supply to the float chamber is adequate. Fuel pump output pressure should be checked.

(*b*) See that the throttle valve is opening fully.

(*c*) Check by-pass valve operating piston, in float chamber cover, for freedom of operation.

(*d*) See that the by-pass jet is clear and of the specified size as stamped on the hexagon of the body. In order to do this the by-pass valve must be removed from the float chamber, but no attempt must be made to remove the jet orifice cup from the valve body.

Flat Spot at Small Throttle Opening

(*a*) Adjust the idling speed to give smooth running, just off rich or "hunting" condition.

(*b*) If the flat spot is still evident check that the idle and progression holes are clear.

(*c*) Check that the idle tube is clear.

(*d*) Check the accelerating pump for any stoppage or sluggishness.

Flat Spot at Half Throttle

(*a*) Check that the main metering jet is clear, and of correct specified size.

(*b*) Check that the accelerating pump is ejecting fuel from the pump jet and that its operating link is connected to the position given in the Data Section under "Carburettor Settings".

Bad Slow Running

(*a*) Check that the idle tube is clear.

(*b*) Blow through entire slow running system after idle tube with clean compressed air.

(*c*) Ensure that the joint between the float chamber top and float chamber is making an airtight seal around the idle tube.

ADJUSTMENTS

Normal Idling or Slow Running Adjustment

This adjustment should be made when the engine is hot, and set so that the engine is only just off rich ("hunting") condition.

1. Adjust the throttle stop screw to control speed.
2. Adjust the idling air screw to give the most even running. This screw controls the air supply needed to obtain the correct slow running mixture.
3. Ensure that the engine does not stop when the clutch pedal is fully depressed.

Float Level (see Fig. 7)

As the float needle operates against fuel pump pressure it is necessary to check the petrol level in the float chamber while the engine is idling. The car must be on level ground.

1. Remove the float chamber cover and run the engine at a fast idle speed.
2. Check the petrol level from the top face of the float chamber, using a depth gauge. The correct level is 19 mm. from the float chamber top face. The best position for the depth gauge is above the pump feed valve.
3. If necessary, remove float pivot and float. Adjust the level by carefully bending the float arm using two pairs of pliers. Bending the float upwards raises the level and vice-versa.

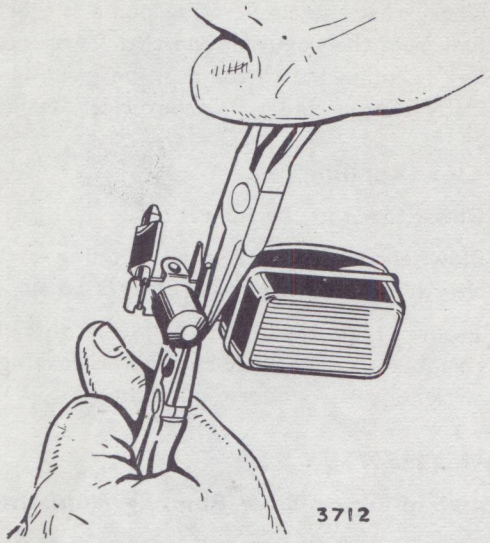

Fig. 7. *Adjusting float to correct petrol level in float chamber*

Fast Idle Throttle Starting Setting (see Fig. 8)

To make this adjustment remove the carburettor and slacken the set screw on the fast idle rod connection at the throttle end. Insert a drill or length of wire, having a diameter similar to the dimension given against "Fast Idle Gap" in the Data Section under "Carburettor Settings", between the throttle valve and the body as illustrated in Fig. 8. Hold the strangler in its fully closed position and tighten the adjustment set screw. Again fully close the strangler and recheck throttle butterfly opening.

TOOLS

Most of the operations on the carburettor can be performed with common workshop tools — spanners, screwdrivers, etc.

Keys for removal of the metering jet and for removal of the by-pass jet, etc., are obtainable from the makers of the carburettor:—

The Zenith Carburettor Co. Ltd.,
Honeypot Lane,
Stanmore,
Middlesex, England.

Part Nos.

Metering jet key	...	L.638
By-pass jet key	...	L.1424/629

DISMANTLING FOR CLEANING

(See Figs. 9 and 10)

Before a carburettor is dismantled it should be thoroughly cleaned externally.

1. Remove five set screws securing float chamber cover taking care not to damage the gasket.
2. Unscrew float pivot pin with screwdriver and remove float and needle valve.
3. Unscrew and remove float needle valve seating with a box spanner.
4. Remove accelerator pump.
5. Unscrew and remove by-pass valve.
6. Unscrew and remove pump feed valve.
7. Unscrew the pump discharge ball valve.
8. Unscrew the pump jet plug with a screwdriver.
9. Unscrew and remove the pump jet with a screwdriver.

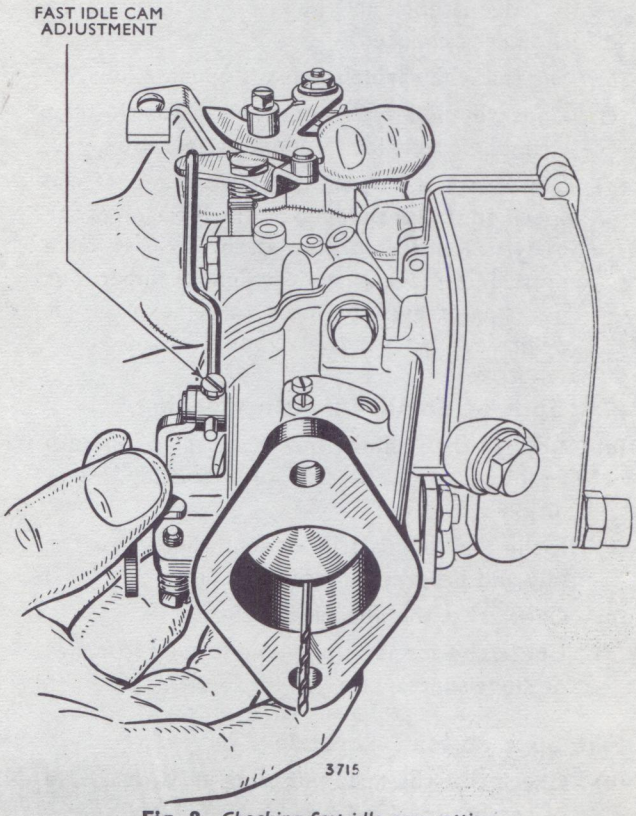

Fig. 8. *Checking fast idle cam setting*

10. Unscrew and remove idle tube using a screwdriver.
11. Unscrew and remove main jet plug with a $\frac{5}{16}$" ring spanner. Note joint washer.
12. Unscrew and withdraw metering jet.
13. Removal of the main discharge jet is rarely necessary and should only be undertaken if the jet has been damaged or serious blockage is suspected. It may be extracted by screwing in a small taper screw thread tap and pulling on the end of the tap.
14. Unscrew and remove the high speed bleed. Loosen with a screwdriver and remove with a piece of pointed wood.
15. Unscrew the idle discharge and progression hole plugs with a screwdriver.

INSPECTION AND CLEANING

It is most important that all jet sizes and settings agree with those specified in the Data Section.

All parts should be washed in clean petrol and passage ways blown through with clean compressed air.

It must be ensured that all jets are clean and that orifices are undamaged.

When cleaning, do not pass wire or any similar hard material through the jet orifices. These orifices are carefully calibrated and the slightest alteration of shape will affect the flow through them.

If a change of jet size is necessary, obtain a new jet from the makers but do not attempt to ream or otherwise tamper with the old one.

Inspect all valve seats and ensure that they are perfectly clean and free from foreign matter.

Reassembly

Reassembly is the reverse of the dismantling procedure. Note that the main discharge jet must be replaced with the groove positioned to line up with the positioning peg.

An exploded view of the carburettor is shown in Fig. 10.

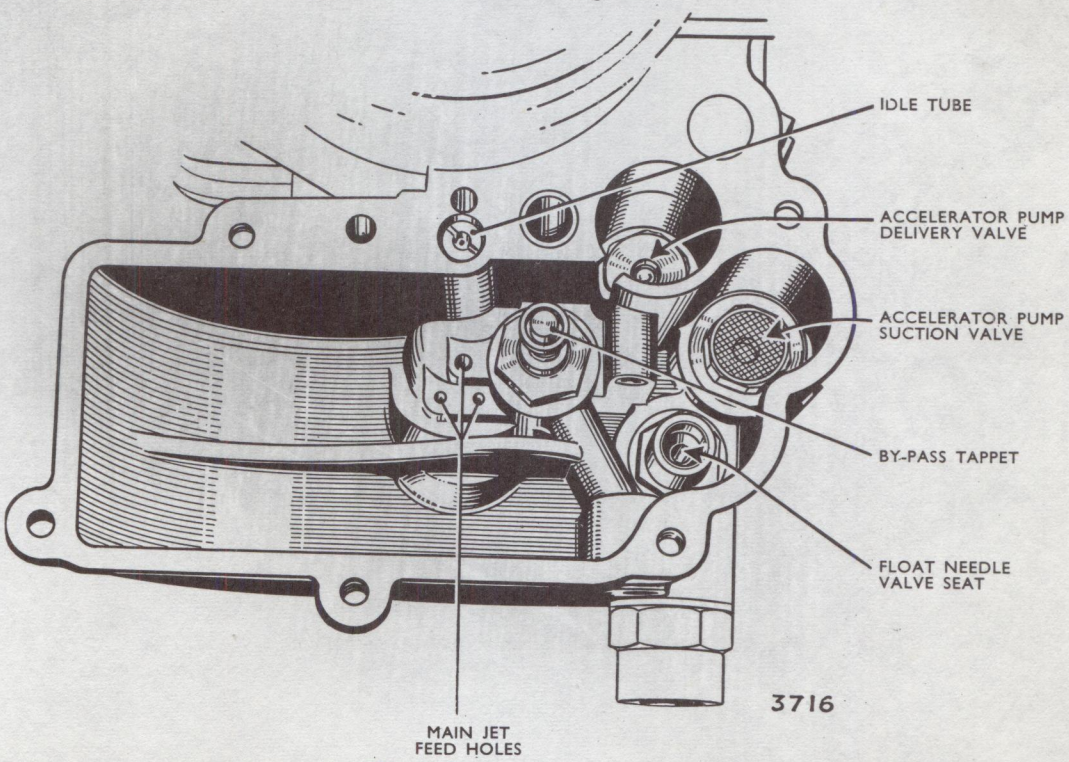

Fig. 9. *Components in float chamber*

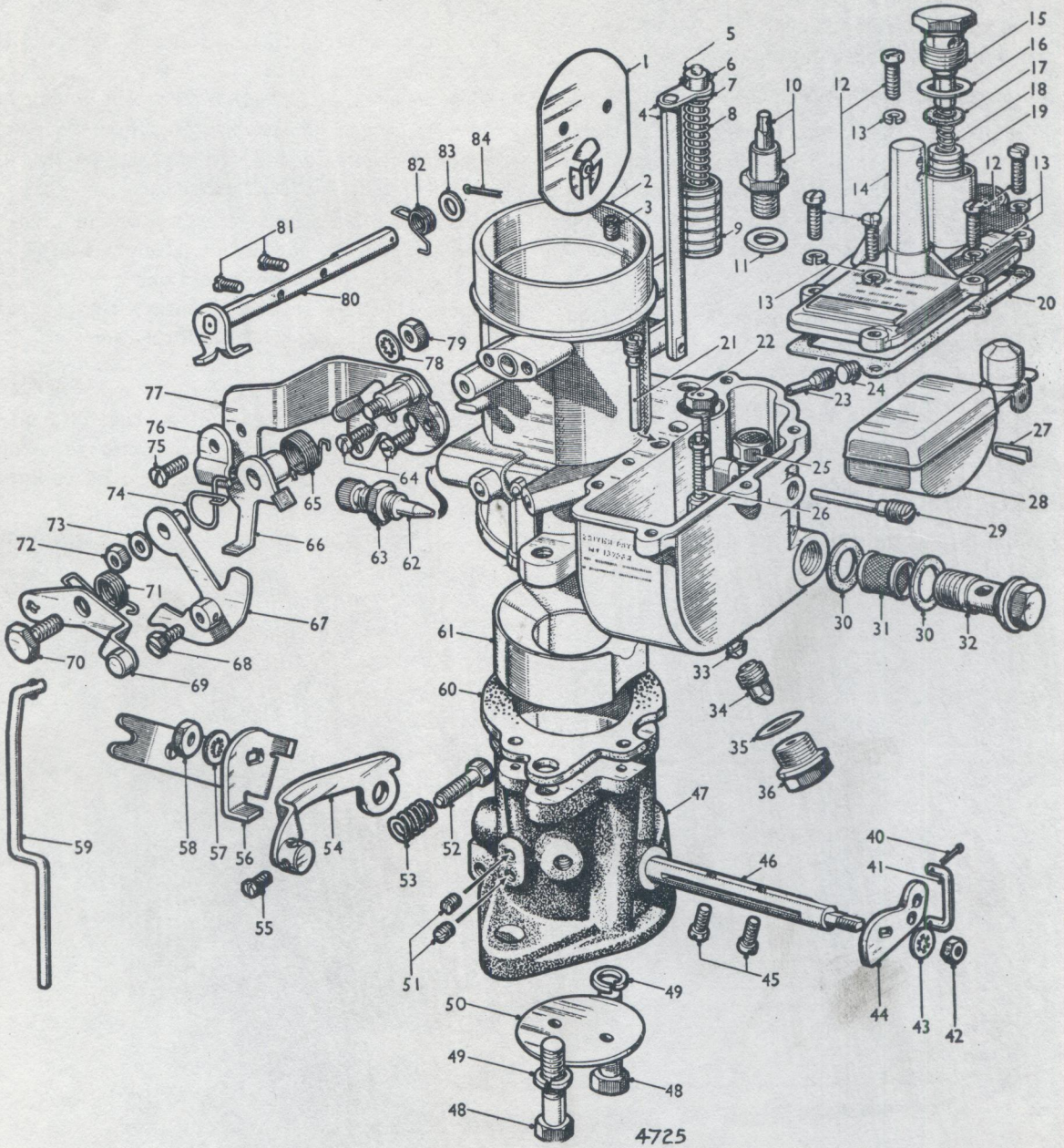

Fig. 10. *Exploded view of Stromberg DIV-42 carburettor*

CARBURETTOR PARTS (see Fig. 10)

1. Air horn valve.
2. Main body.
3. High speed bleed.
4. Pump rod.
5. Nut for piston rod.
6. Split pin.
7. Washer for pump spring.
8. Spring for pump piston.
9. Pump piston.
10. Needle valve and seating assembly.
11. Washer for needle valve and seating assembly.
12. Screw fixing float chamber cover (5 off).
13. Spring washer for screw fixing float chamber cover (5 off).
14. Float chamber cover.
15. Plug over piston.
16. Washer for plug over piston.
17. Washer.
18. Spring for economy piston.
19. Economy piston.
20. Gasket for float chamber cover.
21. Idle tube.
22. Pump discharge valve.
23. Pump discharge jet.
24. Plug over pump discharge jet.
25. Pump check valve.
26. By-pass valve.
27. Clip for needle.
28. Float.
29. Float fulcrum screw.
30. Fibre washer (2 off).
31. Filter gauze.
32. Plug for filter elbow.
33. Main discharge jet.
34. Metering jet.
35. Washer for metering jet plug.
36. Plug under metering jet.
40. Split pin for pump link.
41. Pump link.
42. Nut for pump lever.
43. Shakeproof washer.
44. Pump lever.
45. Screw for throttle (2 off).
46. Throttle stem.
47. Throttle valve body.
48. Bolt fixing throttle body to main body (2 off).
49. Spring washer for bolt fixing throttle body to main body (2 off).
50. Throttle.
51. Plug over idle discharge holes (2 off).
52. Throttle stop screw.
53. Spring for throttle stop screw. Washer (2 off) (not shown).
54. Floating lever.
55. Screw for swivel.
56. Throttle lever.
57. Shakeproof washer.
58. Nut for throttle lever.
59. Fast idle rod.
60. Throttle-body to main-body gasket.
61. Venturi.
62. Idle needle valve.
63. Locknut for idle needle valve.
64. Screw fixing tube holder (2 off).
65. Spring for choke control lever.
66. Stop for choke control lever.
67. Cam lever.
68. Screw for swivel.
69. Cam follower.
70. Fulcrum screw for cam follower.
71. Spring for cam follower.
72. Nut.
73. Washer.
74. Spring for cam lever.
75. Screw for choke control clip.
76. Choke control clip.
77. Tube holder.
78. Shakeproof washer.
79. Nut.
80. Air horn stem.
81. Screw fixing air horn valve (2 off).
82. Spring for air horn stem.
83. Washer.
84. Split pin.

AIR CLEANER—Oil bath type

To remove, clean and re-oil (see Figs. 11 and 12)

1. Remove wing nut (1) and lift off top cover (2) placing it clear of the air cleaner by bending the flexible air intake hose.
2. Release the three clips (6) and lift out the cleaner element (3).
3. Lift out the oil container (5), drain off the oil, clean container and refill with clean engine oil to the level mark stamped on the side of the container.
4. If required clean out the outer container (7).
5. The filter gauze (3) does not normally need cleaning, but if it appears to be dirty on its underside it should be cleaned by rinsing in clean paraffin (kerosene) after which it should be blown through with compressed air, or allowed to drain dry.
6. Ensure that the joint ring (4) is in position as shown in Fig. 11.
7. Place the cleaner element (3) in the oil container (5) and, holding them level as illustrated in Fig. 12, to prevent oil from being spilt from the container (5), replace the top cover (2) and wing nut (1).
8. Replace this assembly in the outer container (7), fix in position by replacing the three clips (6) and finally recheck tightness of the wing nut (1).

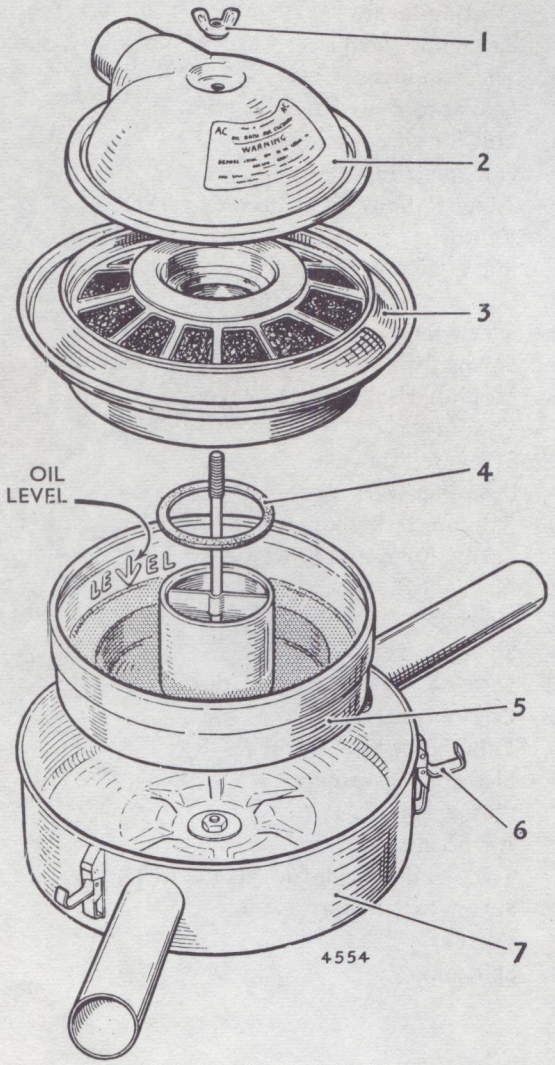

Fig. 11. *Exploded view of air cleaner*

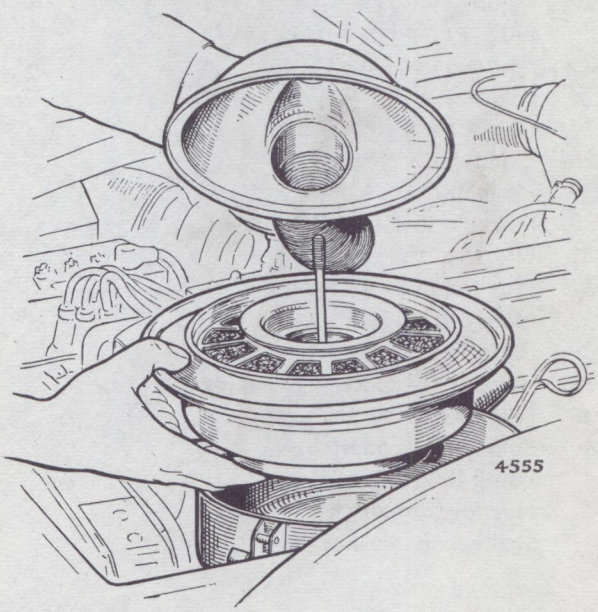

Fig. 12. *Replacing air cleaner top cover*

CARBURETTOR—ZENITH 42 WIA

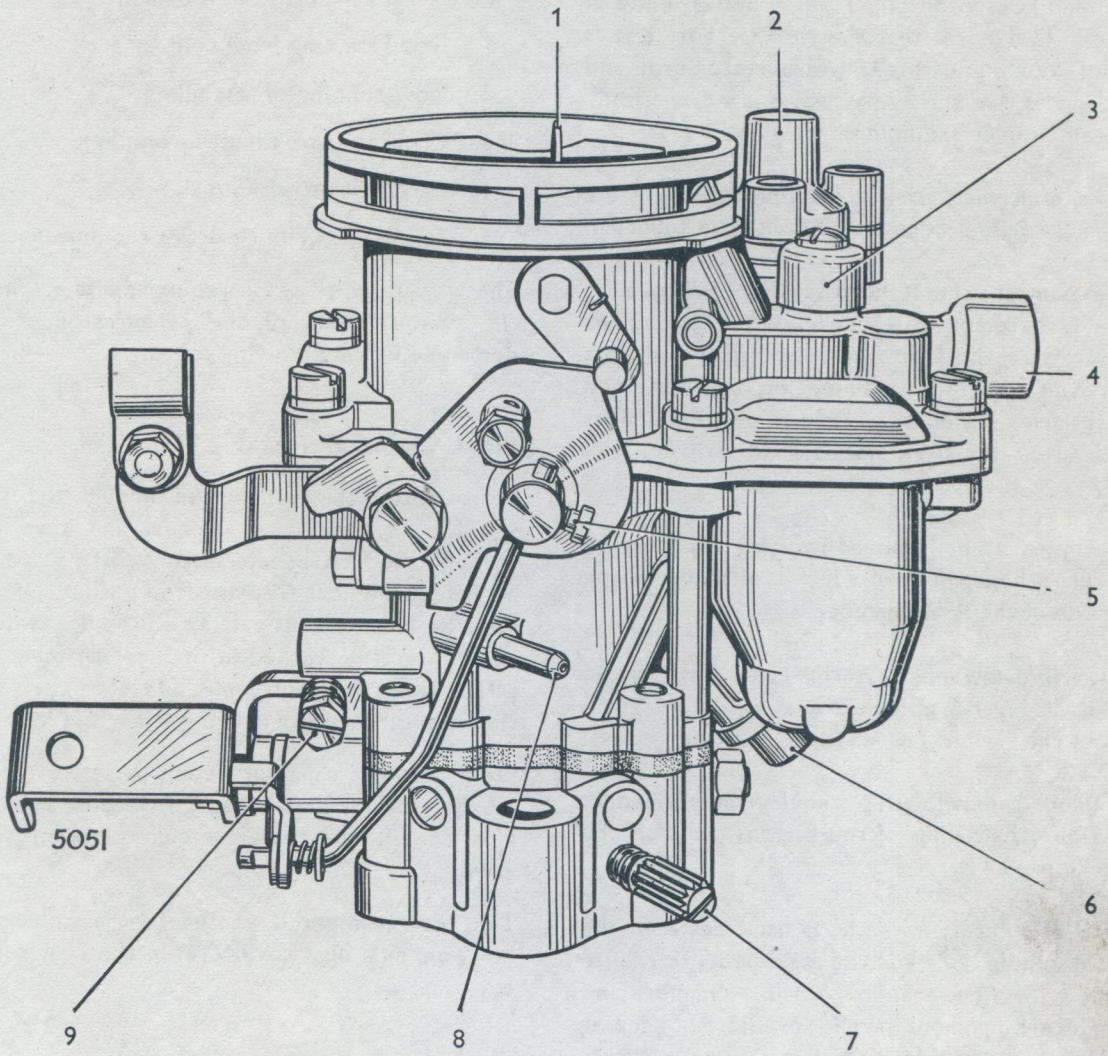

1. Strangler valve.
2. Economy device.
3. External air vent cover.
4. Fuel inlet.
5. Fast idle adjustment.
6. Main metering jet.
7. Slow running volume control screw.
8. Vacuum advance connection point.
9. Slow running speed adjustment screw.

Fig. 13. *Zenith 42 WIA carburettor*

GENERAL DESCRIPTION (see Fig. 13)

The Zenith 42 WIA carburettor is a downdraught model and is used on Super Snipe Series II and III engines. 42 denotes that the throttle bore size is 42 mm. W.I. stands for the carburettor type and "A" denotes that the by-pass valve is automatically operated by inlet manifold depression.

Jet sizes, orifice hole sizes and setting dimensions are given in the Data Section at the front of this manual.

By removing six cheese head screws, the top body of the carburettor can be removed. This allows easy access to the following items: float and float needle and seat, slow running jet, the combined by-pass valve and jet, the accelerator pump and its check valve, discharge nozzle, and delivery ball valve.

The main jet can be removed by using a spanner on its external hexagon head which is situated on the underside of the float chamber.

An external view of the carburettor is shown in Fig. 13. In Fig. 15 four sectional views are given showing the various jets and internal passageways.

An exploded view of the carburettor is given in Fig. 17 and the names of the various parts on the adjoining page.

A thick heat insulating joint is used between the throttle spindle body and the main body, to reduce heat flow from the manifold to float chamber and jets. This arrangement has the advantage of keeping the throttle warm which prevents icing up in cold damp weather. Four $\frac{1}{4}$" B.S.F. recessed cheese headed screws are used to hold these parts together.

Under extremely hot operating conditions fuel will sometimes boil in the carburettor after the engine has been stopped. To deal with this the main discharge jet drilling and high speed bleed are arranged to act as an anti-percolating device keeping the boiling fuel bubbles inside the carburettor.

CARBURETTOR OPERATION

The carburettor has to supply a correct fuel/air mixture to meet the following operating conditions.

1. Good starting from cold.
2. Slow running or fast idling.
3. Cruising (part throttle running).
4. Acceleration without flat spots.
5. Full power (Full throttle) requirements.

The way in which these requirements are met by the various parts of the carburettor are fully described in the following pages.

Float Chamber (see Fig. 15)

Petrol enters the carburettor through the inlet at the top of the float chamber, and then passes through the float needle seating (23). As petrol is admitted, the float (22) rises and pushes the needle down to its seat, thus cutting off the flow when the correct level is reached in the float chamber. This action is entirely automatic and continues all the time the carburettor is being fed with fuel.

From the float chamber petrol passes to the main jet (21), the by-pass valve (25) feeding to the by-pass jet (24), and to the accelerator pump suction valve (3).

The float chamber is vented to atmosphere by a hole, under a dust cover (14) in the float chamber cover.

Starting from cold (see Fig. 14)

Cold starting conditions require a very rich fuel/air mixture for a few seconds and weaker, but not normal mixture, until the induction manifold begins to warm up. Correct throttle opening is also important.

These requirements are met by the manually operated strangler butterfly valve (16) closing off

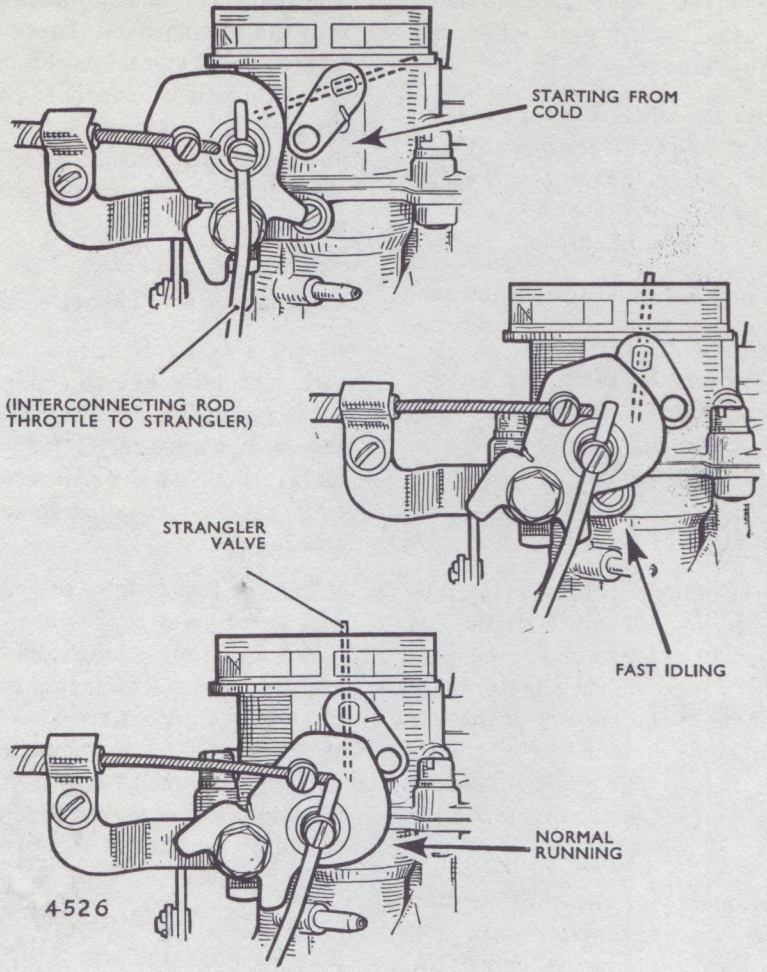

Fig. 14. *Strangler cam positions*

the air supply, and the strangler valve operating mechanism opening the throttle to the correct starting position, when the choke control is pulled out to start the engine.

When starting under cold conditions, the choke (strangler) control is pulled out as far as possible, the ignition switched on and the starter operated.

After the engine starts and when it begins to run erratically (or "hunt") the choke control should be pushed in far enough to give smooth running. The choke control should be pushed in fully as soon as possible without causing the engine to misfire or stop.

The choke (strangler) butterfly valve has unequal

areas each side of its pivot spindle and the valve can open against a light spring, even when the choke control is still pulled out.

When the engine starts, with the choke valve closed, air pressure acts on the larger pivoted area of the choke butterfly valve, opening it a small amount against its light control spring and the lower pressure in the carburettor intake.

This allows entry of sufficient air to prevent over-choking of the engine when starting from cold.

The carburettor strangler mechanism and various positions taken by the cam lever are shown in Fig. 14.

Slow running (see Fig. 15)

With the throttle in the idling position, the mixture is supplied by the idle jet (10) which draws fuel through the crossholes at the lower end of the main discharge jet (18). This fuel, which is metered by the small calibrated hole in the bottom of the idle tube, is partly emulsified by air drawn from the air intake through the air bleed hole and the mixture then passes along an internal channel to the idling orifice.

Idling is adjusted by means of the throttle stop screw (20) and the volume control screw (8). If screwed in, the throttle screw will open the throttle wider and increase the engine speed and when unscrewed the speed will be reduced.

The strength of the idling mixture is established by the size of the idle jet and that of the air bleed.

The jet size is variable, but the air bleed is drilled in the carburettor casting and is not intended to be altered.

The volume control screw (8) which has a tapered tip, and is on the engine side of the throttle, controls THE AMOUNT of idle mixture passed to the engine. To weaken the mixture, the screw should be turned clockwise; conversely it must be unscrewed to make the mixture richer.

The two small holes (6) at the throttle edge break into the idle channel. These assist in the transfer from the idle system to the main metering system as the throttle is opened, and provide a smooth and progressive action during that period; they are known as "progression holes", and are not adjustable. It is important that they are not tampered with.

Cruising—Part Throttle running (see Fig. 15)

As the throttle is opened still further, the main carburettor comes into action when suction at the small venturi (17) draws fuel and air mixture from the main discharge jet (18). The main metering jet (21) supplying the main discharge jet is calibrated to meter the fuel supply for economical running at cruising speeds.

When the fuel level in the main discharge jet falls, a series of holes which are in communication with the atmosphere through the high speed bleed (15) are uncovered. The fuel issuing from the main jet is consequently partly atomised by air entering these holes, and is completely broken up when entering the small venturi. It then passes through the large venturi (19) to the induction system. This condition persists at all normal driving speeds at part throttle.

The By-Pass Jet (see Fig. 15)

The main metering jet supplies the correct amount of fuel necessary for normal cruising speeds at part throttle. For maximum power at all speeds more fuel is required than that provided by the main metering jet. This extra fuel is metered through a by-pass jet (24) which can only pass fuel when the by-pass valve (25) is open.

The opening and closing of the by-pass valve is controlled by the action of the by-pass valve operating diaphragm (27) which is situated below the bottom of a cover held by three screws to the top part of the carburettor. This cover forms an airtight compartment that is connected by a passageway to the engine side of the throttle valve.

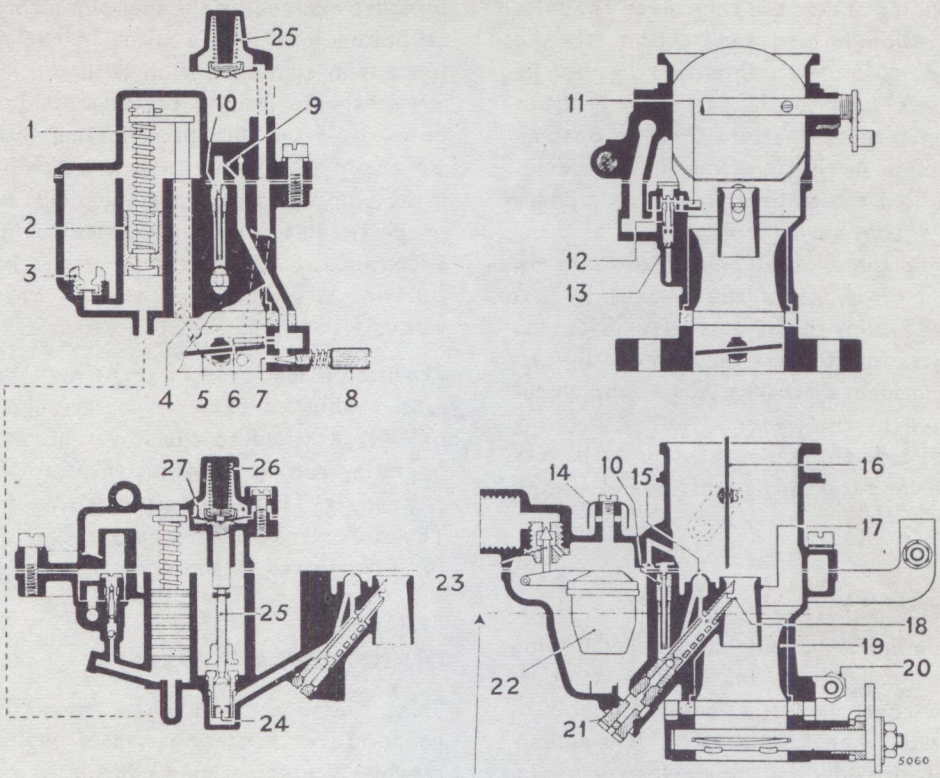

1. Accelerator pump piston operating rod and spring.
2. Accelerator pump piston.
3. Accelerator pump suction valve.
4. Connecting link.
5. Throttle valve.
6. Progression holes.
7. Slow running outlet hole.
8. Slow running volume control screw.
9. Slow running fuel supply passage.
10. Slow running jet.
11. Accelerator pump discharge nozzle.
12. Nozzle fixing screw.
13. Accelerator pump delivery valve ball.
14. Cover over air vent to float chamber.
15. High speed bleed.
16. Choke (strangler) valve.
17. Small venturi.
18. Main discharge jet.
19. Large venturi.
20. Slow running speed adjustment screw.
21. Main metering jet.
22. Float.
23. Float needle and seating assembly.
24. By-pass jet.
25. By-pass valve.
26. Diaphragm-operating spring.
27. Diaphragm.

Fig. 15. *Sectional views of Zenith 42 WIA carburettor*

At all light running and at cruising speed the inlet manifold depression is high and suction lifts the diaphragm and its plunger extension against its return spring (26) and the by-pass valve remains closed. At about three-quarters throttle opening the engine suction in the inlet manifold becomes insufficient to hold the diaphragm and its plunger up against its return spring pressure. The spring then pushes the diaphragm and plunger downwards, overcoming the pressure of the weaker by-pass valve spring and forcing the by-pass valve off its seat. This allows extra fuel to pass through the by-pass jet and into the main discharge jet to supplement the supply given by the metering jet. The rating (strength) of the diaphragm return spring is very carefully chosen and the spring must not be altered in any way.

The Accelerator Pump (see Fig. 15)

To obtain economical running at normal driving speeds, yet at the same time ensure faultless acceleration, a controlled and metered supply of fuel is required when the throttle is suddenly opened. This is provided by the accelerator pump, the object of which is to overcome any tendency for a lag in acceleration when the carburettor is adjusted to give a low consumption at normal road speeds. It is directly connected to the throttle spindle by suitable linkage (1) and (4), so that every time the throttle is snapped open a small quantity of metered fuel is injected into the air stream.

When the pump piston (2) is at the top of its stroke, the cylinder is charged with petrol admitted from the float chamber through the non-return valve (3). The piston is spring-loaded on its upper face. When the throttle (5) is opened, the piston is forced down by the spring above the piston which discharges a stream of petrol via an internal passage through the non-return pump discharge ball valve (13) and pump discharge nozzle (11) into the air stream. There is no spring above the steel ball.

The pump discharge nozzle (11) consists of a small die casting shown in section in Fig. 15. Fuel is fed into the nozzle centre and discharged under the pressure exerted by the fuel pump through a small calibrated hole into a space in the nozzle. This space is in communication with the float chamber air vent hole leading to the outside of the carburettor. From this space the fuel enters the main air stream by a larger hole in an emulsified state: if the pump discharge ball valve (13) is not seating properly, this arrangement assists in preventing a continuous fuel discharge from the nozzle by relieving it of the depression in the area of the venturi.

Provision is made for varying the pump travel, and long or short strokes may be arranged. With the link (4) attached to the lower hole in the pump operating rod, as shown in the top left hand illustration Fig. 15, the long pump stroke is obtained. The short stroke of the pump is given when the link (4) is connected to the upper hole.

DIAGNOSIS OF FAULTS

Since the function of the carburettor is closely connected with other items of engine operation, troubles are sometimes difficult to trace and the carburettor is often blamed when it is not at fault. When performance has previously been good any troubles can be quickly located by following an orderly system of investigation covering the various items.

Unless known to be in perfect condition, the following items should be checked before making carburettor adjustments.

Ignition System

1. Check spark plug condition. Clean and set gaps.
2. Check condition and tightness of H.T. and L.T. leads.
3. Check condition and setting of contact breaker points and contact breaker spring tension.
4. Ensure that the centrifugal and vacuum advance mechanism is working correctly.
5. Check ignition timing. Only small variations from the correct static timing are permissible.

Fuel System

1. Ensure that an adequate fuel supply is being delivered to float chamber.
2. Examine induction manifold and carburettor flange for air leaks.
3. Ensure that air cleaner (or silencer) is fitted correctly and not restricting air supply to carburettor. See servicing particulars at end of this section.
4. Check that fuel pump output pressure is correct to the figures given in General Data section of this manual.

Compression

1. Check valve clearances and compressions.
2. Make sure valves are not sticking.

Exhaust System

1. Check that exhaust pipe has not become damaged or blocked.

If the carburettor has been proved faulty a systematic check should be carried out in order to locate the exact source of the trouble.

Random adjustments on the carburettor are useless and harmful and must never be attempted.

Excessive Fuel Consumption

(*a*) Check that the strangler valve (choke) is fully open when not in use.

(*b*) Ensure there is no leakage of petrol at the fuel inlet, or where the main jet is screwed in the underside of the float chamber. The latter has a synthetic rubber ring to provide the seal and in good condition this ring is effective. In fitting a new ring to the main jet and plug, roll the ring from the threaded end of the jet to ensure it is not damaged in the fitting, and see that it is seating in the recess machined in the body of the plug portion of the jet.

(*c*) Check that main metering jet is as specified in the Data Section and that it is properly tightened.

(*d*) Check that by-pass valve is not sticking or leaking. If this occurs too much fuel will be fed to the main discharge jet under part throttle conditions. The valve assembly must be removed and any foreign matter removed by blowing through the valve orifice.

(e) Check that the gaskets between the carburettor bodies and both sides of the by-pass valve operating diaphragm are not allowing air leakage. The condition of the diaphragm should also be checked.

If air leaks exist the diaphragm return spring can open the by-pass valve too early which will allow too much fuel to be supplied under cruising (part throttle) conditions.

(*f*) Check that the ball beneath the screw securing the pump discharge nozzle is in position. See Fig. 15. It can easily be lost in dismantling the carburettor if the body is inverted after removal of the screw securing the pump discharge nozzle, or if the accelerator pump is operated with the screw removed.

If the carburettor has been assembled without this ball or if there is dirt under the ball or the ball seating faulty, the manifold depression may at certain speeds draw fuel from the pump nozzle. This will, of course, increase the fuel consumption.

With the air intake elbow removed it is possible to see the pump discharge nozzle and if the engine is run at a high speed no fuel should come from the nozzle after completion of the accelerator pump stroke.

(*g*) Check that the fuel level is correct.

Insufficient Top Speed

(*a*) See that the throttle valve is opening fully.

(*b*) Check the fuel supply to the float chamber. Fuel pump output pressure should be checked. A condition can arise when, due to worn fuel pump linkage or improperly fitted pump, the pump output is too low under full throttle conditions.

(*c*) See that the by-pass jet is clear and of the specified size. To do this the by-pass valve must be removed from the float chamber, but no attempt must be made to remove the jet orifice cup from the valve body. The jet number is stamped on the hexagon of the body.

Bad Slow Running, or Stalling or Deceleration

(*a*) Check that the idle jet is clear.

(*b*) Blow through the slow running system passages with clean compressed air.

(*c*) Ensure that the joint fitted between the top part of the carburettor and the float chamber is correctly fitted. Air must not leak into the slow running system passageways.

(*d*) Make certain that the screws securing the throttle barrel to the main body of the carburettor are tight, and that the hole is clear which carries the mixture through the main body, heat insulator, and throttle body. A little jointing compound should be used between insulator faces and body faces.

(*e*) Remove the slow running volume control screw and see that its tapered end is in good condition. If worn, it should be changed. The spring under the screw head must be long enough to prevent the screw from vibrating from its set position.

(*f*) Check that the throttle spindle is not badly worn. Wear at this point allows an excessive amount of air to enter the carburettor under slow running conditions.

Flat Spot at Small Throttle Opening

(*a*) Adjust the idling speed to give smooth running, just off rich or "hunting" condition.

(*b*) If the flat spot is still evident, check that the idle and progression holes are clear.

(*c*) Check that the idle jet is clear.

Poor Acceleration

(*a*) Make certain the calibrated orifice in the pump discharge nozzle and the drillings in the screw securing the nozzle through which the petrol must pass on its way to the pump nozzle are clear.

(*b*) Check that the pump piston works freely in the pump cylinder.

(*c*) See that the non-return (suction) valve to the pump cylinder is clean and will close effectively, and that the assembly is screwed tightly into the base of the float chamber.

(*d*) Check that the pump delivery ball valve is in position below the discharge nozzle fixing screw.

(*e*) Two settings are available for the pump stroke by using one of the two holes in the pump operating rod. The operating link is normally used in the bottom hole of the rod. This gives the longest pump stroke. If the connecting link is found in the upper hole, which gives the shortest pump stroke, it should be changed over to the lower hole.

(*f*) Dismantle the economy device to make certain the stem on the insert fitted in the centre of the diaphragm will move freely. On snap opening of the throttle, the lower depression in the manifold will permit the spring above the diaphragm to force this stem down and open the by-pass valve to provide additional fuel apart from that coming from the metering jet and from the pump nozzle. Therefore, any obstruction in the by-pass jet or incorrect operation of the by-pass valve will affect acceleration.

(*g*) Flat spots or hesitation on slow progressive throttle opening can be caused by incorrect

adjustment of the slow-running mixture or by the progression hole or holes in the throttle barrel being partially obstructed.

Difficult Starting from Cold

Ensure there is petrol in the float chamber, and that it is replenished by fresh petrol from the fuel pump within a few seconds of rotating the engine by the starter.

See that the strangler flap in the air intake closes completely when the choke (strangler) control is operated. From examination of the strangler control on the carburettor it will be seen that there is no mechanical connection between the choke cable and the spindle on which the strangler flap is fitted. Movement of a cam lever on the side of the air intake permits the spring loading of the strangler spindle arm to close the flap in the air intake. Therefore, undue friction by reason of bent strangler spindle, binding bearings or a broken spring could explain non-closure of the flap in the intake. Removal of the air cleaner connection will enable this to be checked.

Check that the throttle opens when the strangler valve is fully closed. This amount of throttle opening is very important and must agree with the measurement given in the Data Section under Carburettor, Fast Idle. The correct method of making this setting is given under ADJUSTMENTS.

Difficult Starting when Hot

This is caused by a rich mixture produced by flooding of the carburettor or incorrect use of the strangler. Any fuel that runs into the inlet manifold should drain away through the inlet manifold drain pipe and a check should be made to see that this pipe and its ball valve end are clear.

Provided the carburettor is not constantly flooding, the engine can usually be started after gently opening the throttle to its fully open position and rotating the engine on the starter with the ignition switched on.

ADJUSTMENTS

The only adjustments that may need attention in service are:—

(*a*) Slow running.
(*b*) Throttle, fast idling for starting.
(*c*) Accelerator pump stroke.
(*d*) Fuel-level.

Slow Running

The mixture strength at idling can be varied within limits without changing the slow-running jet, by regulation of the volume control screw in the throttle barrel. Turning the screw clockwise reduces the annulus between the conical end of the screw and the hole in the barrel from which the idle mixture is discharged, and will weaken the slow-running mixture. Unscrewing the volume control screw will enrich the mixture by increasing the annulus and the depression over the slow-running jet.

Slow running speed is adjusted by rotating the throttle stop screw clockwise to increase engine speed, and anti-clockwise to decrease engine speed. The correct slow running speed is approximately 500 r.p.m. At higher idling speeds "creep" will occur on cars equipped with automatic transmission.

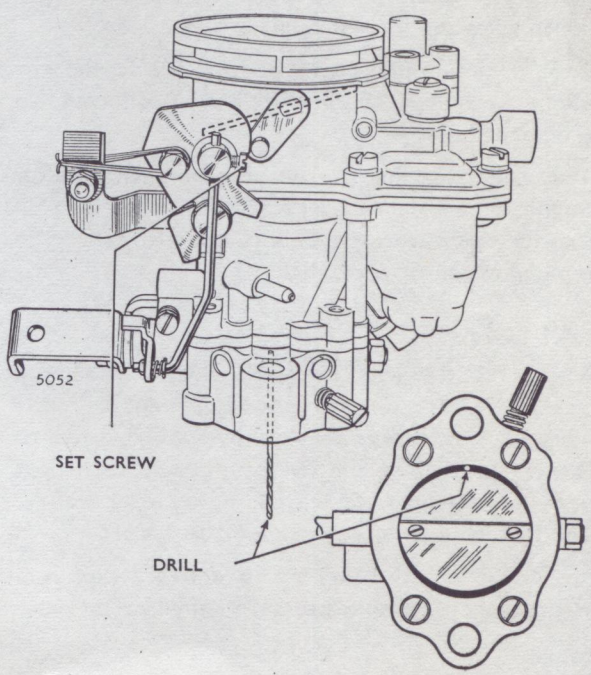

Fig. 16. *Checking fast idle starting setting*

Throttle, Fast Idle for Starting (see Fig. 16)
This adjustment ensures that the throttle is open to the best position for cold starting when the strangler is fully closed and can only be made with carburettor removed from the engine.

To make this adjustment slacken the set screw on the fast idle rod connection on the strangler-operating cam. Tie this cam in its full over starting position. Insert a drill shank, of the size given in the Data Section, between the throttle and the carburettor body in line with carburettor fixing bolt holes as shown in Fig. 16 inset. Tighten the adjustment set screw.

Release strangler-operating cam.

Again pull strangler cam to its full over position and check that throttle valve is open to the drill diameter dimension.

Accelerator Pump Stroke
The two holes in the pump-operating shaft allow the pump-operating link to be connected so as to vary the pump stroke.

Normally the link is connected to the lower hole which gives the longest pump stroke.

If the minimum fuel discharge from the accelerator pump is required, the link should be connected to the upper hole.

The connecting link position can be changed after removing the main metering jet and loosening off the nut that secures the short operating lever on the end of the throttle shaft.

Fuel Level
The correct fuel level below the float chamber top face is ·75" (19 mm.). This adjustment is rarely needed. The level is checked by supplying fuel to the carburettor at the correct fuel pump output pressure when the car is standing on level ground. The following procedure should be adopted:—

1. Disconnect the fuel pump delivery pipe and connect a reliable pressure gauge or mercury manometer to this point.
2. Fit up a small tank of fuel (a quart oil tin) to feed the carburettor through a rubber tube. This tube should be connected to the fuel pipe at the end previously removed from the fuel pump delivery union.
3. Run the engine at a fast idle speed and note the fuel pump output pressure. This should be similar to that given in the Data Section and if required may be corrected by adding or removing joints between the fuel pump and cylinder block face.
4. Remove the by-pass valve cover, diaphragm and diaphragm plunger guide. This allows the fuel to be seen. Draw off some of the fuel with a syringe or drain off by partly removing and replacing the main metering jet.
5. Support the small fuel tank at a height above the carburettor float chamber edge that will give the same pressure at the carburettor fuel inlet connection as a correctly fitted fuel pump.

   The approximate heights for the following pressures are:—

2 P.S.I. (·14 kg./sq. cm.)	6½ ft. (1·9 metres)
2½ ,, (·18 ,,)	8 ,, (2·4 ,,)
3 ,, (·21 ,,)	9½ ,, (2·7 ,,)

6. Turn on the fuel from the small tank and with a depth gauge measure the distance from the diaphragm mounting face to the fuel surface. This is done after removing the diaphragm cover and diaphragm.

   Remove the carburettor top, measure the distance from the large face to the diaphragm mounting face. To this figure add the thickness of the joint used between the main carburettor body and top body. Subtract the total from the figure previously obtained with the depth gauge.

   This gives the distance of the fuel from the float chamber edge.

7. If any alteration is needed to the fuel level thin aluminium washers are added or removed from under the float needle seating.

DISMANTLING FOR CLEANING

(see Figs. 17 and 18)

Before dismantling, the carburettor should be cleaned.

1. Remove six cheese head screws holding the top of the carburettor to the carburettor body.
2. Remove small plastic bridge piece above float fulcrum and lift out float and its fulcrum pin.
3. Remove four cheese head screws holding throttle body to carburettor body.
4. Remove venturi (choke tube) locating screw and lift out venturi.
5. Remove main metering jet which also holds the main discharge jet in position. This jet is a push fit into the carburettor body and may be extracted by pulling on a suitable taper tap screwed into the exposed uncalibrated end of the jet. Sometimes this jet is a slacker fit and falls out after removal of the main metering jet. Care is needed to ensure that it is replaced with the discharge end as illustrated in Fig. 15. It is not always necessary to remove the main discharge jet when cleaning the carburettor as it can be blown through with compressed air.
6. Remove slow running jet.
7. Remove accelerator pump suction (intake) valve. This valve has a fine gauze cover.
8. Remove by-pass valve and jet assembly. The by-pass jet is pressed into the valve body and cannot be removed.
9. Remove link connecting accelerator pump rod to lever on the throttle shaft noting to which hole in the lever the link was coupled. Lift out accelerator pump rod and piston assembly.
10. Keeping the carburettor in a vertical position remove the cheese head screw securing the accelerator pump discharge nozzle. Remove the nozzle and its joint. A small steel ball, without a spring, is fitted below the nozzle securing screw. This ball is the accelerator pump delivery valve. Turn the carburettor upside down over a small box to catch the small steel ball.
11. Remove the three screws securing the by-pass valve operating diaphragm cover. Remove cover, diaphragm spring, diaphragm, and diaphragm plunger.

The carburettor is dismantled sufficiently for cleaning. There is no need to remove the high speed bleed as this cannot be done without destroying it.

INSPECTION AND CLEANING

A list of jet sizes and other specifications for the carburettor is given in the "Data" section at the beginning of this manual.

Check that all jets and orifices are clean and undamaged. When cleaning do not pass a wire or any similar hard material through the jet orifice. These orifices are carefully calibrated and the slightest alterations of size will affect the flow through them. If a change of jet size is necessary, obtain a new jet from the makers. Do not attempt to ream or otherwise tamper with the old one.

Inspect all valve seats and ensure that they are perfectly clean and free from foreign matter. All parts should be washed with clean fuel and all passage-ways in the carburettor bodies should be blown through with CLEAN compressed air. An exploded view of the carburettor is shown in Fig. 17 and the names of the various parts given on the adjoining page.

Reassembly

This is of course a reversal of the dismantling procedure. Close attention should be given to the following points:—

1. The top cover gasket should be renewed to ensure that no air leaks into the slow running passageways.
2. Joints on each side of the by-pass valve operating diaphragm should also be renewed.
3. Diaphragm spring must seat squarely in the metal cup on the top of the diaphragm when replacing the cover.

(Cont. on page 33)

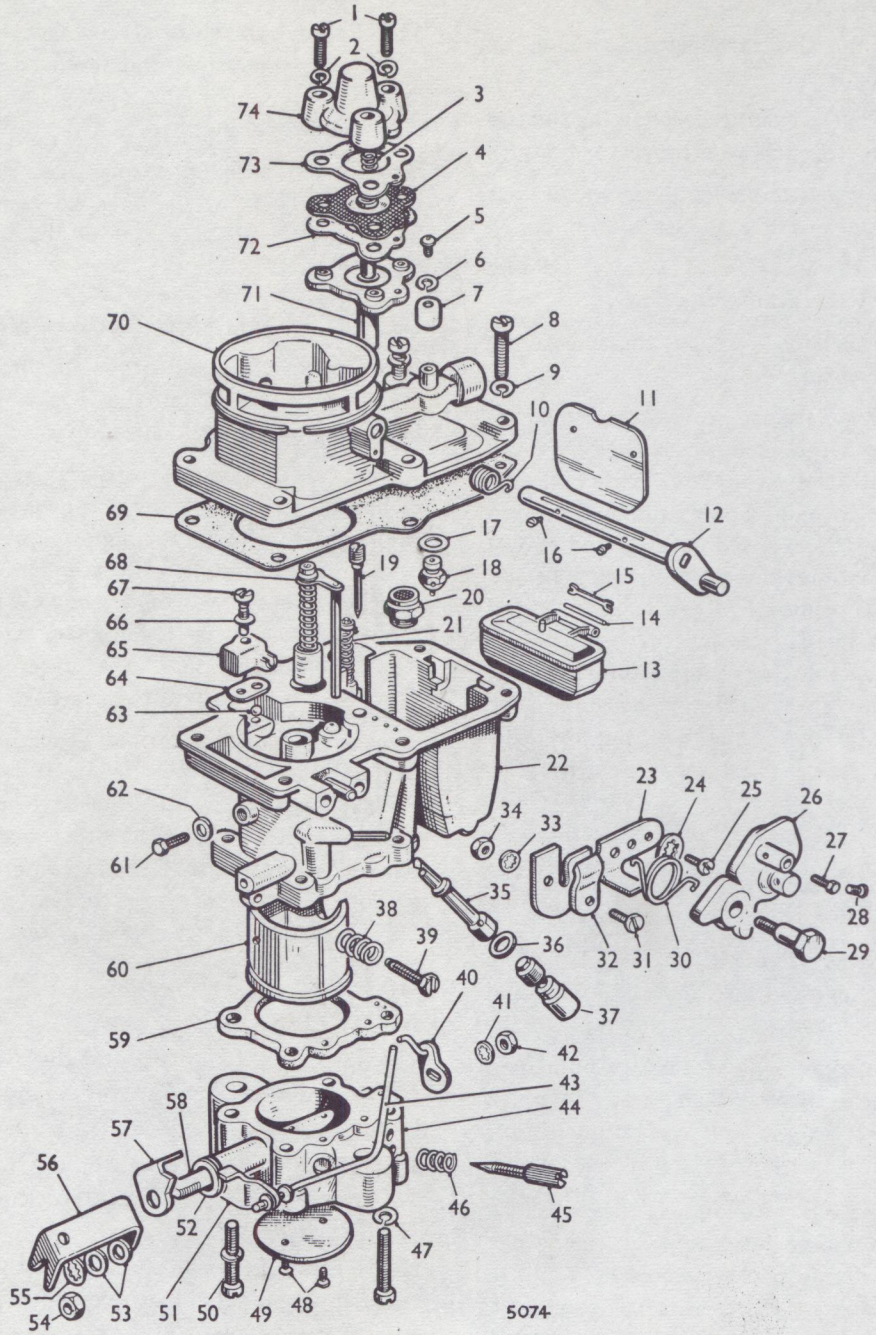

Fig. 17. *Exploded view of carburettor*

CARBURETTOR PARTS (see Fig. 17)

1. Economy cover fixing screw.
2. Spring washer.
3. Diaphragm return spring.
4. Diaphragm.
5. Screw, for air vent cover.
6. Spring washer.
7. Float chamber air vent cover.
8. Screw, float chamber cover to main body.
9. Spring washer.
10. Spring controlling automatic opening of choke.
11. Choke butterfly valve.
12. Choke valve spindle and lever.
13. Float.
14. Float pivot pin.
15. Float pivot pin retainer.
16. Choke butterfly retaining screws.
17. Float needle seating washer.
18. Float needle and seating assembly.
19. Slow running jet.
20. Accelerator pump check (suction) valve.
21. By-pass valve.
22. Carburettor main body.
23. Choke control cable bracket.
24. Shakeproof washer.
25. Bracket fixing screw.
26. Choke lever operating cam.
27. Screw, securing choke operating wire.
28. Screw, securing fast idle rod.
29. Pivot bolt for cam.
30. Cam return spring.
31. Clip fixing screw.
32. Clip securing choke control outer cable.
33. Shakeproof washer.
34. Nut.
35. Main discharge jet.
36. Metering jet sealing ring.
37. Metering jet.
38. Spring for slow running speed adjustment screw.
39. Slow running speed adjustment screw.
40. Accelerator pump operating lever and link.
41. Shakeproof washer.
42. Nut.
43. Fast idle rod connecting choke and throttle.
44. Carburettor lower body.
45. Slow running volume control screw.
46. Ditto spring.
47. Spring washer.
48. Throttle butterfly valve fixing screws.
49. Throttle butterfly valve.
50. Screw, throttle body to main body.
51. Floating lever.
52. Floating lever bearing.
53. Spacing washer.
54. Nut.
55. Shakeproof washer.
56. Throttle lever.
57. Throttle lever stop plate.
58. Throttle spindle.
59. Heat insulator, throttle body to main body.
60. Choke tube (venturi).
61. Choke tube fixing screw.
62. Ditto spring washer.
63. Accelerator pump delivery valve ball.
64. Joint.
65. Pump discharge nozzle.
66. Washer.
67. Discharge nozzle fixing screw.
68. Accelerator pump piston and rod.
69. Joint gasket.
70. Float chamber cover (carburettor top body).
71. Push rod guide.
72. Joint gasket, push rod guide.
73. Joint gasket, cover.
74. Economy cover.

4. The small gasket below the accelerator pump discharge nozzle should be removed.
5. The synthetic rubber ring fitted in the groove around the main metering jet head, must be in good condition.
6. The accelerator pump delivery valve ball must be replaced before inserting the discharge nozzle screw.

THIS BALL MUST NOT BE TAPPED ON TO ITS SEATING.

If this is done, it may jam into the hole immediately below its seating.

7. A little jointing compound should be used on the heat insulator faces when refitting the throttle body to the main carburettor body.

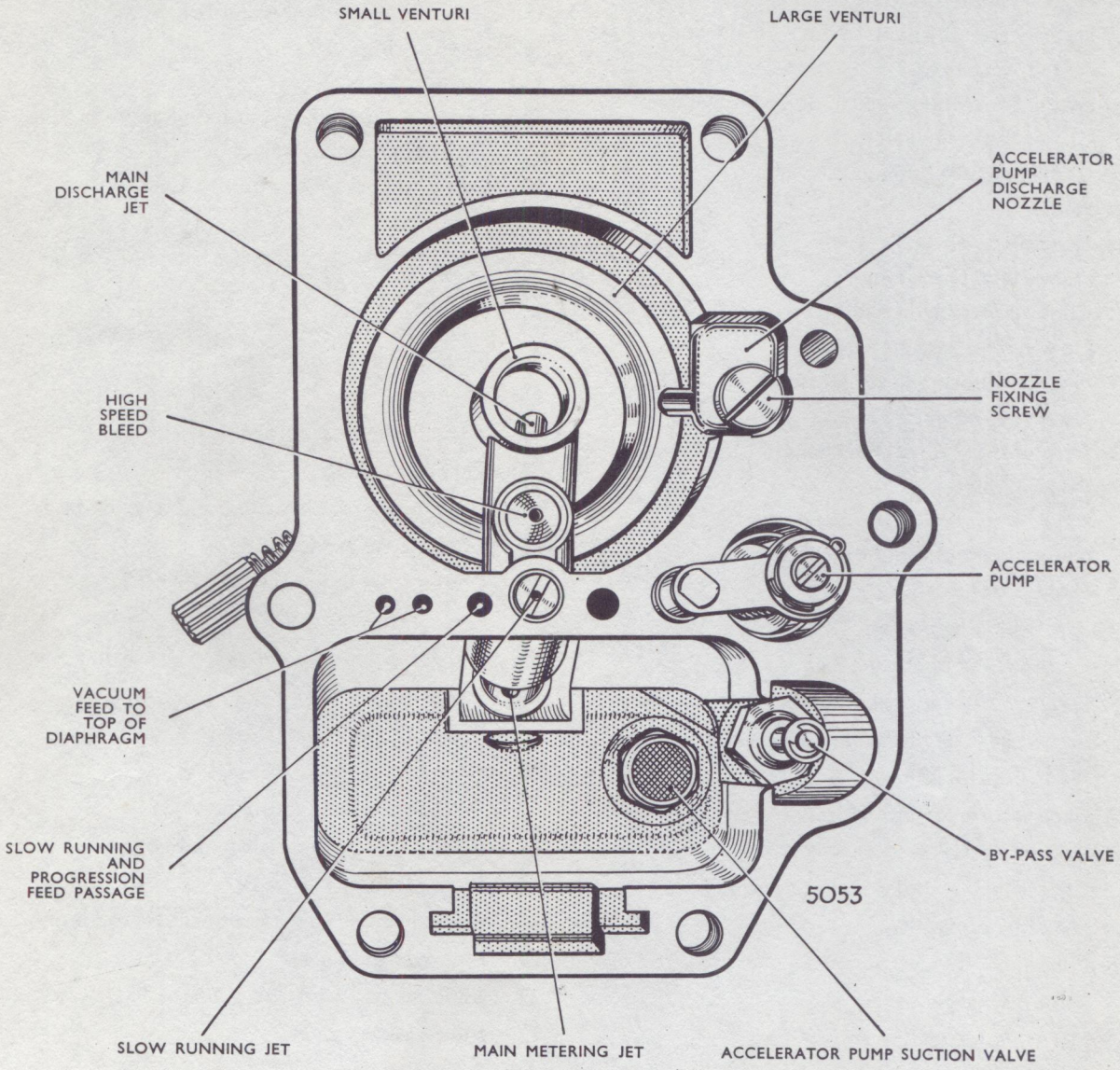

Fig. 18. *Parts visible with top of carburettor removed*

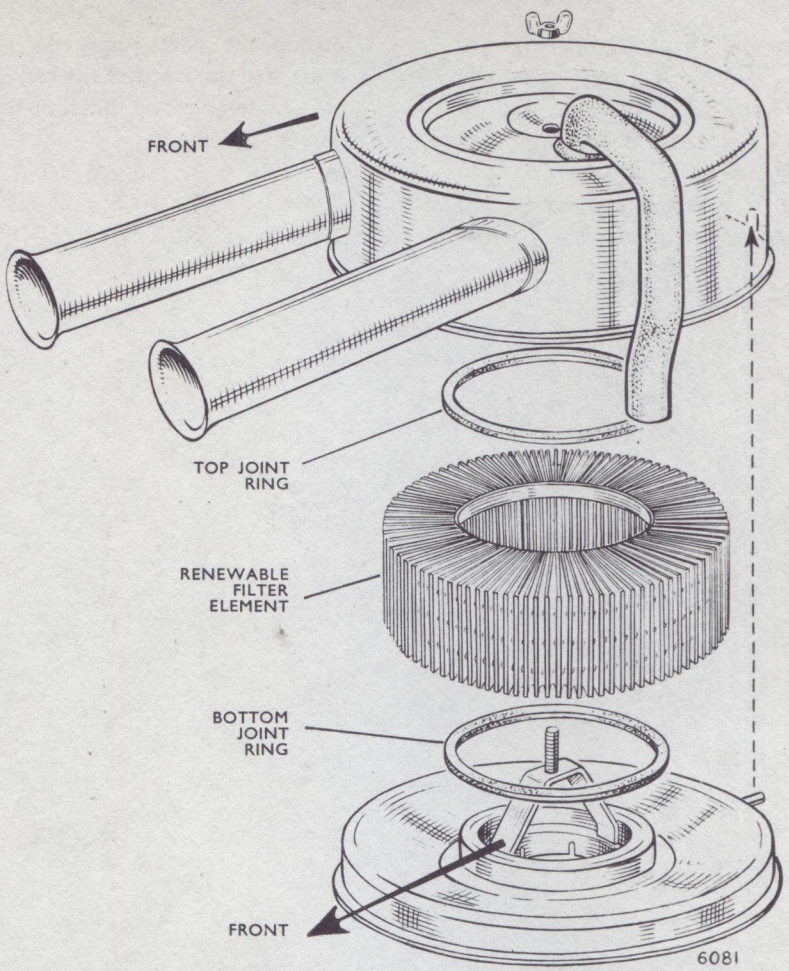

Fig. 19. *Exploded view of air cleaner*

AIR CLEANER AND SILENCER—Dry element type

The interval at which the combined type air cleaner and silencer filter element should be renewed will vary according to the conditions under which the car is operating.

For town work and areas where the roads and atmosphere are relatively dust free, this should be done at not less than 12,000 miles (19,200 km.).

Where roads are bad and dust is prevalent, or where there is a smoke- or fog-laden atmosphere, renewing should be carried out more frequently.

To Remove and Replace, or Renew Filter Element (see Fig. 19)

1. Remove wing nut and lift off top cover.
2. Lift out filter element.
3. Clean out the top cover and bottom plate, ensuring that no foreign matter enters the carburettor air intake.

4. Ensure that the top and bottom joint rings are in good condition. They are fitted inside the upper casing above the filter element, and on the bottom casing below the element.
5. Place the filter element in position on the bottom plate and replace the top cover and wing nut. To ensure proper engine performance the parts marked "front" in Fig. 19 must face the front of the car. Some air cleaners have a peg in the bottom housing to ensure correct assembly.

Note

IT IS IMPORTANT THAT THE FILTER ELEMENT IS USED DRY. IT DOES NOT REQUIRE OIL.

CARBURETTOR

TYPE — STROMBERG CD

Page

DESCRIPTION ... 37

OPERATION
—Fuel level ... 39
—Starting ... 40
—Slow running ... 40
—Part and full throttle ... 41
—Acceleration ... 42

STARTING THE ENGINE
—From cold ... 42
—When warm or hot ... 42

DIAGNOSIS OF FAULTS
—Excessive fuel consumption ... 43
—Faulty slow running ... 44
—Insufficient top speed ... 44
—Flat spot at small throttle openings ... 44
—Poor acceleration ... 44
—Difficult starting from cold ... 44

ADJUSTMENTS
—Slow running and synchronising carburettors ... 44
—Choke control ... 46
—Fast idle speed for cold starting ... 46
—Float level ... 47
—Needle position ... 47
—Centralising jet ... 47
—Full throttle position and accelerator pedal position ... 48

SERVICING
—Piston hydraulic damper ... 48
—Diaphragm—to renew ... 48
—Piston return spring ... 49
—Dismantling for cleaning ... 49
—Cleaning ... 49
—Reassembly after cleaning ... 49
—Removal and refitting ... 49

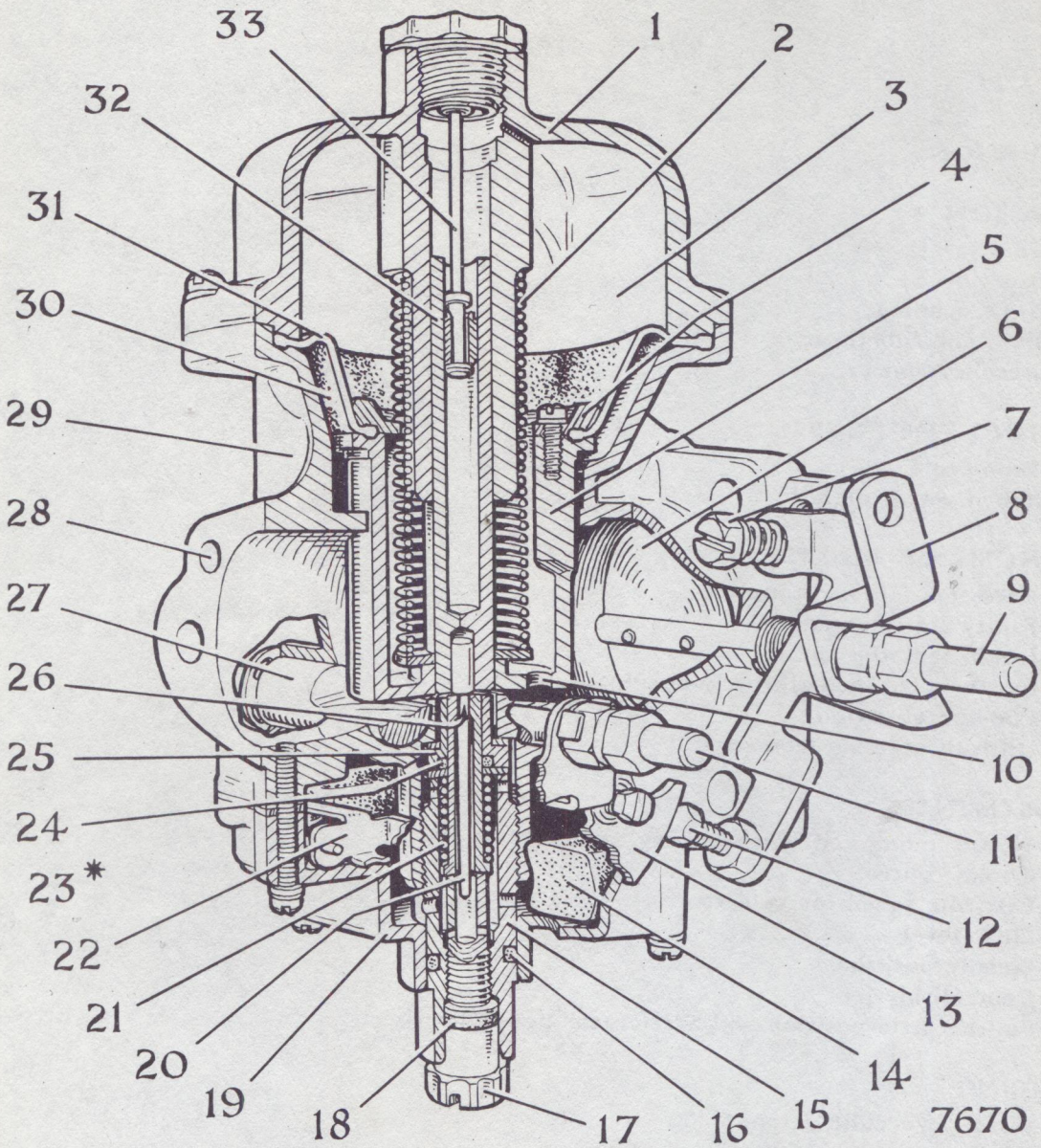

* *Item 23 is shown in Fig. 3*

Fig. 1. *Stromberg CD carburettor—part sectioned view*

Key—Figs. 1 to 8.

1. COVER FOR DEPRESSION (SUCTION) CHAMBER
2. AIR VALVE RETURN SPRING
3. SUCTION CHAMBER
4. RETAINING RING FOR DIAPHRAGM
5. AIR VALVE
6. THROTTLE PLATE
7. SLOW RUNNING SPEED ADJUSTMENT SCREW
8. THROTTLE LEVER
9. THROTTLE SHAFT EXTENSION
10. DEPRESSION TRANSFER HOLES (ONE SHOWN)
11. STARTER BAR SHAFT EXTENSION
12. FAST IDLE ADJUSTMENT
13. FAST IDLE CAM
14. FLOAT
15. JET BUSH RETAINING SCREW
16. "O" RING
17. JET ADJUSTMENT
18. "O" RING
19. FLOAT CHAMBER
20. METERING NEEDLE
21. JET ORIFICE SPRING
22. FLOAT FULCRUM
23. FLOAT NEEDLE AND SEATING (SEE FIG. 3)
24. "O" RING
25. CENTRALISING BUSH
26. JET ORIFICE
27. STARTER BAR
28. AIR FEED HOLE TO FLOAT CHAMBER
29. CARBURETTOR BODY
30. AIR CHAMBER BELOW DIAPHRAGM (AIR FEED HOLE NOT SHOWN)
31. DIAPHRAGM
32. GUIDE SPINDLE OF AIR VALVE (5)
33. AIR VALVE HYDRAULIC DAMPER

STROMBERG CD CARBURETTOR

DESCRIPTION (See Figs. 1 and 2)

The Stromberg carburettor suffix letters CD, denote that it is a constant depression type of carburettor. This principle of operation, sometimes referred to as constant vacuum, uses a variable choke and a needle of suitable profile moving in a single jet, to provide the fuel air mixture needed to meet all conditions of engine operation.

Part sectional and external views of this carburettor, are shown in Figs. 1 and 2. The principal parts of the carburettor are: the main body (29) containing the throttle (6), the float chamber (19), and the depression or vacuum chamber (3).

The float chamber (19) is situated around the jet bush retaining screw (15). The float (14) is made from a synthetic rubber and being solid, it cannot puncture.

When the choke control is pulled out, the cam (13) partly rotates and opens the throttle (6) to the correct position for cold starting. It also turns the starting bar (27) which lifts the air valve piston (5) and needle (20) so that the discharge area of the jet annulus between the jet (26) and needle (20) is enlarged to give the correct amount of mixture enrichment for cold starting.

At idling speed the two thin bosses on the air valve piston (5) rest on the carburettor body below the piston. The jet (26) to needle (20) annulus area is then set by the jet adjustment (17) so that in conjunction with the throttle slow running setting, correct idling is obtained.

Above idling speed, the needle (20) and piston (5) are raised by air pressure acting on the underside of the diaphragm (31) above which a lower pressure exists, due to PARTIAL transference of inlet manifold vacuum to the depression chamber as the throttle is opened. Opening the throttle raises the piston and closing the throttle lowers the piston. This action gives the required fuel/air ratio and at the same time maintains an almost constant air speed which ensures good atomisation of the fuel as it leaves the jet annulus.

A light compression spring (2) assists to return the piston when the depression above the diaphragm (31) is reduced, as the throttle is closed.

The hydraulic damper (33) in the piston guide (32) prevents sudden rising of the air valve piston (5)

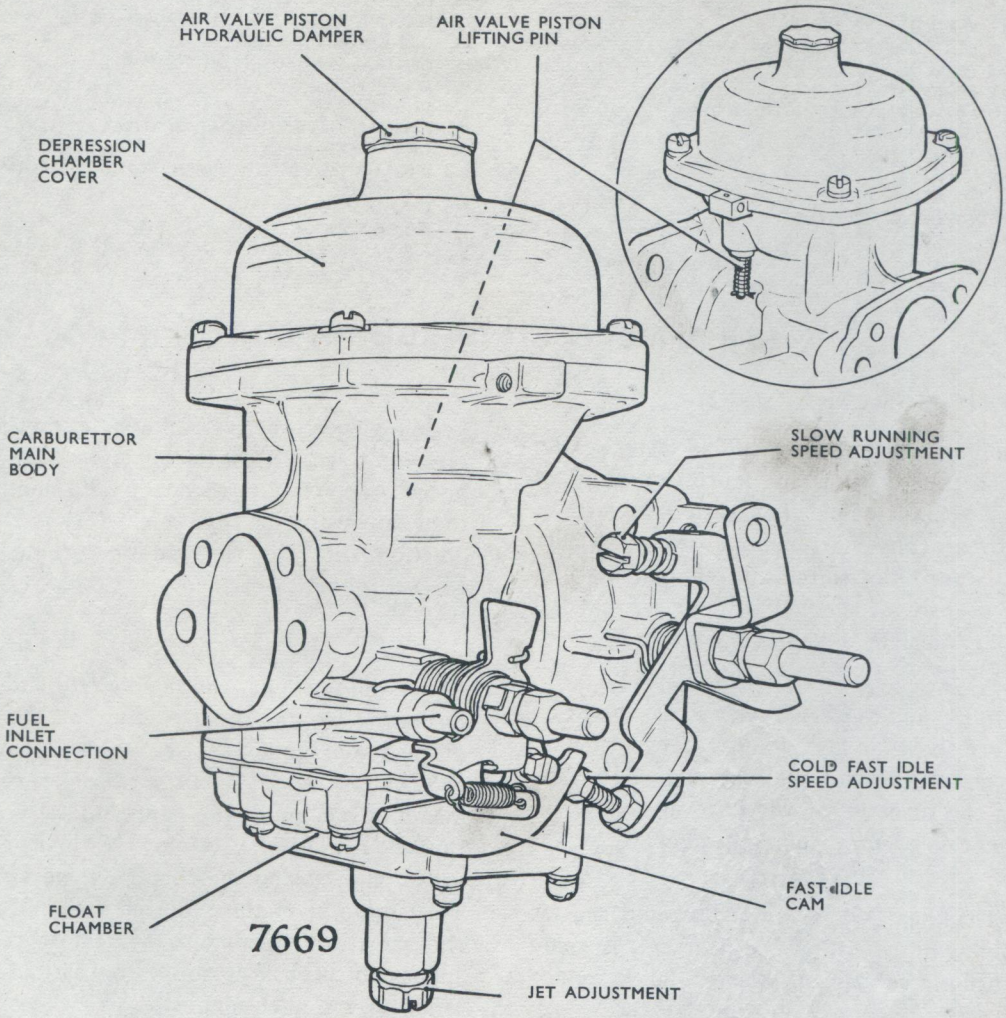

Fig. 2. *Stromberg CD carburettor—general view*

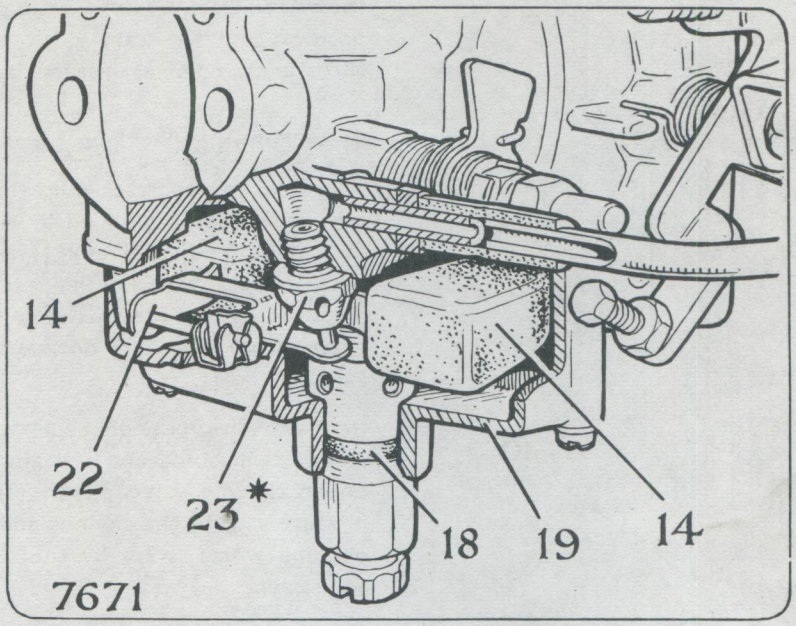

Fig. 3. *Float chamber, internal view*

when the throttle is opened quickly for acceleration. This action gives the temporary enrichment needed during acceleration.

The flexible diaphragm (31) is clamped between the depression chamber cover (1) and air valve piston (5) upper end. It provides the means needed to give an air seal between the air valve piston and depression chamber.

In this particular application, where two carburettors are used, the throttles are coupled together with a linkage that allows the rear carburettor throttle to open slightly before the front carburettor throttle. This gives a more progressive throttle action when the driver depresses the accelerator pedal. The starter bars (27) are also coupled together.

OPERATION

Fuel level (See Figs. 1 and 3)

The flow of fuel into the float chamber is controlled by the needle valve (23) which is closed by the float (14) when the fuel rises to its correct level. As the fuel level falls the float lowers and the needle valve admits fuel until the correct level is again reached.

The float chamber is air vented through an internal drilling to the air intake flange so that only filtered air reaches the float chamber. Fuel reaches the jet (26) through a drilling in the jet assembly securing screw (15).

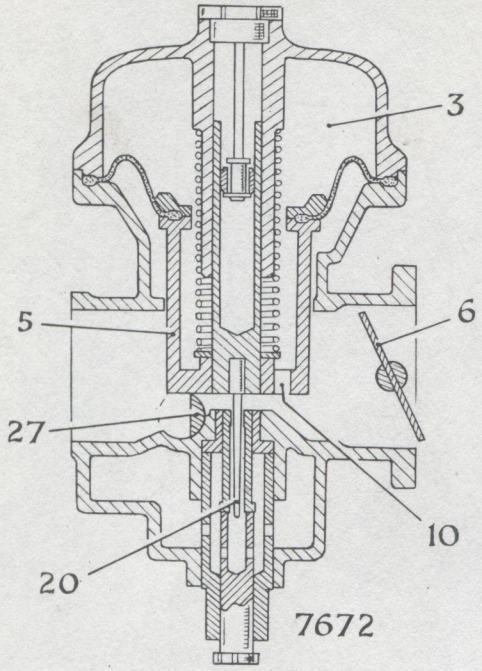

Fig. 4. *Starting operation*

Starting (See Figs. 1 and 4)

Cold starting conditions require a very rich mixture for the first few seconds of running and a means of weakening the mixture progressively as the engine warms up. Correct throttle opening to the fast idle position is also necessary to prevent the engine from stalling after it fires. These conditions are met by the starter bar (27) raising the air valve piston (5) and needle (20) to increase the jet discharge area, and the cam (13) opening the throttle to the fast idle position, when the choke control is pulled out. Rotation of the starter bar (27) also restricts the air flow and increases the depression at the jet annulus.

Directly the engine starts inlet manifold depression rises. Some of this depression passes through the throttle opening and the two holes (10) in the lower end of the piston air valve (5) to the depression chamber (3). Air pressure then raises the air valve piston (5) far enough to give the air flow needed to prevent the engine from stalling.

As the engine warms up, and the choke is pushed in, the starter bar (27) lowers the piston to its normal position and the cam (13) returns so that the throttle can come against its slow-running stop.

Slow running (See Figs. 1 and 5)

There is no separate idling circuit on this carburettor. Fuel is supplied by the jet (26) which is positioned by the jet adjustment (17) so that the annular space, between the needle (20) and jet (26), gives the correct fuel discharge for idling when the engine has reached its normal operating temperature.

In this condition the piston air valve (5) rests on the carburettor body, and the amount of air passing under the air valve piston (5), and quantity of mixture used by the engine depends on the throttle opening which is set by the slow running speed adjustment screw (7).

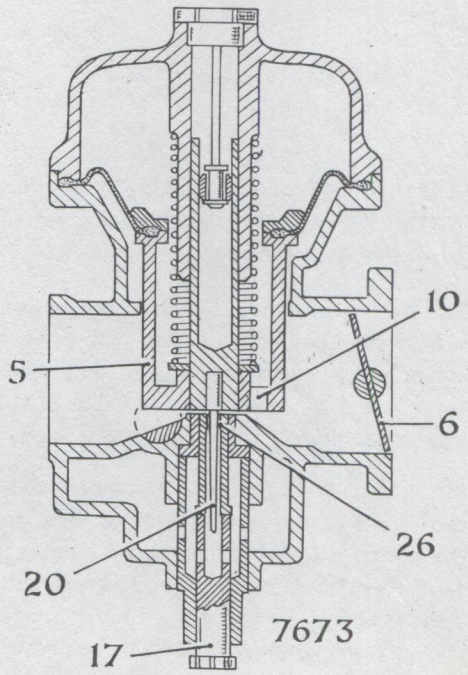

Fig. 5. *Slow running operation*

Part and full throttle driving

(See Figs. 1, 6, 7 and 8)

When the throttle is opened the air valve piston (5) and needle (20) rise with increase of engine speed to allow the supply of an increased quantity of fuel/air mixture to meet engine requirements.

Air flow is controlled by the throttle, and the air valve piston (5) which acts as a variable choke. Fuel metering is controlled by the varying diameters of the needle (20) which controls the annular discharge area of the jet to give the amount of fuel needed for any position taken by the air valve piston (5), as it rises and falls with increasing or decreasing engine speed.

Whenever the air flow under the air valve piston (5) reaches a certain speed a low enough depression is created above the diaphragm (31), through the two holes (10), for atmospheric pressure; acting on the underside of the diaphragm, to lift the air valve piston assembly so that it "floats" on air pressure.

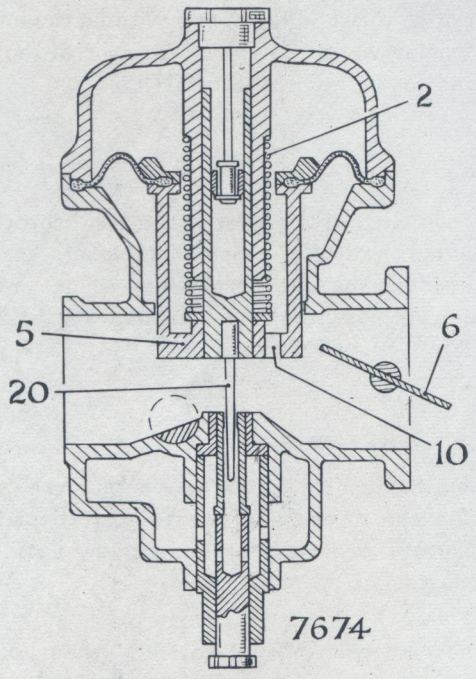

Fig. 6. *Part throttle—moderate engine speed operation*

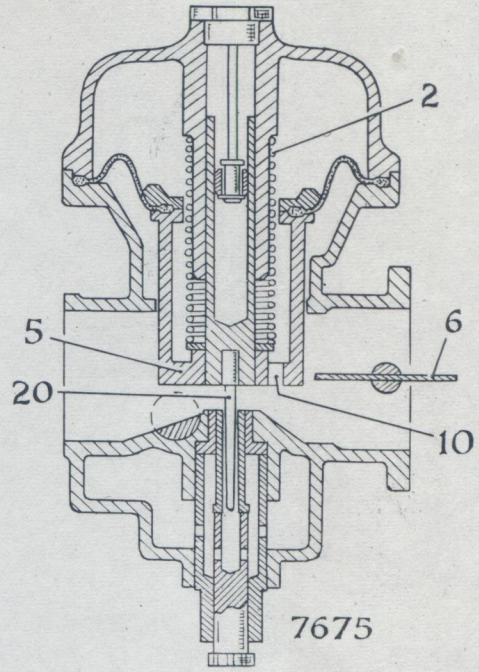

Fig. 7. *Full throttle—low engine speed operation*

When the throttle is opened from the idling position, some inlet manifold depression passes to the carburettor side of the throttle. This raises the air speed under the air valve piston (5) to the point when it creates the necessary depression above the diaphragm (31) for air pressure acting on the underside of the diaphragm, to lift the air valve piston assembly a small amount. The piston ceases to rise when the air speed below the piston just maintains the depression needed above the diaphragm, for the air valve piston assembly to "float" on air pressure.

When the throttle is again moved, air speed under the air valve piston (5) and depression above the diaphragm (31) are increased as THE ENGINE SPEED INCREASES causing the air valve piston to lift until the air pressure and depression again stabilise so that the piston "floats" in a higher position.

Further movement of the throttle to its fully open position causes the air valve piston to rise by the

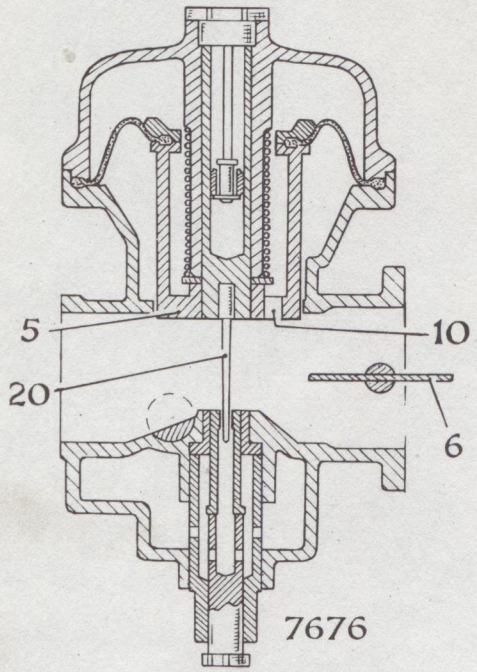

Fig. 8. *Full throttle—high engine speed operation*

same means as before, and to "float" in its maximum lift position shown in Fig. 8 IF THE ENGINE SPEED CONTINUES TO RISE.

Figs. 6, 7 and 8, show the approximate positions taken by the air valve piston (5) for part throttle opening at moderate engine speed, full throttle opening at low engine speed, and full throttle opening at high engine speed. From these illustrations it can be seen that the air valve piston position is dependent upon the amount (weight) of air that the engine can draw through the throttle opening, and that a high air speed and almost constant depression will always exist at the fuel discharge annulus where the needle enters the jet.

The air valve piston movement is also controlled slightly by the compression spring (2). This spring is identified by its colour and if replaced the new spring must be of the same colour marking.

Acceleration (See Fig. 1)

When the throttle is opened suddenly at low speeds the sudden inrush of air immediately weakens the mixture. This is overcome by damping the upward movement of the air valve piston so that there is a temporary increase of fuel discharge from the jet (26) due to the increase of depression existing on the jet, while the air valve piston movement is controlled by the hydraulic damper (33) action. When the piston reaches the position given by air pressure lift against the depression in the depression chamber, the jet (26) discharge returns to normal. Downward movement of the piston is not restricted by the action of the hydraulic damper.

STARTING THE ENGINE

From cold

Move the choke control over to the COLD position. Operate the starter. When the engine starts move the choke control over, far enough for the engine to run at a fast idling speed without stalling. As the engine warms up the choke control should be moved to the NORMAL POSITION.

Note

The choke control operates as a hand throttle for the first part of its movement. This enables a faster idling speed to be obtained when the engine is cold which is useful when manœuvring in confined spaces.

When warm or hot

When the engine is warm, operate the starter. Should the engine hesitate to start depress the accelerator pedal a short way, and release when the engine starts.

If the engine is difficult to start when hot, fully depress the accelerator while operating the starter, and release it directly the engine starts.

DIAGNOSIS OF FAULTS

The carburettor cannot function correctly if the ignition system, fuel supply, or engine condition are at fault.

Unless known to be in perfect condition the following items should be checked before making any adjustments, or concluding that the carburettor is not operating correctly.

If after making the following checks, the carburettor is proved to be faulty the possible cause, or causes, will be found under the headings "Excessive Fuel Consumption" and onwards.

Ignition system

Check spark plugs. Clean and set gaps.

Check condition and tightness of H.T. and L.T. leads.

Check condition and setting of contact breaker points, and moving contact point spring tension.

Ensure that the centrifugal and vacuum advance mechanisms are working correctly.

Fuel system

Ensure that an adequate supply of fuel is being delivered to the float chamber.

Check that the crankcase regulator valve in the inlet manifold is operating correctly. See Fig. 9, item (3).

Check that fuel pump output pressure is correct to the figures given under "Fuel System" in the Data Section of the Manual.

Examine induction manifold and carburettor flange for air leaks.

Ensure that the air cleaner is fitted correctly and not restricting the air supply of the carburettor due to the element being dirty.

Compression

Check valve clearances and compression pressures. Make sure valves are not sticking.

Exhaust system

Check that the exhaust system has not become damaged or blocked.

Excessive fuel consumption (See Fig. 1)

1. Ensure that the complaint is genuine and not caused by heavy traffic conditions or other adverse operating conditions.

2. Check that each carburettor air valve piston(5) falls freely when lifted to its full extent and then allowed to fall. Each piston should require a noticeable effort to lift it against the action of its hydraulic damper (33) and should fall with a distinct "tap" sound onto the carburettor body.

3. Check that the slow running is correctly set by raising each piston with its lifting pin one piston at a time, without opening the throttles while the engine is running. The lifting pin is shown in Fig. 2. When this is done the engine speed should fall slightly. Incorrect adjustment of the slow running on one or both carburettors will affect the whole range of fuel metering by the jet(s) and needle(s).

4. If suspect, check that the correct needles are fitted. If either needle or jet shows signs of wear they should be renewed. The needle reference designation is given in the Data Section under "Fuel System".

5. Check the entire system for fuel leaks, particularly between the float chamber and centralising bolt, and between this bolt and the jet adjustment. "O" rings (16) and (18) are used between those items.

6. Check that fuel is not flooding over from the top of the jet due to a fault or dirt in the needle valve and seat, or incorrect adjustment of the float position.

7. Check the "O" ring (24) between the jet (26) and jet bushing (25) is not missing and that it makes a good seal between these items.

8. Check that the diaphragm (31) is not damaged and that it is correctly fitted at its inner and outer edges.

Faulty slow running

1. Check that either air valve piston is not sticking and that each piston falls with a decided "tap" onto the carburettor body.
2. Check operation of crankcase regulator valve. See Section B, page 56.
3. Make sure that flooding is not occurring in either carburettor.
4. Adjust the slow running and synchronise the carburettors as described under "ADJUSTMENTS".

Insufficient top speed (See Fig. 1)

1. Check that the throttles are opening fully when the accelerator pedal is fully depressed by a person sitting in the driver's seat.
2. Check that both air valve pistons (5) move freely to the full extent of their travel, and that their needles (20) are correctly positioned in the pistons. The needle shoulder should be flush with the bottom of the piston.
3. Check condition of each diaphragm (31). If this item is defective or not fitted correctly it will allow air leakage into the depression chamber (3) and this will prevent the air valve piston and needle from rising correctly as the throttle is partly or fully opened.
4. Ensure that the correct needles are fitted, as specified in the Data Section under "Fuel System".

Flat spot at small throttle opening

1. Check that the slow running adjustment is not too weak and that the carburettors are correctly synchronised.
2. Check that the vacuum advance pipe system, and diaphragm in the distributor are free from air leaks. Should an air leak exist in the vacuum advance system the normal fuel/air mixture ratio will be weakened by extra air as the engine speed is increased from idling.

Poor acceleration

1. Check that the piston spindle bore, in which the hydraulic damper operates, is filled with an S.A.E. 20 grade engine oil.
2. After filling with 20 grade engine oil check that the air valve piston (5) offers resistance to upward movement when lifted with a finger.

Difficult starting from cold (See Fig. 2)

1. Check that choke control is moving the cam on the end of the starting shaft over the whole of its operating range, when the control is moved fully over.
2. Check that the throttle is being opened to its fast idle position when the choke control is moved over as far as possible. See "Fast idle speed for cold starting" under ADJUSTMENTS.

ADJUSTMENTS

Slow running and synchronising carburettors (See Fig. 9)

When correctly adjusted and synchronised each carburettor will provide the same amount of fuel air mixture, and when the accelerator pedal is depressed the clearance in the throttle interconnection will allow the rear carburettor throttle to open to a little before the front carburettor. This throttle "lead" occurs over the whole range of throttle movement and ensures a more progressive action as the accelerator pedal is depressed from the idling position.

When making these adjustments the following procedure should be carried out:—

1. Loosen off the clamping bolt (2) on the throttle coupling close to the front carburettor.
2. Check that shoulders of both needles (20) are flush with the lower faces of the air valves (5) (See Fig. 12).
3. Screw up each jet adjusting screw (5) until each jet just makes contact with the lower

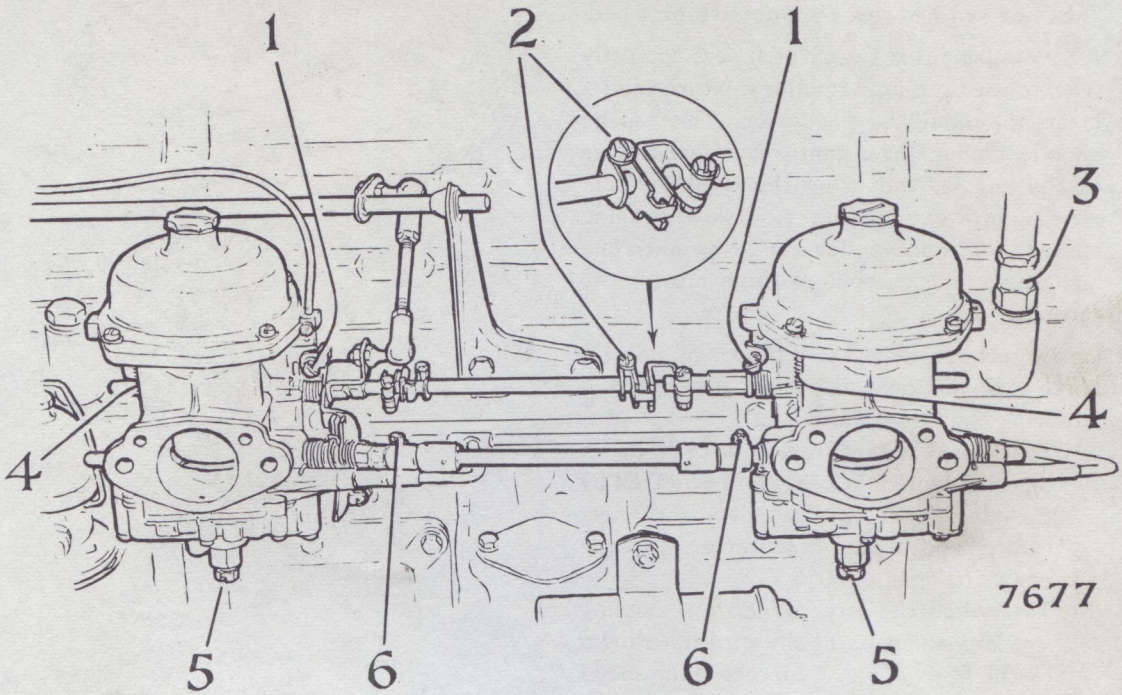

Fig. 9. *Throttle synchronisation and inset of interconnection*

side of the piston WITHOUT RAISING THE PISTON, and then screw back each adjustment three complete turns.

4. Slacken off each throttle slow running speed adjustment screw (1) until each throttle can be fully closed, and from this position adjust each screw two complete turns to open the throttles by an EQUAL amount.

5. With the throttle interconnection in the position shown in the inset of Fig. 9, tighten the clamping bolt (2) so that the rear carburettor throttle begins to open before the front carburettor throttle when the accelerator is depressed.

6. Run the engine until it reaches its proper running temperature.

7. Adjust the engine slow running mixture with the adjustments (5) so that the engine idles evenly and each slow running speed adjusting screw (1) an equal amount so that the correct idling speed is obtained. This speed is given in the Data Section under "Fuel System". Upward, or clockwise movement of the adjustment (5) weakens the mixture, and downward movement richens the mixture.

8. Check the throttle synchronisation by listening at each carburettor inlet with a suitable length of rubber hose. Each carburettor should give a similar "hiss" when the engine is idling.

   Throttle synchronisation can also be checked with a Crypton synchro-test instrument, and this method is recommended.

   If the throttle synchronisation (balance) setting is found to be incorrect by either of these tests the clamping bolt (2) on the interconnection should be slackened off and the

throttles adjusted individually so that equal "hiss" or synchro-test readings are obtained.

9. After ensuring that the throttles are correctly synchronised the slow running mixture adjustments (5) should be finally set. This can be done by connecting a multi-range tachometer to the engine, and using the 0–1000 r.p.m. scale, adjust each carburettor slow running mixture just off the rich condition until the highest r.p.m. is reached, without moving the throttle.

10. Finally recheck, or tighten, the clamp bolt (2) on the connection and ensure that the two following conditions exist:—
    (*a*) That the rear carburettor throttle opens by the full amount of travel permitted by the interconnection free movement range, before the front carburettor throttle begins to open.
    (*b*) That when the interconnection coupling free movement is in the position shown by the inset of Fig. 9 correct idling speed and even running are obtained while the throttle stop screws (1) rest against the carburettor flange.

Choke control (See Fig. 10)
The choke control securing set screw, on the cam (13) should be tightened when the choke control is about $\frac{1}{8}$ in. (3 mm.) from its normal fully back position. This ensures that the cam (13) rests against its stop when the control is moved fully over into its NORMAL position.

Fast idle speed for cold starting
This adjustment ensures that the engine runs up to a suitable speed, directly it fires, when the choke control is moved over to its maximum amount for the COLD starting condition.
The correct fast idle throttle opening clearance is given in the General Data Section under "Fuel System", and has been obtained by actual cold room starting tests. This amount of opening must be obtained when making this adjustment to overcome a complaint of difficult cold starting under adverse operating conditions.

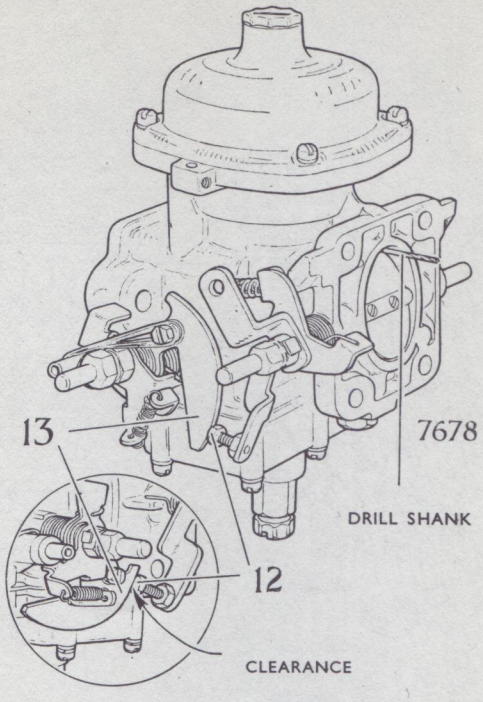

Fig. 10. *Setting throttle gap for cold starting*

Two methods of adjustment are possible and either method is carried out on the rear carburettor only, as the throttles and starter bars of both carburettors are interconnected.

Method 1 With carburettors on engine—See Fig. 10 inset.

1. Remove air cleaner and air intake to carburettors.
2. Ensure that the carburettors are properly synchronised and that the slow running is correctly set, with the choke control in its NORMAL position.
3. With the choke control in this position, adjust the bolt (12) so that there is a clearance of (·015 in.—·37 mm.) between the bolt head and cam (13) when the bolt lock nut is tightened.
4. Check, and, if necessary, adjust the interconnection between the starter bars so that each air valve piston is lifted an equal amount when the choke lever is moved into the COLD position.
5. Refit air intake and air cleaner.

Method 2—With rear carburettor removed fom engine (See Fig. 10)

1. Insert a No. 57 drill shank (·043 in. (1·1 mm.) dia.) or a wire of this diameter, or flattened to this dimension, between the throttle edge and throttle bore at right angles to the centre of the throttle spindle. Hold the throttle closed against this gauge.

2. Tie the fast idle cam in the position shown in Fig. 10 and adjust the bolt head (12) to just contact the cam (13) and then tighten the bolt locknut.

Float level (See Fig. 11)

This check or adjustment is only needed if flooding or excessive fuel consumption occur.

The highest points of the carburettor floats should be 14—15 mm. above the main body face when the carburettor is in an inverted position.

If the float level needs correction the float arm extension, that contacts the float needle, can be carefully bent. Small corrections can also be made by putting an extra washer under the needle seating.

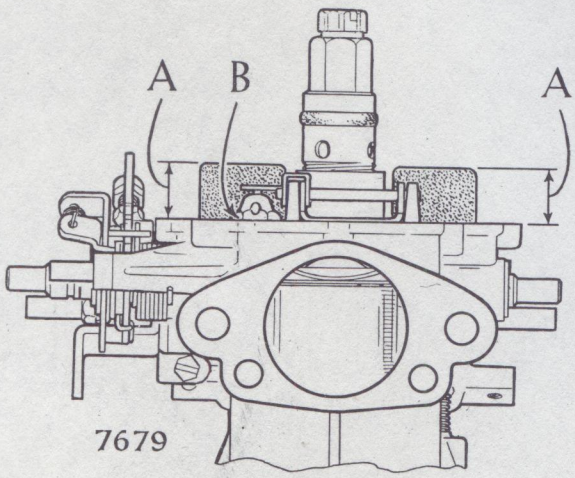

A. 14—15 MM

B. FLOAT NEEDLE AND SEAT

Fig. 11. *Float setting dimension position*

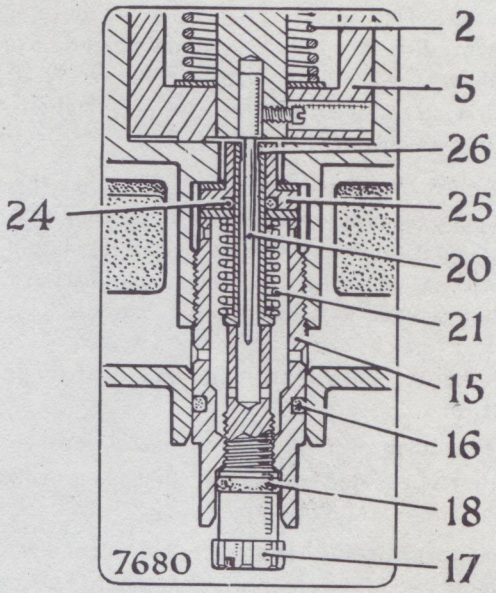

Fig. 12. *Jet centralisation detail*

Needle position (See Fig. 12)

As shown in Fig. 12 the needle (20) shoulder should be level with the air valve piston (5) lower face.

Centralising jet (See Fig. 12)

The jet is correctly centralised to the needle if the air valve piston will fall freely with a distinct "tap" onto the carburettor body when the jet is flush with its brass bushing. The jet is correctly centralised during the production assembly of the carburettor and further adjustment is not required normally.

The jet (26) will require re-centralising if it is removed for any reason, and this should be done in the following manner with the carburettor in position.

1. Check that the needle shoulder is flush with the underside of the air valve piston.
2. Slacken the jet bushing retaining screw (15) three flats (half a turn) with a $\frac{3}{4}$ in. A.F. spanner.
3. Screw up the jet adjustment screw (17) as far as possible.
4. Give the retaining screw (15) a sharp tap, with the spanner head, on one of its hexagon

sides. This assists the jet and its bushing to centralise around the needle, and usually allows the air valve piston to fall freely at the first attempt to position the jet. Tighten the jet retaining screw (15).

5. Adjust the mixture screw (17) so that the top of the jet (26) is level with its bushing (25). In this position the air valve piston (5) should fall with a distinct "tap" onto the carburettor body, when it is lifted and released.

Full throttle position and accelerator pedal position

An adjustment for setting the accelerator pedal position is provided in the lever linkage immediately behind the A.C. fuel pump.

This adjustment consists of a $\frac{1}{2}$ in. A.F. nut and washer clamping two of the lever arms together. Loosening this nut allows its stud to move in the elongated hole of the other lever so that the accelerator pedal can be set in correct relationship to the carburettor throttle operating shaft.

On cars not fitted with automatic transmission the linkage should be adjusted so that full throttle is obtained when the pedal is 1 in. (25 mm.) from the floor covering.

On cars fitted with automatic transmission this operation must be made according to the details given under ADJUSTMENTS in the applicable Automatic Transmission Workshop Manual.

SERVICING

The following information is given for general guidance. A fully exploded view is shown in Fig. 14.

Hydraulic damper

The air valve piston spindle bore in which the damper fits should be filled with S.A.E. 20 grade engine oil.

When acting correctly the hydraulic damper should cause the air valve piston to offer resistance to upward movement when lifted with a finger. On the downward movement the air valve piston should fall freely without any resistance.

If the hydraulic damper does not function correctly after cleaning out the air valve piston spindle bore, cleaning the damper and refilling with the correct grade of oil, it should be replaced.

Diaphragm—to renew (See Fig. 13)

The diaphragm (31) can be renewed without removing the carburettor(s) from the engine by removing the depression chamber cover screws and cover, lifting out the air valve piston, and removing the screws holding the diaphragm retaining ring (4) to the air valve piston.

When fitting the new diaphragm its locating tabs must locate in the locating positions provided in the carburettor body and air valve piston upper end. These positions are shown by arrowheads in Fig. 13.

The diaphragm retaining ring requires very careful replacement because it is easy to misplace the diaphragm from its correct position on the air valve piston.

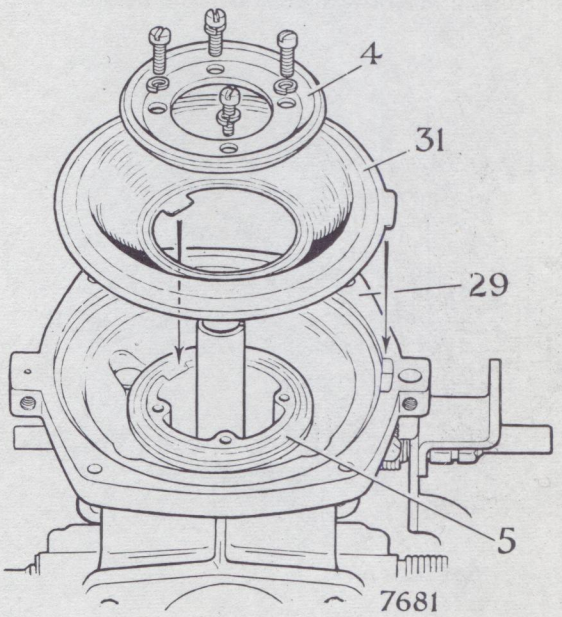

Fig. 13. *Diaphragm location*

Air valve piston return spring (See Fig. 1)

This spring (2) must not be stretched or shortened. A colour marking, given in the Data Section under "Fuel System" is used to identify the spring and only a spring of the correct colour can be used for replacement.

Dismantling for cleaning (See Fig. 1)

The following procedure can be carried out with the carburettor on or off the engine:—

1. Remove the eight screws holding the float chamber to the carburettor main body, and remove the float chamber by drawing it down the jet bushing retaining screw.
2. Remove the jet adjusting screw (17).
3. Remove the hydraulic damper (33) and the depression chamber cover (1).
4. Lift out the air valve piston, needle and diaphragm assembly.

Note

There is no need to remove the jet bush retaining screw (15) when cleaning only is required.

Cleaning

Fuel, or paraffin (kerosene), ONLY, should be used for cleaning the carburettor parts. NOTHING ELSE can be used. Certain cleaning and degreasing fluids will ruin the diaphragm and "O" rings.

The jet, and the space inside the jet bush retaining screw should be blown out with clean compressed air.

Reassembly after cleaning (See Figs. 13 and 14)

This is a reversal of the dismantling procedure. If necessary the float chamber joint (31) and "O" ring (42) should be renewed.

When refitting the diaphragm and air valve piston the locating lip on the diaphragm must fit in the corresponding locating recess in the carburettor body.

A washer (52) is fitted between the lower end of the spring (53) at its air valve piston end.

As the jet adjusting screw was removed it will be necessary to reset the slow running and check the synchronisation of the carburettors.

Removal

Unbolt air intake box and remove with air cleaner.

Disconnect fuel pipes from each carburettor.

Disconnect vacuum advance feed pipe from the front carburettor.

Disconnect choke control inner and outer cable from the rear carburettor.

Loosen off the interconnecting shaft clamp bolts (2) and (6) shown in Fig. 9.

Remove four carburettor flange fixing nuts on each carburettor. Lift off carburettors together and then draw apart from the throttle and starter bar interconnecting shafts.

Refitting

Refitting the carburettors is a reversal of the removal procedure.

After refitting, the starter bar coupling clamps should be set so that the air valve pistons are raised by an equal amount when the choke control is pulled out. Also the throttles should be synchronised and the slow running adjusted as described on page 44.

Check that the air valve spindle is full of 20 S.A.E. oil to ensure correct action of damper.

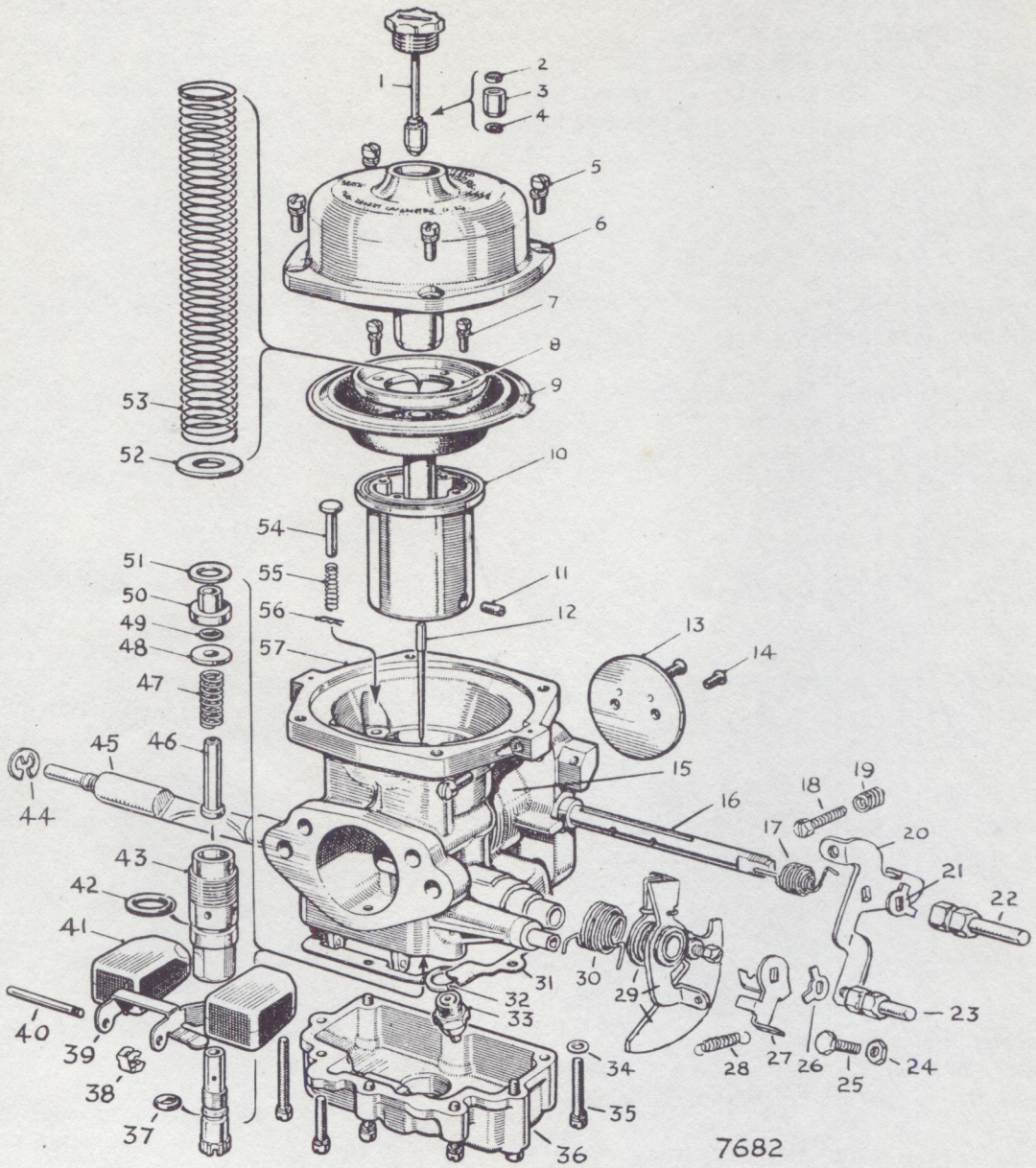

Fig. 14. *Stromberg CD carburettor—exploded view*

CARBURETTOR PARTS (See Fig. 14)

1. Damper assembly
2. Washer for damper
3. Bushing for damper
4. Retaining ring for damper
5. Screw and spring washer
6. Cover for suction chamber
7. Diaphragm retaining ring screws and spring washers
8. Retaining ring for diaphragm
9. Diaphragm
10. Air valve and shaft
11. Locking screw for metering needle
12. Metering needle
13. Throttle
14. Throttle fixing screws
15. Screw for clamping choke control wire
16. Throttle spindle
17. Throttle return spring
18. Throttle stop screw
19. Throttle stop screw spring
20. Throttle stop and fast idle lever. (Throttle lever not shown)
21. Locking washer
22. Nut for throttle lever
23. Extension nut for choke lever
24. Locknut for fast idle screw
25. Fast idle screw
26. Locking washer for starter lever
27. Choke lever
28. Spring
29. Loose lever assembly
30. Return spring
31. Gasket for float chamber
32. Washer for needle seating
33. Needle seating
34. Washer
35. Screw and spring washer (short) 3 off
    Screw and spring washer (long) 5 off
36. Float chamber
37. Screw for adjusting orifice (jet)
38. Clip for fulcrum pin
39. Float arm
40. Float fulcrum pin
41. Float and arm
42. "O" ring for bushing retaining screw
43. Bushing retaining screw
44. Retaining ring for starter bar
45. Starter bar
46. Jet orifice
47. Spring for jet orifice
48. Washer for jet "O" ring
49. "O" ring
50. Bushing for jet orifice
51. Washer for jet orifice
52. Washer for air valve return spring
53. Air valve return spring
54. Air valve lifting pin
55. Spring for air valve lifting pin
56. Clip for air valve lifting pin
57. Main body

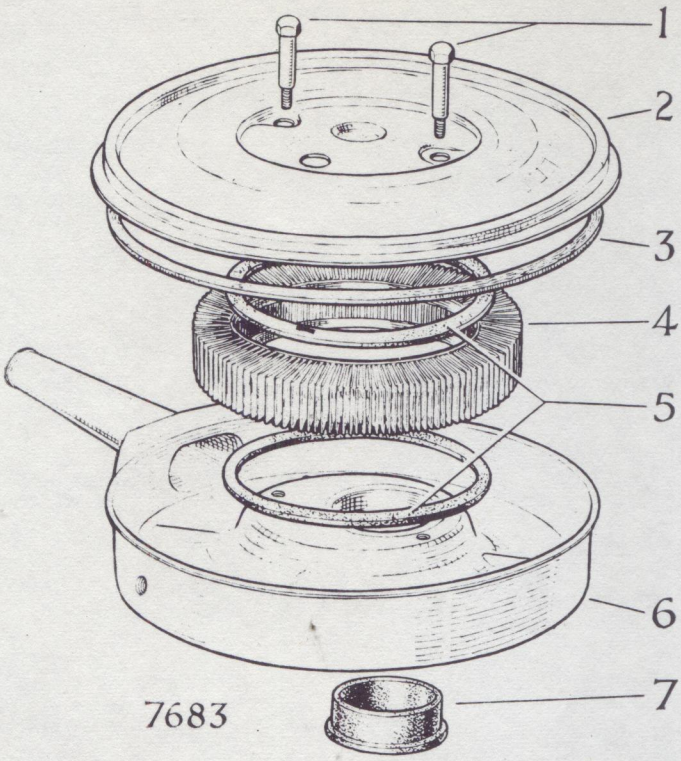

Fig. 15. *Air cleaner used with twin CD carburettors—exploded view.*

AIR CLEANER—Dry element type used with twin carburettors.

An exploded view of this air cleaner is shown in Fig. 15.

The intervals at which the filter element requires renewal are given in the Owner's Handbook. When operating under dusty conditions, or in smoke-or fog-laden atmospheres, more frequent renewal may be necessary.

The rubber bush (7) is fitted between the filter outlet and the carburettors inlet to ensure that this is a dustproof joint.

Filter element—to renew. See Fig. 15.

1. Pull the fume vent pipe out of its grommet in the air cleaner top cover (2)
2. Remove the top cover retaining bolts (1)
3. Lift off the top cover (2). The cork joint ring (3) usually remains in its locating groove in the top cover.
4. Lift element (4) out of the filter body
5. Clean out filter body (6) and top cover (2) making sure that no dust or foreign matter enters the carburettor intake.
6. Check that the cork joint ring (3) and the two rubber joint rings (5) are in good condition.
7. Place the joint rings (5) in their respective positions on the inside of the upper cover (2) and on the inside base of the filter body (6).
8. Place the filter element (4) in position and refit the top cover (2) taking care not to overtighten the two shouldered bolts (1). Refit the rubber fume vent pipe into the top cover (2)

NOTE. The filter element is used in a dry condition. It must not be oiled or cleaned in any fluid.

CLUTCH AND PROPELLER SHAFT

CONTENTS

Page

CLUTCH UNIT

—Description ... 2
—Diaphragm Clutch ... 2
—Pedal Stops
—to adjust ... 4
—Pedal helper spring ... 4
—to adjust ... 4
—to dismantle ... 5
—To remove and refit release bearing ... 8
—To remove and refit driven plate ... 8
—To dismantle and reassemble cover assembly ... 9
—Setting lever tip height ... 10
—Staking locknuts ... 11

HYDRAULIC SYSTEM

—Master cylinder ... 5
—To remove ... 6
—To dismantle ... 6
—To reassemble ... 6
—To refit ... 6
—Slave cylinder ... 7
—To remove ... 7
—To dismantle ... 7
—To reassemble ... 7
—To refit ... 8
—Bleeding the system ... 8

PROPELLER SHAFTS AND CENTRE BEARING ASSEMBLY

—To remove and refit assembly ... 12
—To remove and refit rear propeller shaft ... 12
—To remove and refit front propeller shaft ... 12
—Centre bearing—to remove from front propeller shaft ... 12
—to refit to front propeller shaft ... 12
—To dismantle and reassemble universal joints ... 14

ADDITIONAL INFORMATION ... 16

CLUTCH UNIT

Description

A 9" single dry plate type clutch is fitted incorporating a copper impregnated graphite (MY3D) release bearing which is self-lubricating. No attention in the way of lubrication to the release bearing is necessary.

Series I, II and III cars (*Fig.* 1)

The cover assembly consists of a pressed steel cover (1) and a cast iron pressure plate (2) loaded by thrust springs (3). Mounted on the pressure plate are release levers (6) which pivot on floating pins (9) retained by eyebolts (11). Adjustment nuts (7) are screwed on to the eyebolts and secured by staking. Struts (10) are interposed between lugs on the pressure plate and the outer end of the release levers. Anti-rattle springs (8) restrain the release levers, and retainer springs (5) connect the release lever plate (4) to the levers.

Diaphragm Clutch

Series IV cars onwards (*Fig.* 2)

The cover assembly consists of a pressed steel cover (1) a cast iron pressure plate (3) and a steel diaphragm spring (6). Three sets of spring steel straps (9) each riveted at one end to the cover and bolted at the other end to the pressure plate, transmit the torque. The diaphragm spring (6) is pinched between two fulcrum rings (7) which are secured to the cover by special rivets (2). A release plate assembly (4), is clipped to the open centre of the diaphragm spring by a circlip (5). On later models the release plate is secured to the cover by three straps and cannot be dismantled. Under no circumstances must the clutch be lifted or pulled by means of the thrust plate or the straps will be bent and the alignment of the the thrust plate destroyed. Finally three retractor clips (8) bolted to the pressure plates, clip over the rim of the diaphragm spring to ensure that the pressure plate retracts during clutch disengagement.

When the cover assembly and driven plate is bolted to the flywheel, the diaphragm spring comes under installation load and deflects from its free shallow coned profile to an approximately flattened condition, this deflection, via the outer fulcrum ring provides the load on the pressure plate. Pressure on the release plate will further deflect the diaphragm spring, retracting the periphery due to leverage about the inner fulcrum ring. This action results in the diaphragm spring load being relieved from the pressure plate, thus disengaging the clutch.

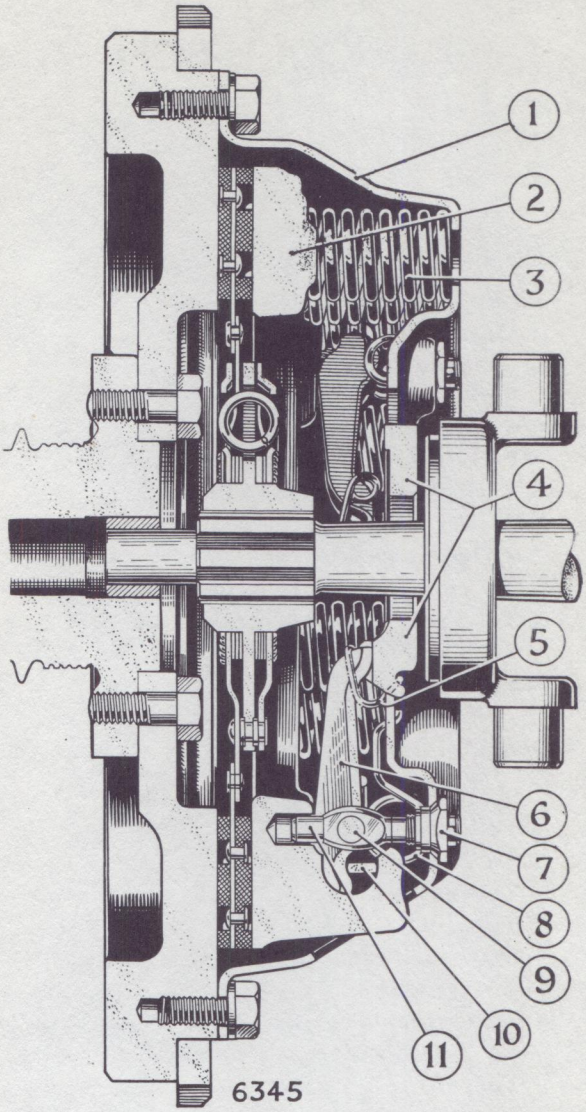

Fig. 1. *General arrangement of clutch Series I, II and III)*

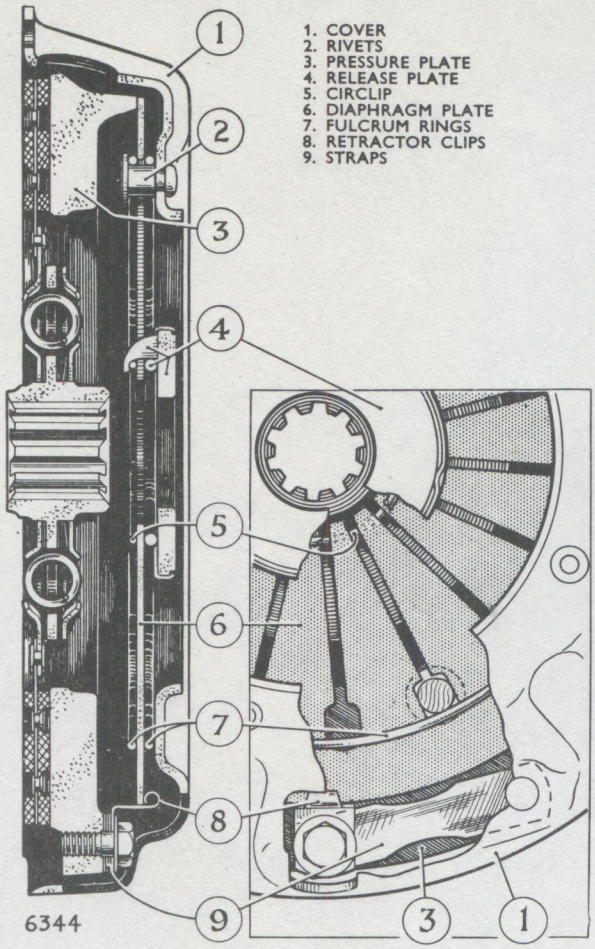

Fig. 2. *Arrangement of clutch (Series IV) onwards*

Cover Assembly (*Diaphragm Clutch*)

Series V cars onward

Some models have the release plate secured by three straps. On certain models these straps are deleted.

With both types no servicing is recommended, and if necessary, the complete clutch unit must be replaced.

Where the release plate assembly is retained by a circlip it may be replaced as follows:

Remove the old release plate by turning back the release plate housing tags and removing the circlip.

Fit the replacement assembly in position on the diaphragm spring (A, Fig. 3), replace the circlip (B) under the six tags (C), and lightly set the tags to secure the circlip taking care to keep the tags square with the base (see D, Fig. 3). Never refit a removed release plate as turning back the housing tags to free the circlip stresses them beyond further service.

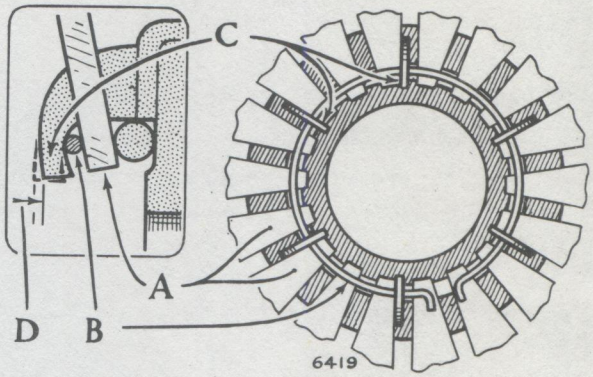

Fig. 3. *Fitting release plate assembly*

WITHDRAWAL MECHANISM

Hydraulic withdrawal mechanism is employed, consisting of a master cylinder directly connected to the pedal (Fig. 6), and a hydraulic fluid pipe running to the operating cylinder, which in turn is attached by a rod to the withdrawal lever. A booster spring is fitted in the pedal linkage of Series I, II and III cars in order to reduce pedal effort.

Provision for bleeding the system is made on the operating cylinder. (See item 36, Fig. 6.)

There is no adjustment in the pedal linkage, which is self-adjusting.

The pedal stop rubber buffer and on Series I, II and III cars the pedal helper spring mechanism may need periodical adjustment however, and these procedures are described overleaf.

PEDAL STOPS (Fig. 4)

Description

These consist of adjustable rubber buffers (28) fitted one into each end of a bracket clamped to the steering column. The pedals rest against the buffers when released.

To adjust

1. Screw back the rubber buffer to allow the pedal to return against its stop in the master cylinder.
2. Screw down the rubber buffer so that it touches the pedal without compressing the rubber.
3. Screw down the buffer one complete turn in the direction of the arrow "A".
4. Secure with the locknut.
5. Check that pedal free movement remains but does not exceed $\frac{1}{4}$ in. (6 mm.). Re-adjust if necessary.

Important: Should the pedal pad be removed from the pedal for any reason, it must be replaced in the following manner:—

Assemble *internal* toothed washer to bolt. Insert bolt through the lug in the pad.

Fit *external* toothed washer to the bolt. Screw the bolt into the pedal, set the pad to the required angle, and tighten.

CLUTCH PEDAL HELPER SPRING (Fig. 4)

Series I, II and III cars

Description

The spring (2) exerts pressure via the cups against the yoke end of rod (6) and against the trunnion (5) which is free to slide on the rod (6) but is located in the intermediate hole in each shackle plate (3).

The shackle plates are, in turn, located in the bracket (11) by the pedal pivot pin (12) and held by the adjustable tie rod (1), which is attached to the flange below the facia panel.

The tie rod (1) is adjusted to position the shackle plates in such a way that a line (CD) drawn through the centres of the shackle holes is slightly below the centre of the fixed pin (4) on the pedal lug. The spring then bears on the yoke and fixed pin in the pedal lug, to hold the pedal against the rubber buffer when not in use.

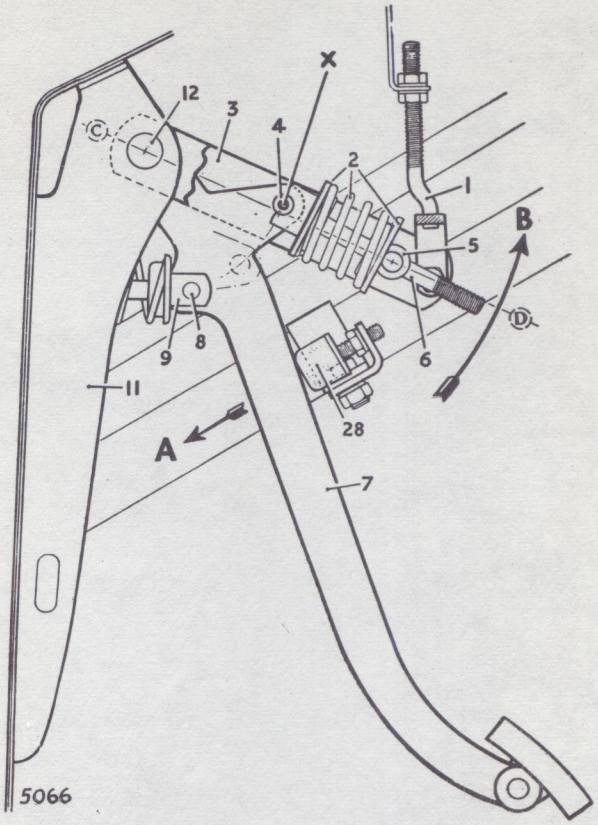

Fig. 4. *Pedal Linkage in section (Series I, II and III cars)*

On depressing the pedal to disengage the clutch, the fixed pin (4) is moved below the axis of the shackle plate holes, allowing the spring to assist the pedal in its downward movement.

To adjust

The pedal stop must be adjusted before the helper spring.

Adjust the inclination of the shackles (3) by means of the two locknuts at the mounting of the tie rod (1) to the flange below the facia panel as follows:—

Adjust in direction of arrow (B), Fig. 4, until a point is reached at which the pedal, when depressed, fails to return fully to the rubber stop. Adjust in the reverse direction by the MINIMUM amount necessary to allow full return of pedal. Tighten the locknuts.

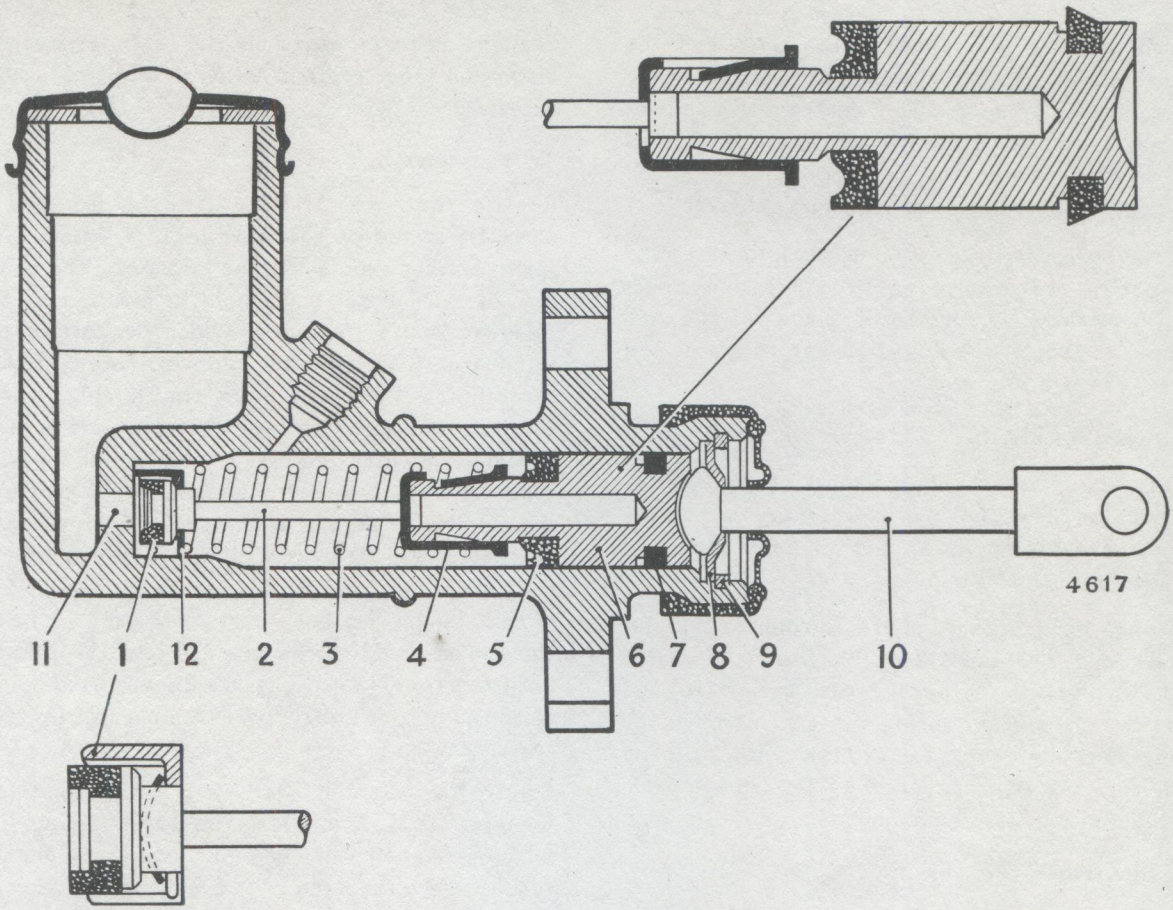

Fig. 5. *Master cylinder, sectional view*

Commencing at Chassis No. A.8905153 a $\frac{3}{16}$ in. (4·76 mm.) hole is added in the left-hand shackle plate to ensure that the helper spring mechanism is in correct adjustment.

With the pedal in the full "OFF" position against its rubber stop, and by means of the tie-rod fixing nuts, adjust the helper spring shackle until hole "X" in the left-hand shackle plate is in alignment with the hole in the end of the pedal lug pin. When a dowel pin can be inserted through the shackle plate and into the clutch pedal lug, then the helper spring mechanism is in correct adjustment. Tighten the locknuts.

To dismantle

If attention involving dismantling is needed, a slave nut should be screwed on to the threaded end of the rod (6), before disconnecting the linkage.

MASTER CYLINDER

Description (Fig. 5.)

The fluid reservoir is cast integrally with the cylinder body, and is connected with it by a hole opening into the centre of the end of the pressure cylinder. The face is machined to seat the small centre valve seal.

When pressure is applied to the push rod the plunger with its seal moves down the polished bore of the cylinder. The centre valve moves initially by a spring on to its seating and is retained by the fluid whilst the pressure is transmitted through the pipe-line to the withdrawal lever.

On the return of the plunger to its fully retracted position the centre valve is positively retained off its seating by the action of items 2, 3 and 4, Fig. 5, and free movement of the fluid between reservoir and pipeline is assured.

To remove (Fig. 6)

It should be noted that removal of the master cylinder on Series I, II and III cars leaves the helper spring linkage in operation, and the pedal should be handled with this in mind.

Disconnect the pressure pipe (27) from the cylinder barrel, and the clevis pin (8), from the clutch pedal. Compress the pedal return spring (10) and slide out the slotted spring cup (9). Remove the fixing bolts and detach the cylinder with push rod and flange spacer. Unscrew the filler cap and drain the fluid into a clean container.

To dismantle (Fig. 5)

Pull back the rubber dust cover and remove the circlip (9) with a pair of long nosed pliers. The push rod and dished washer can then be removed. When the push rod has been removed the plunger (6) with seals attached will then be exposed.

Remove the plunger assembly complete. The assembly can then be separated by lifting the thimble leaf (4) over the shouldered end of the plunger. The seals should be eased off the plunger.

Depress the plunger return spring, allowing the valve stem (2) to slide through the elongated hole of thimble (4), thus releasing the tension of the spring. Remove thimble, spring and valve complete.

Detach the valve spacer, taking care of the spacer spring washer which is located under the valve head (1, inset). Remove the seal from the valve head.

Examine all parts, especially the seals, for wear or distortion and replace with new parts where necessary.

To reassemble

Replace the valve seal so that the flat side is correctly seated on the valve head (1, inset). The spring washer should then be located on the under side of valve head, being held in position by the valve spacer (1), the legs of which face towards the valve seal. Replace the plunger return spring centrally on the spacer, insert the thimble (4) into the spring and depress until the valve stem engages through the elongated hole of the thimble, making sure the stem is correctly located in the centre of the thimble. Check that the spring is still central on the spacer. Refit new plunger front seal on to the plunger with flat of seal seated against the face of the plunger. Fit a new rear seal as shown. Insert the reduced end of the plunger into the thimble until the thimble leaf engages under the shoulder of the plunger. Press home thimble leaf (4). See also inset.

Smear the assembly well with brake fluid (see General Data), and insert the assembly into the bore of cylinder, valve end first, easing the plunger seal lips in to the bore. Replace the push rod, with the dished side of washer under the spherical head, into the cylinder followed by the circlip which engages into groove machined in cylinder body.

Replace the rubber dust cover.

Fill the reservoir with clean brake fluid and test the master cylinder by pushing the piston inwards and allowing it to return unassisted; after a few applications, fluid should flow from the outlet connection.

To refit

Attach the master cylinder with flange spacer to the bulkhead. Fit the pedal return spring over the push rod, compress the spring and slide in the slotted spring cup. Fill with fluid, bleed the system and check for leakage by applying a firm pressure to the pedal and inspecting the "line" and connections.

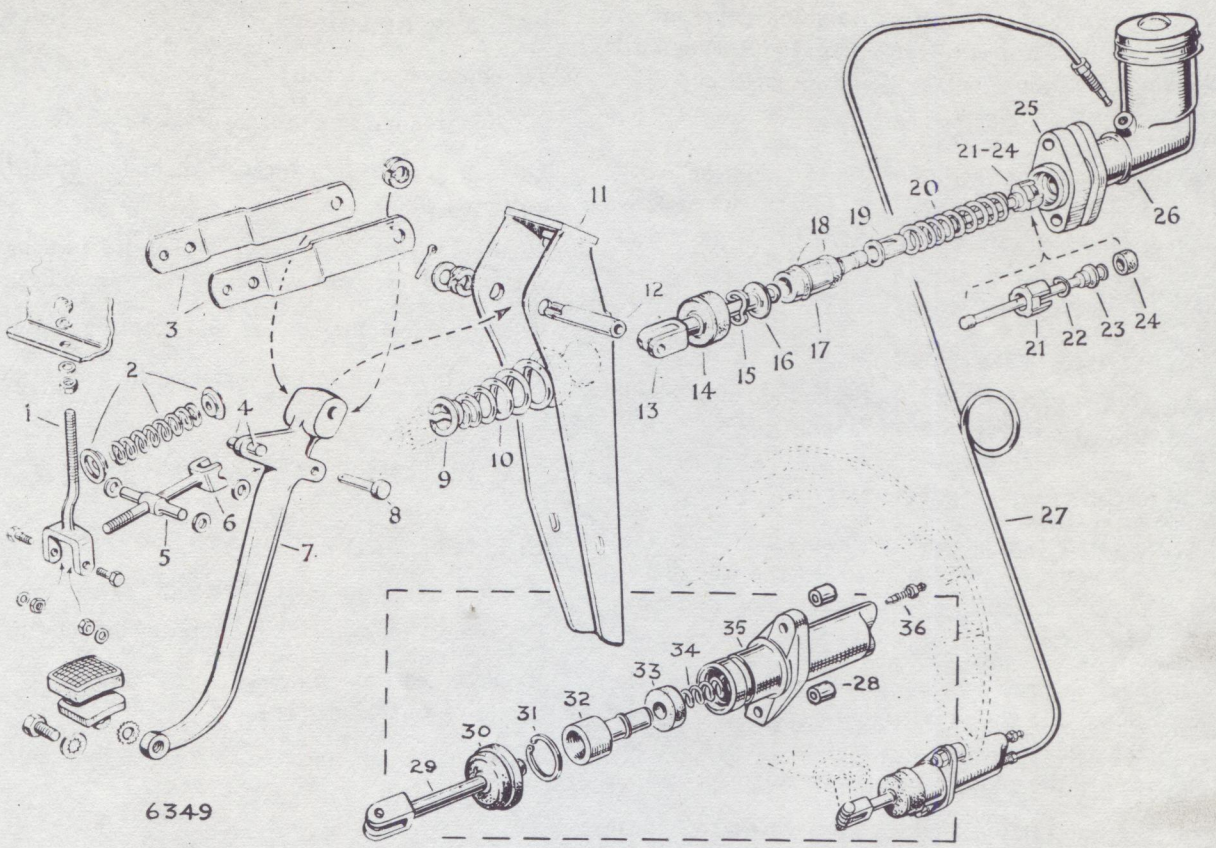

Fig. 6. *Exploded view—Master cylinder, slave cylinder and pedal linkages*

SLAVE CYLINDER (Fig. 6)

Description

The slave or operating cylinder works on similar principles to the hydraulic brake wheel cylinder and consists of the following parts:—

A main body or cylinder assembly inside which operate a piston (32) with cup seal (33) and spring (34). This assembly is retained in the cylinder by a circlip (31) and is connected to the withdrawal lever by an operating rod (29), incorporating a rubber dust cover (30) which, in turn, fits around a groove in the cylinder.

A bleeder screw (36) provides the only means of bleeding the hydraulic system.

To remove

Disconnect the pipe (27) and remove the slave cylinder fixing screws and packing pieces. The push rod (29) and dust cover (30) may be left attached to the car.

To dismantle

Remove the circlip (31) from the bore and apply a LOW air pressure to the fluid connection to expel the internal parts.

To assemble

Fit the cup (33) over the shank of the piston (32) with flat side of cup adjacent to piston shoulder.

Fit the spring (34) against its flange on the shank of the piston. Fit piston with cup and spring into cylinder. Compress piston and insert circlip (31).

To refit

Offer up the slave cylinder to its mounting, with the push rod entering the bore and fit the packing pieces and fixing screws. Stretch the large end of the boot on to the body.

Bleed the system.

BLEEDING THE SYSTEM

1. Fill the supply tank with brake fluid and keep it at least a quarter full throughout the operation. If this is not done, air will be drawn in, necessitating a fresh start.
2. Attach a rubber tube to the bleeder screw (36) on the slave cylinder, allowing the free end to be submerged in a little brake fluid in a clean glass jar.
3. Slacken the bleeder screw and depress the clutch pedal slowly; tighten the screw before the pedal reaches the end of its stroke and return the pedal by hand to its original position.
4. Repeat (3) until air bubbles cease to appear from the end of the tube in the jar.

RELEASE BEARING

To remove and refit

Disconnect pipe to clutch operating cylinder.

Remove gearbox complete with bell housing (See Section E of this manual).

Remove spring clips securing release bearing to withdrawal lever and withdraw the release bearing.

When reassembling always renew spring clips.

Reassembly is a direct reversal of the above operations.

Bleed the hydraulic system after refitting pipe.

CLUTCH DRIVEN PLATE

To remove and refit (See Fig. 7)

Disconnect pipe to clutch operating cylinder.

Remove gearbox complete with bell housing (See Section E of this manual).

Mark position of clutch in relation to flywheel.

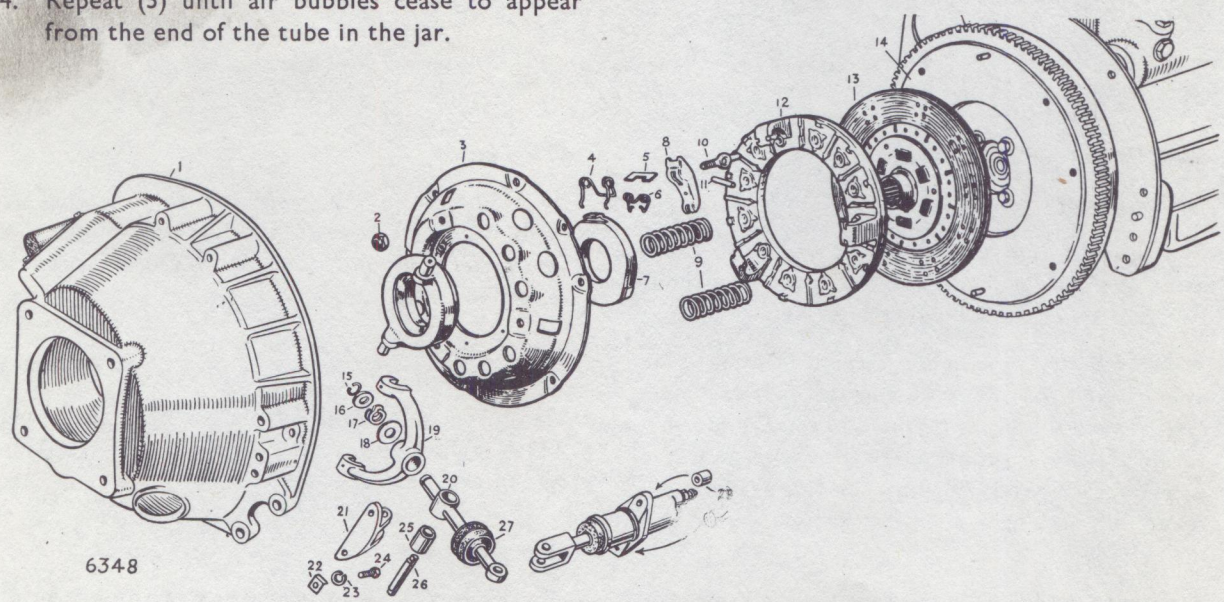

Fig. 7. *Exploded view—clutch components (Series I, II and III cars)*

Remove setscrews securing clutch cover to flywheel. It is important that these should be slackened off evenly in order to prevent undue strain being applied to the cover at any one point. Remove clutch assembly together with driven plate.

It is essential that the driven plate hub internal splines should not be assembled dry. A small amount of waterproof grease should be applied to these splines on a new driven plate. Shell S.B.2498 is suitable for this purpose.

Place driven plate in position with a suitable mandrel fitted through the hub of the plate, so that it may be located correctly when the clutch cover is fitted. **The smaller boss of the driven plate hub faces towards the flywheel.**

Enter clutch cover on dowels. Tighten the six securing setscrews evenly.

Refit gearbox, complete with bell housing (see Section E of this manual).

Bleed hydraulic system at operating cylinder.

On a replacement clutch assembly there are three small L-shaped "keepers" between the release levers and the clutch cover, painted red and fitted to enable a clutch unit to be fitted to a flywheel without compressing the springs into position by means of fixing bolts. **The L-shaped pieces should be removed as the fixing bolts are finally tightened. Do not allow them to fall into the clutch cover.**

Cover Assembly
Series I, II and III cars

Dismantling of the "A" type cover assembly as fitted to Series I, II and III cars is not recommended and where possible an exchange unit should be fitted. If dismantling and adjusting is unavoidable, use of the Churchill Clutch Servicing Equipment, 99A, is advised.

To dismantle

Remove gearbox complete with bell housing. Remove clutch assembly from flywheel.

Before dismantling mark all the major components to ensure they are re-assembled in order to retain the original balance of the assembly.

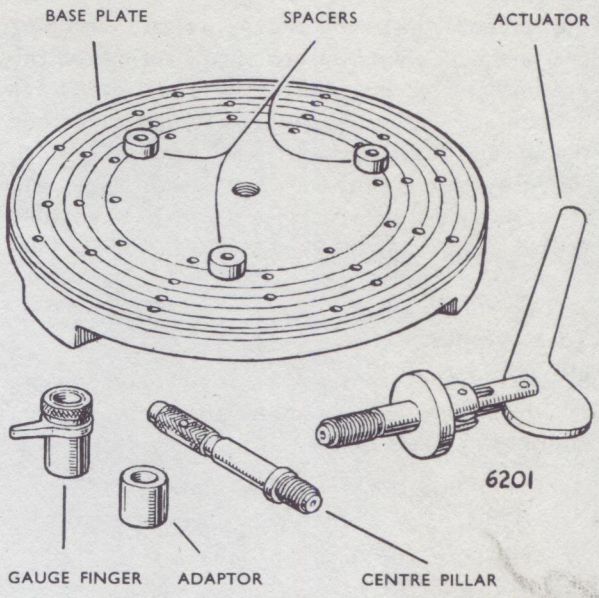

Fig. 8. *Clutch Servicing Equipment, 99A*

To dismantle clutch, either bolt the assembly to the base plate of the Churchill fixture with the correct spacers in position and using the actuator to clamp the unit, or to a spare flywheel, or place the part on the bed of a press with blocks under the pressure plate in such a manner that the cover is free to move downward when pressure is applied. (Fig. 9).

Having compressed clutch in one of these various ways, unscrew the nuts (considerable torque is initially necessary due to the staking of the nut into

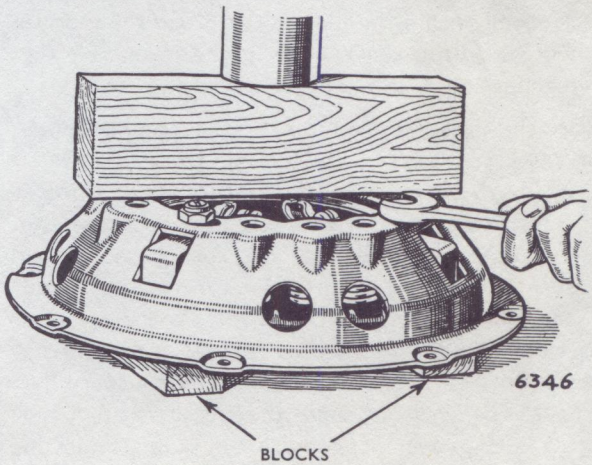

Fig. 9. *Clamping clutch using press*

the eyebolt slot), and slowly release clamping pressure. Lift the cover and thrust springs off the pressure plate and remove the release lever mechanism. Fig. 10 shows the method whereby the strut is disengaged from the lever after which the threaded end of the eyebolt and the inner end of the lever are held as close together as possible to enable the shank of the eyebolt to clear the hole in the pressure plate.

To assemble

Before assembling ensure the original components are identified for assembly to their original positions. Always renew the adjusting nuts.

Points of lubrication during assembly:—

Cover	—Eyebolt nut seats
Release Lever Pins	—Total length
Struts	—Contact edges
Release Lever Plate	-Release lever lands

The above items to be lightly smeared with Shell SB 2498 grease.

Fit a pin into the eyebolt and locate the bolt within the release lever. Hold the threaded end of the eyebolt and the inner end of the lever as close together as possible and with the other hand engage the strut within the slots in a lug on the pressure plate, with the other end of the strut, push outwards towards the periphery of the plate.

Offer up the lever assembly, first engaging the eyebolt shank within the hole in the plate; then locate the strut within the groove in the lever. Fit the remaining levers in the same way.

Place the pressure plate on the spacers positioned on the base plate of the Churchill fixture or on a spare flywheel, or on blocks on the bed of a press, and position the thrust springs on the bosses on the plate. Having arranged all the springs, and after ensuring that the anti-rattle springs are fixed within the cover, rest the cover on the springs, carefully aligning the pressure plate lugs with the cover slots. If the Churchill fixture or a spare flywheel is being used, move the clutch to align the holes in the cover flange with the tapped holes in the flywheel or base plate and then clamp the cover

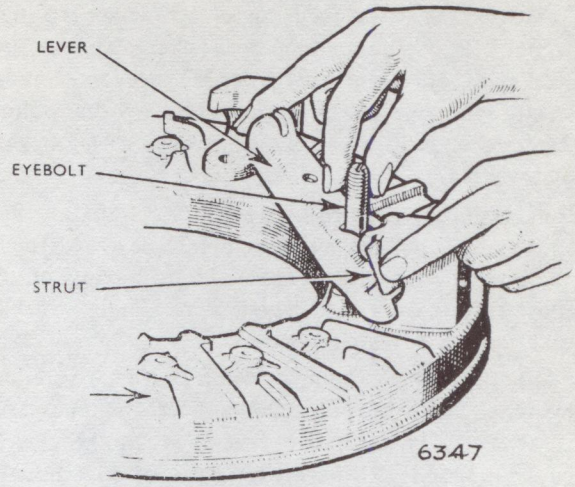

Fig. 10. *Method of removing and refitting release levers*

down evenly, to avoid distortion, with the fixing screws. If a press is being used, arrange a block across the cover and compress the assembly Screw new adjusting nuts onto the eyebolts until they are flush. The release levers must now be set to the correct height as follows:—

Adjusting the release lever height

Using 99A Equipment

With the No. 3 spacers in the correct position on the base plate and the assembly firmly bolted to the base. Screw in the actuator and operate the levers about a dozen times to settle the release mechanism. Remove the actuator.

Screw the centre pillar firmly into the base and place over it adaptor No. 7, recessed face down. Fit the gauge finger.

Holding the gauge finger firmly in contact with the adaptor, turn the adjusting nuts until the release levers make contact with the finger. Remove the gauge finger, adaptor and pillar, fit the actuator and again operate the levers. Replace the pillar, adaptor and finger, and check the lever setting, making any necessary adjustments. Finally, stake the adjusting nuts by peening the collar of each nut into the eyebolt slot. Fit the release lever plate.

Alternative Methods

The methods described below are not highly accurate and should only be used when the Churchill fixture is not available.

Using a new driven plate, clamp the clutch assembly to a flat surface having a hole large enough to take the protruding boss of the driven plate, until the clutch cover makes firm even contact with the flat surface.

Using a suitable gauge, the height of the lever tips from the surface plate should be adjusted to 1·895 in. (48·13 mm.).

Alternatively, remove the flywheel from the engine (or use a spare flywheel) and lay flat on a surface plate. Using a scribing block measure the height of the flywheel face from the surface plate then set the scribing block pointer to a dimension 1·895 in. (48·13 mm.) higher than this reading. Lay a new clutch driven plate in its correct position on the flywheel. Bolt the cover assembly to the flywheel and with the scribing block adjust the release levers until the pointer makes contact with the tips.

Release the cover assembly clamping bolts, turn the driven plate 90°, reclamp the cover and recheck the lever tip height. Fit the release lever plate, check that it is level and stake the adjusting nuts.

Finally, recheck to ensure that the adjustment has not been disturbed.

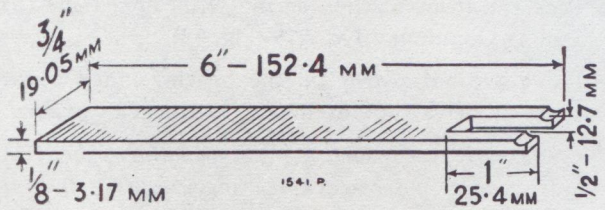

Fig. 11. *Suggested tool for fitting release lever plate retaining clips*

Fitting the release lever plate retaining clips is greatly facilitated by the use of a simple tool as illustrated in Fig. 11, *and shown in Fig.* 12.

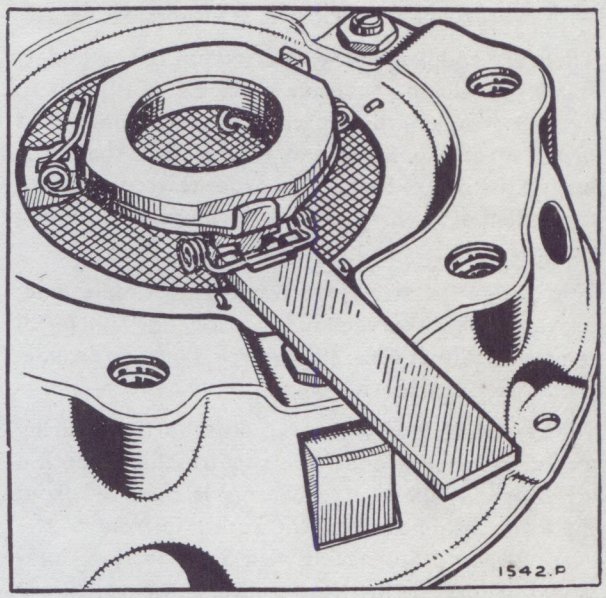

Fig. 12. *Fitting release lever plate retainer clips*

STAKING LOCKNUTS

To provide for variation in manufacture an individual adjustment is provided for locating each release lever, but the adjusting nut is positively locked by staking, and should never be disturbed unless the clutch is dismantled for replacement of parts.

The method of locking the nuts should be done by staking the top of the nut into the slot provided in the eyebolt. Use a blunt cross cut chisel and give a light angular blow just sufficient to ensure that metal is peened into the slot, preventing the nut from turning. Restaking used nuts may not give a satisfactory lock, for this reason it is advisable to use new nuts and eyebolts. (Nuts are obtainable separately from the Factory.)

PROPELLER SHAFTS

Description

Two Hardy Spicer needle roller bearing propeller shafts are fitted, the front one of which is supplied in 3 different lengths for standard gearbox, gearbox with overdrive and automatic transmission.

These are coupled at the mid-section of the under-frame tunnel and provision is made at this point to house a steadying bearing. A telescopic portion is provided at the front end of the rear shaft just behind the centre bearing, in order to accommodate movement of the back axle when the car is travelling on the road.

The design is straightforward and simple and, provided that correct lubrication for universal joints and splines is carefully carried out, no trouble should be experienced.

The centre bearing is packed with lubricant during manufacture, and does not require this attention in service. If the centre bearing is removed from the front shaft however, the recess in front of the bearing should be packed with Shell Sealing Compound before fitting the conical water excluder (Fig. 14) during reassembly.

PROPELLER SHAFT ASSEMBLY COMPLETE

To remove and refit

Whilst the two shafts and centre bearing can be removed as a complete assembly, it is recommended that the rear propeller shaft is removed first, unless the services of an assistant are available during removal.

REAR PROPELLER SHAFT

To remove and refit (Fig. 13)

Disconnect front coupling (3) just to the rear of the centre bearing.

Disconnect rear coupling (1) from rear axle driver coupling. Telescope the shaft on its forward splines and withdraw it from under the car.

Reverse this procedure for refitting.

FRONT PROPELLER SHAFT AND CENTRE BEARING ASSEMBLY

To remove and refit (Fig. 13)

Remove rear shaft as previously described.

Disconnect front coupling (15) from gearbox driver coupling.

Remove centre bearing lower mounting bracket (12).

Withdraw shaft, bearing and housing complete.

Reverse procedure for refitting. *On early type mounting (inset A, Fig. 13) ensure that the centre mounting rubber (11) is fully located before tightening the lower mounting bracket. On the later type mountings (B and C) ensure that the two bearing rubbers (11) are not twisted.*

The propeller shafts must be bolted together with all flange holes in line.

CENTRE BEARING ASSEMBLY

To remove from Front Propeller Shaft (Fig. 13)

Mount the front shaft in a vice, remove nut (4), withdraw rear coupling flange (6).

On the early type mounting (A) remove the mounting rubber (11) from the bearing housing (10).

On the later type mountings (B and C) remove the two bearing rubbers (11).

Withdraw bearing from shaft journal (note water and dust excluders (13, 7) at front and rear ends of bearing respectively.

To refit to Front Propeller Shaft (Figs. 13 and 14)

Fit water excluder (13) to shaft journal.

Pack the front of the bearing with Shell Asbestos Sealing Compound No. 219 (Fig. 14).

Using a tubular drift on the bearing inner track, press or drive the bearing on to the shaft journal.

On the early type mounting (A) fit mounting rubber (11) over bearing outer track housing, ensuring that it locates between the two flanges of the housing (10).

Fit dust excluder (7).

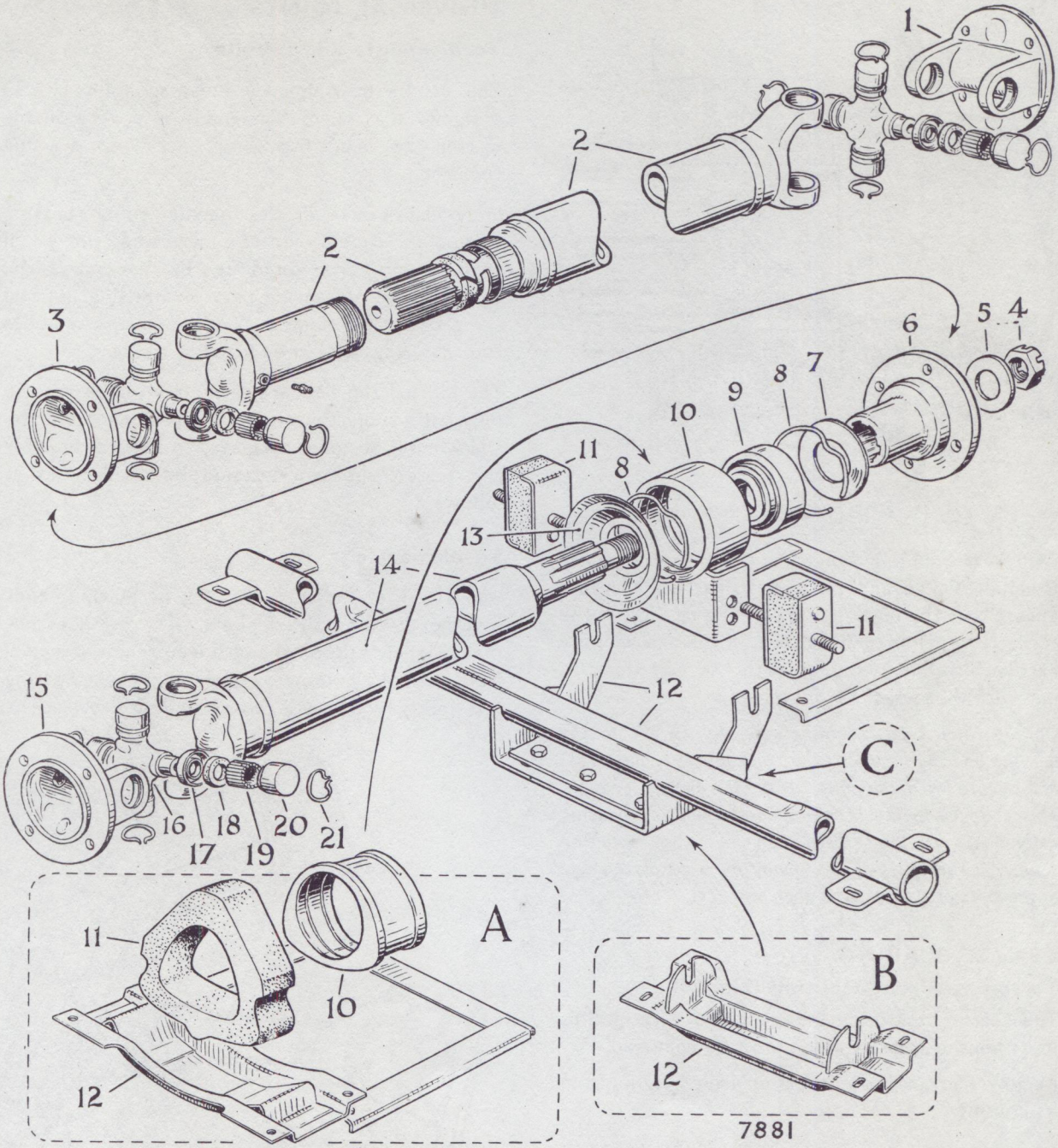

INSET A—CENTRE BEARING AND SUPPORT BRACKET, SERIES I AND EARLY SERIES II CARS
INSET B—SUPPORT BRACKET, LATE SERIES II AND SERIES III CARS
INSET C—SUPPORT BRACKET, SERIES IV CARS

Fig. 13. *Propeller shafts showing components*

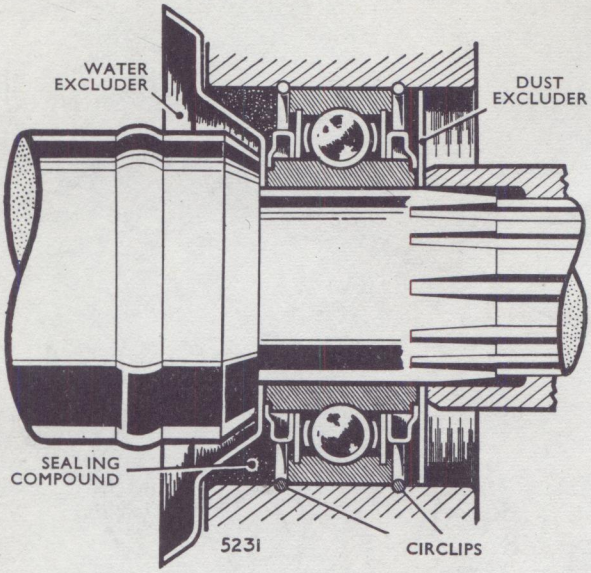

Fig. 14. *Section through centre bearing*

Refit rear coupling flange on the correct splines. Coupling flange and propeller shaft are marked. Ensure that the markings are in line to achieve the correct propeller shaft balance. If the arrows have become illegible, assemble with the bolt holes in line with those of the front flange.

On the later type mountings (B and C), fit to the bearing housing assembly the two support rubbers (11) *and secure with the nuts. Note the dowel location. This engages in the brackets on the bearing housing assembly. Fit the crossmember to the mounting rubbers. The studs of the mounting brackets engage in the slots of the crossmember brackets.*

CENTRE BEARING

To remove from Housing (Fig. 14)

The bearing is located between two wire circlips in its housing, one of which must be removed.

Remove one circlip and press or drive bearing from its housing.

To refit

With one circlip in place, drive bearing into position centrally in the housing until the outer track face abuts the circlip. Fit second circlip.

UNIVERSAL JOINTS

To dismantle and rebuild

The needle bearing type universal joints are so designed that correct assembly is a very simple matter, no hand fitting or special tools being required.

Individual parts of the needle roller bearing assemblies should not be renewed singly. If replacements are found to be necessary, the complete set of bearing parts comprising: journal c/w gaskets and retainers, needle bearing assemblies and snap rings should be fitted.

The journal and needle bearing assemblies are the only parts subject to wear after prolonged service, and when it becomes necessary to replace these for any reason the work should be carried out as follows.

To dismantle

Remove snap rings (21), Fig. 13, by pinching ends together with a pair of pliers. If a ring does not readily snap out of the groove, remove enamel from the yoke holes and tap the end of the bearing cup lightly, which will relieve pressure against the ring.

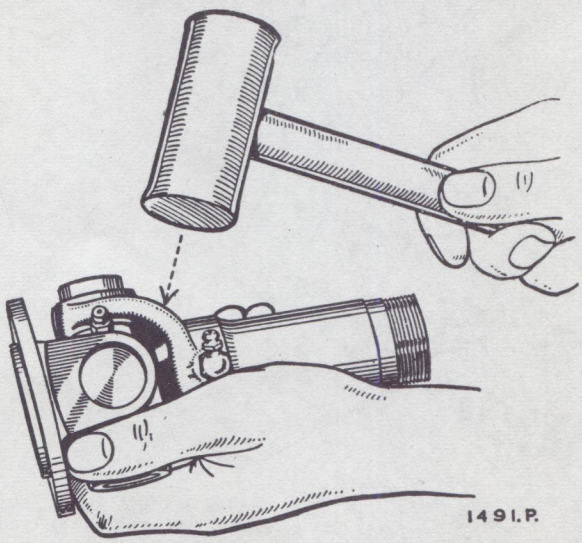

Fig. 15. *To extract bearing after removal of snap ring, tap on ears of yoke with copper hammer*

Holding the joint in one hand, tap gently with a piece of copper or copper hammer on the radius of the ear of the yoke, as shown in Fig. 15.

The needle bearing will gradually emerge and can finally be removed with the fingers. Be sure to hold the bearing in a vertical position and when free remove race from the bottom side so as to avoid dropping the needle rollers (see Fig. 16).

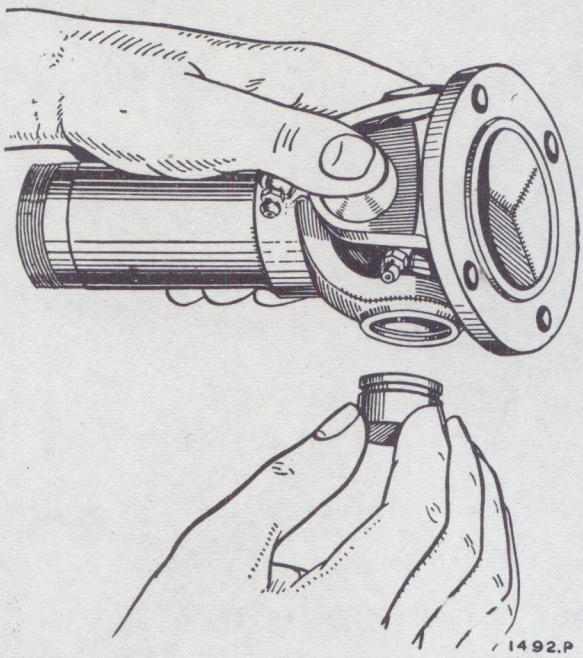

Fig. 16. *Hold bearing in a vertical position when removing and replacing so that the needle bearings are not displaced*

Repeat this operation for the opposite bearing.

Support the two exposed journal pegs on lead blocks (to protect ground surface) and tap the ears of the flange yoke to remove the race.

Reverse assembly and repeat the operation. Wash all parts in petrol or paraffin.

If parts are not worn, repack with Shell Retinax "A". Make sure that the journal oil channels are filled with lubricant. With the rollers in position fill the race about one-third full. Should any difficulty be encountered when assembling the rollers in the housing, smear the wall of the race with grease. Install the new gaskets and gasket retainers (18 and 17, Fig. 13) on the journal assembly (16).

The journal shoulders should be coated with shellac or other suitable jointing prior to fitting retainers so as to ensure a good oil seal. It is also useful to have spare snap rings (21) available as replacements in the event of damaging a ring in assembling the joint.

Note

On later models, the only greaser is on the sliding spline. *Do not* remove the Allen screws and fit greasers, or the seals will be damaged.

To reassemble

Insert journal in flange yoke holes.

Using a soft, round drift with flat face, about $\frac{1}{32}$ in. (·79 mm.) smaller in diameter than the hole in the yoke, tap the bearing into position.

Repeat this operation for the other three bearings.

Fit new snap rings and be sure that these are firmly located in the grooves.

When assembled, if joint appears to bind, tap the lugs lightly with a wooden mallet, which will relieve pressure of the bearing on the end of the journal. It is essential that no play exists between the roller races and the bores of the yokes. If the yoke cross holes are worn oval, the yokes must be renewed. In the case of the rear yoke of the rear shaft or the front yoke of the front shaft, renewal can only be effected by fitting a new tubular shaft assembly, since the yoke is welded to and balanced with the tubular shaft. Similar remarks apply in the event of wear on the splined stub shaft.

ADDITIONAL INFORMATION

Manual gearbox only

Transmission judder

If judder is experienced when driving off from rest, after the clutch has been fully engaged, fit packing pieces between the engine rear mounting cross-member and the chassis. This will require the use of longer bolts. The packing pieces and bolts may be obtained from Rootes (Parts), Birmingham, under the following part numbers:—

Packing Piece	2 off	Part No. 1228484
Bolts	4 off	Part No. 19506111

These packings were fitted in production from Chassis No. B.8205252.

GEARBOX AND OVERDRIVE

SECTION E

CONTENTS

UNIFIED THREADS ARE USED THROUGHOUT

	Page
THREE SPEED SYNCHROMESH GEARBOX—Description	3
GEARBOX (AND OVERDRIVE *) ASSEMBLY	
—To remove (engine in position)	7
—To refit (engine in position)	8
TOOLS FOR DISMANTLING AND REASSEMBLING GEARBOX	9
GEARBOX—To dismantle and reassemble	9
—Main cover—to remove and refit	9
—Main cover—to dismantle and reassemble	9
—Rear cover assembly—to remove	11
—Speedometer pinion and bearing—to remove and refit	11
—Selector shafts and forks—to remove and refit	11
—Front cover and stemwheel—to remove	12
—Front cover assembly and stemwheel—to dismantle and reassemble	12
—Main shaft assembly—to remove from casing	12
—Main shaft assembly—to refit	12
—Main shaft assembly—to dismantle and reassemble	13
—Second speed synchro assembly—to dismantle and reassemble (mainshaft components)	13
—Layshaft assembly—to remove and refit	14
—Reverse wheel—to remove and refit	14
—Rear mainshaft bearing—to remove	12
—Gearbox—to reassemble	15
—Selector control—to adjust	16

*IF FITTED

OVERDRIVE

Page

—adjustment of controls ... 22
—circuit diagrams ... 20
—control of overdrive ... 19
—diagnosis of faults ... 22
—diagnosis of faults—overdrive does not engage ... 22
—diagnosis of faults—overdrive does not release ... 22
—diagnosis of faults—clutch slip in overdrive ... 22
—diagnosis of faults—clutch slip in reverse or freewheel condition on overrun ... 22
—gearbox switch—to adjust ... 21
—hydraulic system ... 19
—lubrication and maintenance ... 19
—oil pump ... 23
—operating valve ... 23
—overdrive unit—to remove from gearbox ... 24
—overdrive unit—to refit to gearbox ... 24
—pump valve ... 23
—throttle switch—to adjust ... 21
—working principles ... 17

OVERHAULING INSTRUCTIONS

—special tools ... 26
—to dismantle unit ... 26
—inspection ... 28
—planet carrier assembly ... 28
—to reassemble unit ... 29
—testing oil pressure ... 32
—dimensions and tolerances ... 33

GEARBOX

DESCRIPTION

General

A gearbox having three forward speeds and reverse is used, with synchromesh engagement for 1st (low) 2nd (intermediate) and direct drive

Internally bushed helical gears, rotating on the mainshaft and in constant mesh with the corresponding layshaft cluster gears, are used for first and second speeds, which are respectively engaged by dog teeth at the front of the sliding reverse wheel and in the sliding sleeve of the second and top speed synchro-hub, both of which are splined to the mainshaft.

Top gear is engaged by mating the dog teeth of the second and top speed sliding sleeve with those on the primary shaft (stem wheel), to obtain a direct drive to the mainshaft.

Reverse is engaged by sliding the spur gear type reverse wheel rearwards to mesh with the reverse idler which in turn meshes with the layshaft cluster.

Mainshaft and Primary Shaft (Stem Wheel)

The mainshaft is supported at its forward end by the primary shaft which runs in a ball race in the front of the main casing. Its front spigot bearing runs on needle rollers which are located endwise by a ring pressed into the bore of the stem wheel.

This allows the mainshaft to rotate within the stem wheel, as is required in all gears except top (direct drive). The rear end of the mainshaft is supported by a ball race which also governs its end float.

The primary shaft is splined into the clutch driven plate at its forward end and its gear is in constant mesh with the foremost gear of the layshaft cluster.

Layshaft Cluster

The layshaft cluster runs on the layshaft spindle and is carried on needle roller bearings at each end.

These needle rollers are located endwise by an abutment ring pressed into the outer end of each bearing recess in the layshaft cluster bore.

End float is controlled by a fixed bronze thrust washer at each end of the layshaft cluster, and is adjusted by the use of spacing collars of various alternative thicknesses fitted behind the rear fixed thrust washer.

Selector Linkage

Gear selection (across the neutral gate) on Series I and II cars is by a conduited cable connecting the hand lever linkage to the selector lever, placed in front of the gearbox top cover. From Series III cars this is achieved by a rod operated linkage. Gear-shift movement is by a rod operated linkage and relay levers, connecting the gear control shaft on the steering column to the gear shift lever in the top cover of the box.

An internal selector lever, operating within the safety latch inside the top cover, engages one of two selector forks to provide first and reverse or second and top gears. The safety latch serves to lock the disengaged selector fork in the neutral position.

The bias spring, on the control shaft, should have a MINIMUM length of 2½" when compressed, that is to say when the hand lever is either in first or reverse.

Incorrect adjustment of this spring may cause distortion of the bias spring bracket.

First Speed Synchromesh.

First gear is engaged by sliding the reverse wheel, splined to the mainshaft, in a forward direction so that external dog teeth at the front of the reverse wheel engage internal teeth cut in the first speed constant mesh wheel, which rotates around the mainshaft and is driven by the layshaft.

Interposed between the reverse and first speed wheels is a synchroniser which consists of an internally coned phosphor-bronze ring riveted into a steel cage, the bore of which is splined to the mainshaft in such a way that its splines have limited rotary movement in relation to the mainshaft splines.

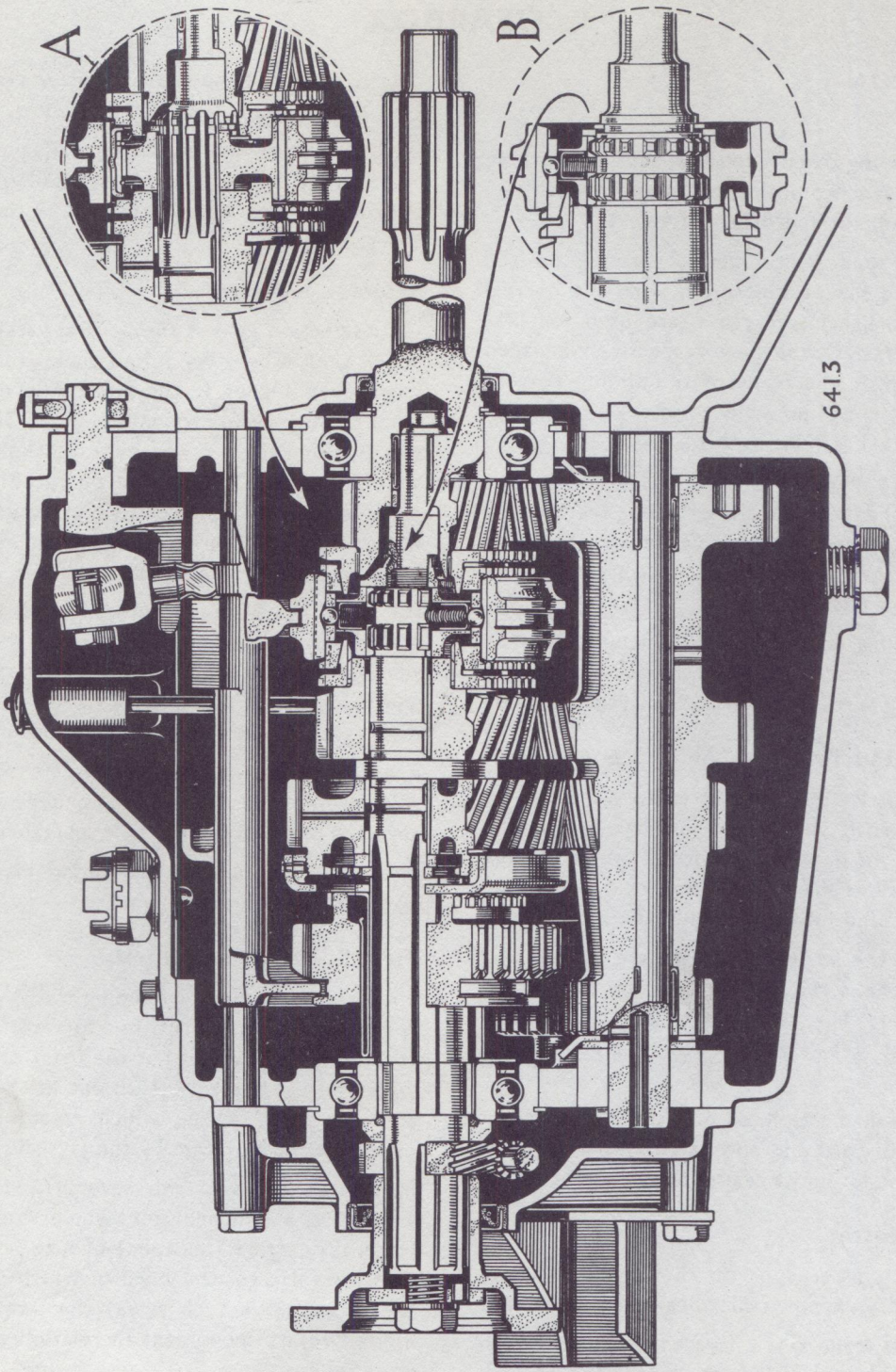

Fig. 1. *General arrangement of gearbox (Inset A—2nd and top speed synchromesh, Series I and II cars)*
(Inset B—Mainshaft with circlip securing 2nd and top speed hub, early Series III cars onward)

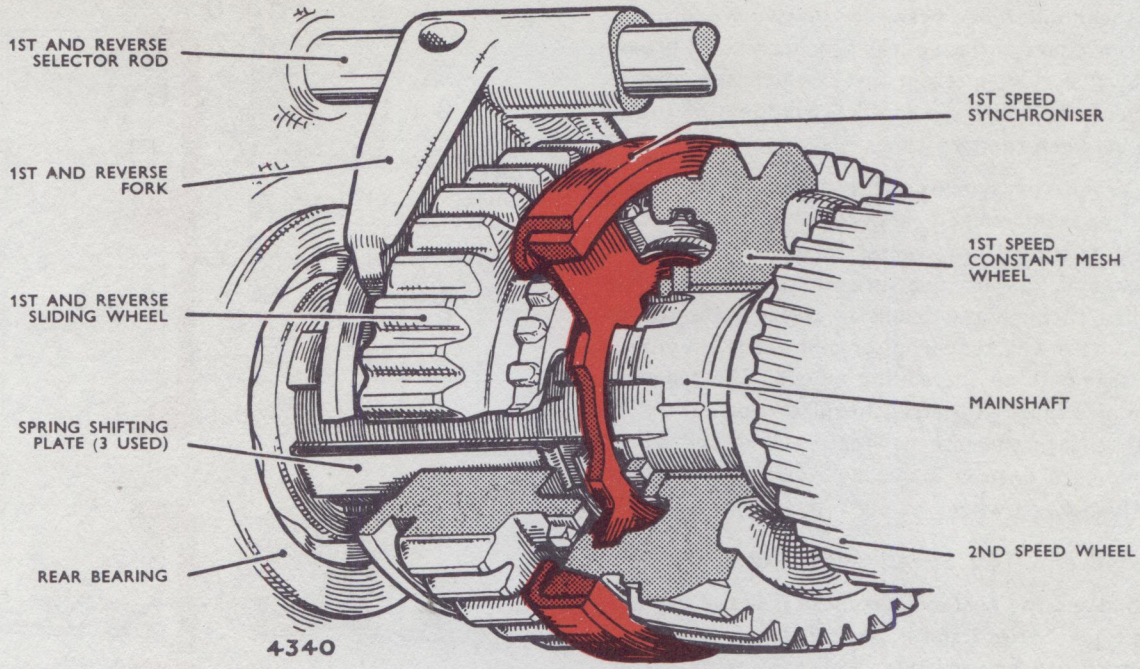

Fig. 2. *Section through 1st speed synchromesh*

The cage of the synchroniser is pierced, between its splined bore and its circumference, by three equidistant slots, the ends of which are chamfered on the side which faces the reverse wheel.

The dog teeth on the front of the reverse wheel are slotted to divide them into three segments which will pass through the slots in the synchroniser cage.

The edges of each segment are chamfered to engage with the chamfers in the cage slots already described.

An external cone machined on the rear end of the first speed constant mesh wheel completes the components of the synchromesh assembly.

Three spring steel shifting plates are inserted, along alternate mainshaft splines, between the reverse wheel and the synchroniser so that forward movement of the reverse wheel moves the synchroniser forward via these plates to effect synchronisation, at which time the reverse wheel slides over a lip on the plates to engage the gear.

Sequence of First Gear Engagement (See Fig. 3)

1. Primary forward movement of the first and reverse sliding wheel (A) pulls forward the three spring shifting plates (B) by the lip (C) on each plate. These spring plates, in turn, push the first speed synchro cone (D) into contact with the cone on the first speed constant mesh wheel (E). If the relative speeds of the wheels (A) and (E) are different, the synchro cone (D) will be rotated, due to frictional drag between the cones, to the limit of travel allowed by the three "loose fit" teeth engaging the mainshaft splines.

2. This causes the three slots in the synchroniser to move out of line with the three dog segments on the sliding wheel (A) and further movement of the sliding wheel overrides the lip (C) on the shifting plates. The chamfer on one end of each dog segment then engages the chamfer on the corresponding end of each slot in the synchroniser at (F) preventing further forward movement of the sliding wheel and, by continued forward pressure, reducing

the speed difference between the two wheels. The interior coned surface of the synchroniser is broken up by fine close pitch grooves which improve its efficiency by causing a rapid breakdown of the oil film between the two cones.

3. When the synchronising action is completed and the two wheels are rotating at the same speed, frictional drag ceases to exist between the cones, and forward pressure on the sliding wheel applied through the baulking surfaces (F) rotates the slots in the synchroniser and aligns them with the segments on the sliding wheel. The segments then pass through the synchroniser slots, and their teeth engage the internal teeth (G) in the wheel, providing a positive drive between the mainshaft and first speed wheel.

Second and Top Speed Synchromesh.

Second and top gear synchromesh is of the baulking ring type. Series I and II cars refer to Figs. 4 and 5. Series III cars onward refer to Fig. 6.

The components of each individual synchromesh unit consist of a driving gear "A" on which is a ring of clutch teeth "B" and steel cone "C". The sliding sleeve "D" has internal teeth in the bore.

These engage with the splined exterior of the hub member "E" and, when required, with the clutch teeth "B". Between the hub member "E" and the driving gear "A" is located a baulk ring "F" the bore of which is coned to fit the steel cone "C".

This interior coned surface of the baulk ring is broken up by fine close-pitch grooves, the effect of which is to cause a rapid breakdown of the oil film when the two members come together. On the outside of the baulk ring are teeth "G" which correspond to the clutch teeth "B". On the side adjacent to the sliding sleeve "D" these teeth are chamfered at a specially determined angle as also are the internal teeth "P" on the sliding sleeve "D".

Series I and II cars (see *Figs.* 4 and 5)

The baulk ring has also three slots "H" which engage with the end of the three shifting plates "T". These plates are positioned in slots cut along the hub member and they are of such a width that

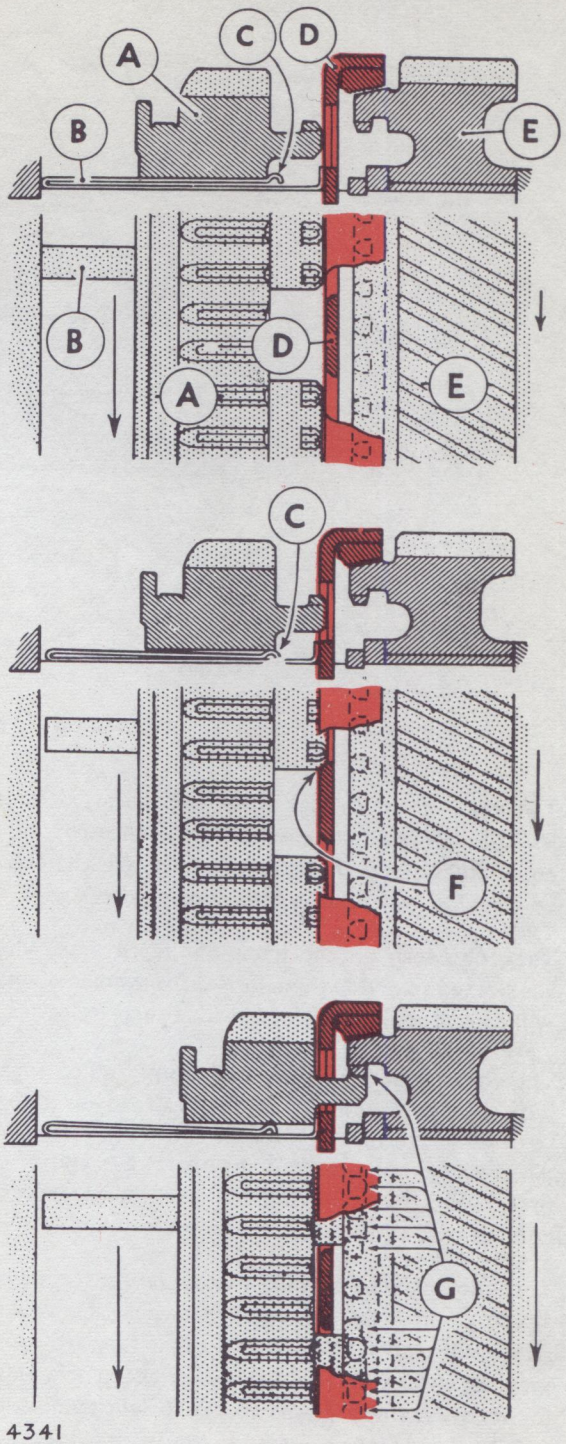

Fig. 3. *Diagram of 1st speed synchromesh*

the baulk ring is permitted to make a partial rotation in either direction (see space marked "H").

On the shifting plates is a small protusion "L" which locates in the groove "M" in the bore of the sliding sleeve at the neutral position. Spring circlips "N" load the shifting plates in an outward direction so maintaining a light pressure on the bore of the sliding sleeve.

Series III cars onward (see Fig. 6)

The baulk ring has three projections (J) which engage in the three slots in the hub member.

These projections are of such a width that the baulk ring is permitted to make a partial rotation in either direction (see space marked H). The three shifting plates (T) are positioned in the slots cut in the hub member.

In each shifting plate is a spring-loaded ball (K), the spring (O) and plunger (Q) being located in a drilling in the hub member beneath each shifting plate. The ball locates in the groove (R) in the bore of the sliding sleeve at the neutral position.

The operation of the unit is as follows:—

The sliding sleeve is moved to the left by pressure applied through the gear shift lever. This movement will carry the shifting plates to the left and bring the baulk ring into light engagement with the mating cone "C". At the same time the gear "A" will be rotating at a speed considerably different from that of the hub "E" and the baulk ring will therefore be dragged round by friction to the extent permitted by the clearance "H".

It will be noted that the baulk ring teeth "G" have now moved into the path of the advancing sliding sleeve teeth "P", which in turn endeavour to push the obstruction out of the way. In this way positive pressure is applied to the cone members increasing the frictional driving effort. As further pressure is applied through the gearshift lever the gear "A" is brought to the same speed as the sliding sleeve "D". The frictional drag on the baulk ring is then zero and the chamfered teeth of the sleeve and ring acting on each other force the baulk ring out of the way, thus allowing unrestricted

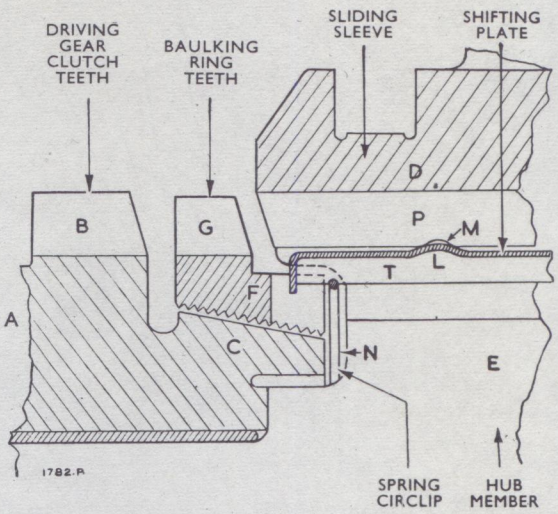

Fig. 4. *Synchro-hub assembly (Series I and II cars)*

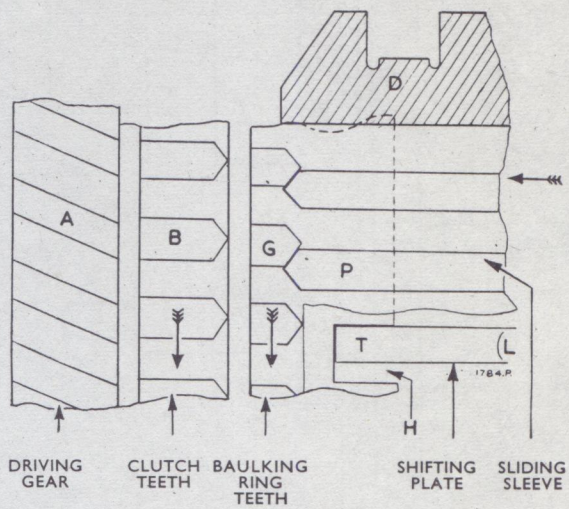

Fig. 5. *Synchro-hub in baulking position (Series I and II cars)*

movement into engagement with the clutch teeth "B". Since speeds are synchronised this movement is achieved with absolute silence.

Gearbox (and Overdrive if fitted)

To remove

If it is necessary to remove the gearbox from the car, the gearbox and overdrive must be taken out as one assembly and subsequently separated.

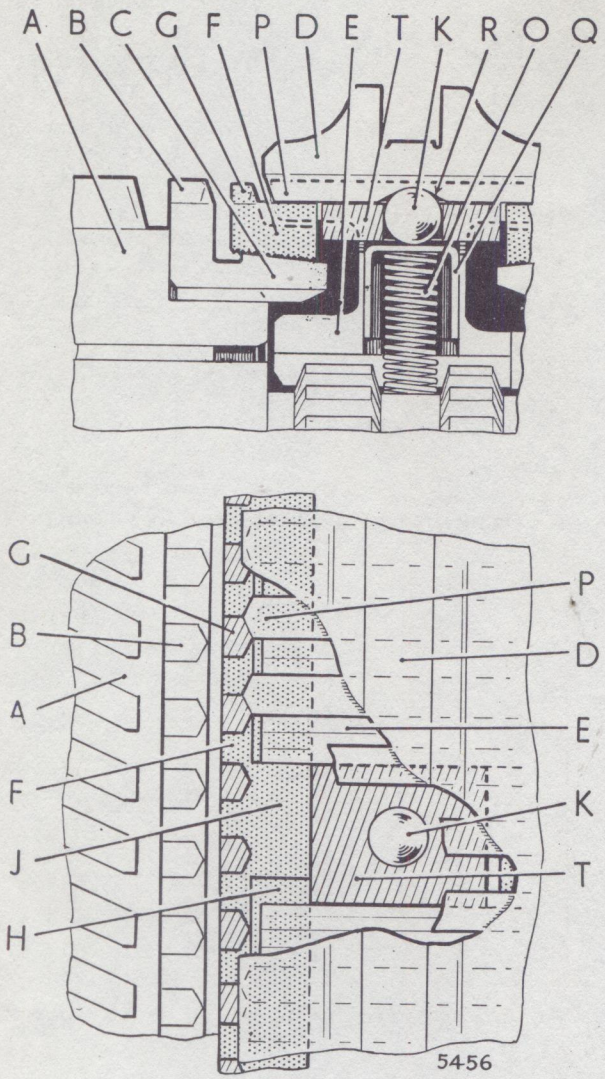

Fig. 6. *Synchro-hub (Series III cars onward)*

Before refitting to the car the gearbox and overdrive units must be reassembled.

To remove gearbox and overdrive units proceed as follows:—

Place the car on a lift or over a pit.

Disconnect negative lead from battery.

Disconnect propeller shaft at front coupling and centre bearing.

Support the engine by means of a jack and a block of wood beneath the sump.

Remove bolts securing engine rear mounting bracket to frame.

Disconnect speedometer cable from gearbox or overdrive unit.

Remove floor cover plate and disconnect rod from external change speed lever on gearbox.

Series I and II cars. Remove centre floor front cover plate and disconnect selector cable trunnion through floor. Disconnect outer cable from its abutment bracket on gearbox top cover. Disconnect gear change linkage bracket from front of gearbox casing and move to one side.

From Series III cars onward, disconnect the relay lever from the bell crank lever.

Disconnect wires from solenoid and gearbox switch (Overdrive only).

Remove four bolts securing gearbox to bell-housing.

Remove gearbox and overdrive unit rearwards, pulling the units back squarely to avoid straining the clutch.

The bellhousing remains in position on the engine.

To refit.

This is a direct reversal of the dismantling procedure, but great care must be taken when entering the gearbox on to the rear of the bellhousing in order to avoid damaging the clutch driven plate hub.

The gearbox must be pushed squarely home into position.

Before offering up the gearbox assembly ensure that the stem wheel splines are cleaned and free from rust. Smear a small amount of zinc oxide grease over the splines of the stem wheel before fitting. A suitable grease is Shell S.B.2498. Always check that this is present before mounting the gearbox into position.

After refitting the gearbox to the engine it will be necessary to check the adjustment of the selector

linkage. Adjust the stop rod attached to the relay linkage beside the gearbox to give support without preload.

Refill the gearbox with the recommended lubricant.

DISMANTLING AND REASSEMBLY INSTRUCTIONS.

Main cover—to remove (See Fig. 7)

Remove oil level dipstick (27).

Remove gearbox cover bolts and lift off main cover.

Remove abutment bracket (6). Note switches for overdrive (5) and reverse light (9).

To refit.

This is a reversal of the above procedure but care must be taken to ensure that the internal change speed lever (17) and its selector safety latch (23) engage in the selector fork gaps.

Before tightening the cover securing bolts, position the cover to obtain an unrestricted swing of the selector safety latch across the slots of the selector forks.

Main cover—to dismantle and reassemble (See Fig. 7).

Do not dismantle unless known to be faulty in operation.

Undo nut (10) and remove clamp bolt and washers (11 and 12) securing external gearshift lever (14).

Undo lock washer and remove nut (1) and hook bolt (3) releasing external selector lever (2).

Undo lock washer (18) on internal gear change lever and remove setscrew (19) releasing the lever (17).

At this stage special attention should be paid to the detent mechanism fitted to Series I and II cars comprising items (24) which has two functions:—

(1) To provide a detent to locate the neutral position of the shaft (16),

(2) As the screwed thimble is bored eccentrically where it contains the spring controlling the detent ball, the operating position of the internal change speed lever (17) can be adjusted axially to a limited degree by turning the thimble by means of its slotted head. This axial adjustment is provided so that the initial setting can be made in manufacture and should not normally be disturbed in service operations.

Remove locating pin (7) by means of a punch and push out the change speed lever shaft (16). It will be obvious that the ball and spring (24) will then be released into the bore in the cover. Take care that these items are not lost.

Drive out the pin (4) and push the selector shaft (23) and lever (17) into the cover.

Reassembly.

Refitting is a reversal of the above but care must be taken when tightening the bolt (19) securing the change speed lever (internal) to ensure that the bolt is not overtightened, and the change speed lever is free to swing on its shaft. The lock washer must then be securely fixed around the flats of the bolt head.

On Series I and II cars the reassembly of the ball and spring must be carried out by inserting them through the bore in the cover for the shaft (16).

After replacing the locating pins (4 and 7) peen over both ends of the hole with a suitable punch.

Tools for dismantling and reassembling the gearbox unit. (See also Section S.)

The dismantling and reassembling of the gearbox will be simplified by the use of the following tools, their uses being fully described in the ensuing instructions.

1. Dummy layshaft spindle—made up, dimensions ·865″ (22 mm.) diam. × 7·965″ (202·3 mm.) long.

2. Two dummy selector shafts $\frac{7}{16}$″ (11·1 mm.) diam. × 3″ (76·2 mm.) and 5″ (127 mm.) long.

3. Selector shaft loading tester clamp—Churchill Tool No. R.G.62 or any suitable clamp to attach to end of the selector shaft.

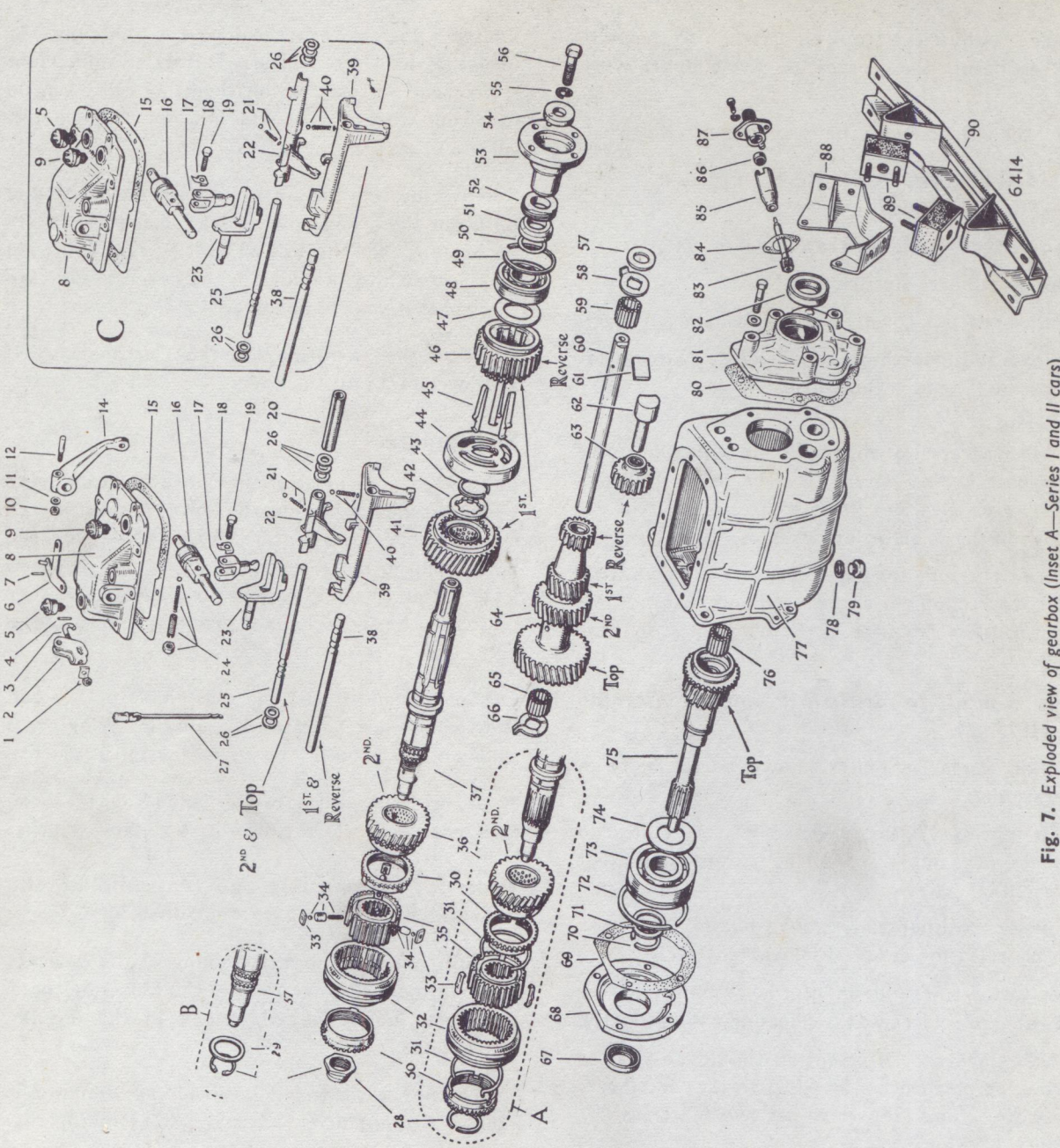

Fig. 7. *Exploded view of gearbox (Inset A—Series I and II cars) (Inset B—Early Series III cars) (Inset C—Series IV cars)*

Rear cover assembly—to remove (See Fig. 7)

Remove main cover assembly (8).

Prevent rotation of main shaft by engaging two gears.

Remove bolt (56) and spring washer (55) and pegged washer (54) securing driver coupling (53) to mainshaft (Gearbox without overdrive).

Remove driver coupling.

Return selector forks to neutral position.

Remove five bolts and washers securing the cover and support plate to the casing.

Remove cover and support plate.

Remove paper joint (80).

Remove speedometer driving wheel (52) and distance piece (51) from mainshaft (37).

Remove the "O" ring (50) from behind the bearing.

Speedometer pinion and bearing.

To remove from rear cover and refit (not overdrive models).

The pinion and bearing are retained by an outer flange (87) secured by two screws which must first be removed.

Remove the pinion bearing (85) and pinion (83) by pushing the bearing outwards from the inside.

Note the seal (86) and joint (84).

Selector shafts and forks—to remove and refit (See Fig 7).

It is essential that the selector shafts are removed rearwards only as they are a tighter fit in the front of the casing than the rear to avoid oil leaks.

Use dummy shafts to retain the balls and springs, as described on the previous page.

Carefully push rearwards the first and reverse selector shaft (38), entering a short dummy shaft $\frac{7}{16}$" (11·1 mm.) diam., and 5" (127 mm.) long, in order to secure the ball and spring against dropping into the casing.

Remove the 2nd and top gear selector shaft (25) in similar manner using a dummy shaft 3" (76·2 mm.) long. Note the position and number of the spacing washers, and the distance collar fitted to Series I, II and III cars. The spacing washers are inserted to ensure that the selector fork may not over-run the detent in the shaft by more than ·020" (·25 mm.).

Remove the 1st and reverse selector fork (39).

Remove the 2nd and top selector fork (22), taking care of the ball, spring and shims (21) if the latter are fitted. This will be fulfilled if the dummy shafts are used.

To refit

Reassembly of the selector forks and shafts is a reversal of the above instructions. Do not omit the collar at the rear on Series I, II and III cars, or the spacing washers. Check that the detent over-run is not greater than ·020" (·25 mm.). If it is excessive insert washer P.53593, which is ·010" (·125 mm.) thick, to reduce the clearance.

Adjustment of axial load between the selector shafts and forks

This operation should be carried out on the bench before assembling the second and top and first and reverse selector shafts and forks into the gearbox.

Proceed as follows: Grip the selector fork in a vice and insert shims, spring and ball, then the selector shaft, pressing the ball and spring by inserting a punch through the hole in the opposite side of the fork.

The axial load necessary to move the selector shaft groove across the ball in the top and second gear fork should be 23—28 lbs. (10·43—12·70 kgs.).

This may be tested by means of a spring balance attached to the end of the selector shaft by a hand vice or the Churchill selector shaft loading tester.

In the case of the first and reverse gear fork the axial load should be 14—16 lbs. (6·35—11·79 kgs.)

Adjust axial load to the above figure by addition or removal of shims. As it will be necessary to detach the selector shaft from the fork to assemble these parts to the gearbox it will be necessary to retain the adjusted ball and spring in the fork by means of a dummy selector shaft as previously described.

Front cover and stemwheel.
To remove (See Fig. 7).

The front cover assembly can only be withdrawn after the layshaft cluster has been lowered into the bottom of the gearbox casing.

Remove rear cover (81).

Remove the lock plate over the layshaft and reverse spindles (61).

A made up dummy layshaft spindle is required when dismantling and reassembling the layshaft cluster. The dimensions should be ·865″ dia.×7·965″ long.

Displace the layshaft (60) by entering the dummy layshaft from the rear, pushing it forwards until clear of the thrust washers (57 and 58), so lowering the layshaft cluster assembly (64) into the bottom of the casing.

Remove the four setscrews from the front cover (68) which can now be withdrawn from the casing.

Carefully drive the front bearing and stemwheel out of the casing in a forward direction. Do not lose the needle rollers (76) inside the stem wheel bore. There should be 23 needle rollers.

These are located endwise by a pressed in abutment ring which need not normally be removed.

Remove the top gear baulking ring (30) from the synchro hub (35).

In order to maintain the efficient functioning of the synchronising mechanism it is advisable to mark each baulking ring with its mating cone by some form of identification, such as scribing in a prominent position the numbers 2 and 3 indicating 2nd and top speeds.

To dismantle and reassemble (See Fig. 7).

Remove circlip (70) securing bearing (73) and abutment washer (71) to stem wheel (75). Press bearing off stem wheel.

Remove bearing shield (74) do not omit this on reassembly.

Reassembly is a reversal of the preceding instructions with particular attention to the following points:—

The circlip (70) securing the bearing to the stem wheel must always be renewed.

The stem wheel journal is plain and an oil seal is fitted to the front cover.

Fit a new seal and ensure that it is carefully fitted over the shaft.

In this assembly a predetermined amount of float is provided for and is controlled by the class of fit of the members in the ball bearing. This is usually a three spot bearing denoted by three faint rings marked on the face of the bearing outer track.

Mainshaft assembly.
To remove from casing (See Fig. 7).

Drive the shaft to the rear so that the rear bearing (48) is exposed. Place two strips of metal between the bearing and the rear face of the casing and drive the mainshaft forwards through the bearing.

Remove the mainshaft assembly complete through the top of the casing, holding the reverse wheel (46) on the shaft during removal. Note the oil guard washer (47) immediately in front of the rear bearing.

To refit.

Refitting the mainshaft assembly is a reversal of the preceding instructions with particular attention to the following:—

The first speed synchroniser (44), reverse wheel and first speed shifting plates (45) must be held in position on the mainshaft whilst its rear end is lowered through the top of the casing. Do not omit the oil guard washer (47), in front of the rear bearing (48).

Support the mainshaft at its forward end and drive the rear bearing on to the shaft. The bearing and shaft must now be driven forward until the bearing circlip (49) is against the rear face of the casing.

To dismantle and reassemble the mainshaft components.

As the rear bearing has already been drawn off the mainshaft to permit its removal from the casing, the reverse wheel, shifting plates and first speed synchroniser can now be removed.

Secure the mainshaft in a vice using soft metal clamps.

Remove circlip (43), thrust washer (42) and first speed wheel (41) from the rear of the mainshaft.

On Series I and II cars remove the spring ring (28) from the front end of the mainshaft. On early Series III cars remove the circlip and distance washer (28) and (29). From later Series III cars remove the securing nut (28).

Remove sliding sleeve (32) from the 2nd and top speed synchrohub (35). On Series III cars this will release the three shifting plates with balls, springs and plungers (33 to 34). Take care on removing the sliding sleeve that these items do not spring out and become lost.

Remove the three shifting plates (33).

Remove synchrohub from mainshaft.

Remove two synchro circlips (31) from synchrohub (Series I and II cars only).

Remove 2nd speed wheel (36).

Remove baulking ring (30) from 2nd speed wheel cone.

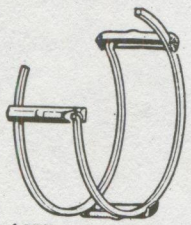

Fig. 8. *Arrangement of 2nd and top speed hub circlips (Series I and II cars)*

To refit.

This is a reversal of the preceding instructions with particular attention to the following:—

On Series I and II cars ensure that the 2nd and top synchro circlips are correctly located in the underside of each shifting plate. Arrange the circlips so that their locating hooks do not locate in the same

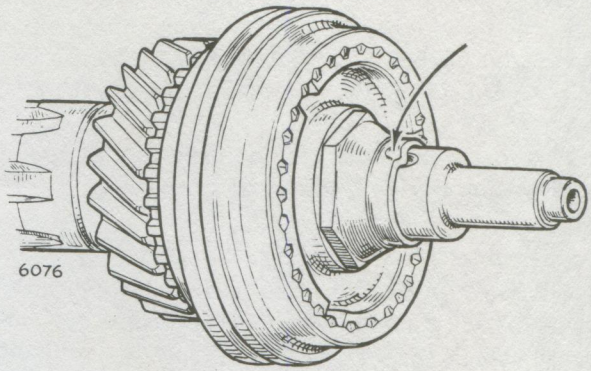

Fig. 9. *Front view of mainshaft showing nut securing 2nd speed synchrohub (late Series III cars onwards)*

shifting plate and so that at least one circlip passes across the underside of each shifting plate. The free ends of the circlips must follow opposite directions from one another in relation to their respective locating hooks (See Fig. 8).

From Series III cars the springs beneath each shifting plate will have to be compressed to allow the sliding sleeve to pass over the shifting plates and balls on the hub member (See Fig. 7).

Fit the first speed shifting plates (45), lipped end to the front, over the shallow splines of the mainshaft and then fit the reverse wheel over the plates.

Fit the oil guard washer next (this is important).

Fit the rear bearing, with circlip groove to the rear, to the shaft after the shaft has been positioned in the casing.

End float of 1st and 2nd speed wheels.

2nd speed wheel.

Series I and II cars

Place the mainshaft with forward spigot upwards in a vice, slide on the 2nd speed wheel and hub. Break a piece off the old circlip, remove the rough edges and insert the piece into the mainshaft groove. Using feelers check the end float which now exists. The circlip (28) is made in selective thicknesses. Select a circlip to give the correct end float of ·004″/006″ (0·1/0·15 mm).

The new circlip may absorb all end float when fitted, due to slight distortion (like a spring washer).

After fitting the circlip, hold the mainshaft in the vice and load the gearwheel towards the circlip—to flatten it. End float should then be measurable by feeler between the mainshaft flange and the rear face of the gearwheel.

This method should also be used for 1st speed wheels on Series I, II and III cars.

Series III (early) (See inset Fig. 7).

A distance piece (29) available in selective thicknesses is interposed between the synchro hub and a circlip. It is essential that the hub is a press fit on the mainshaft and is fully located against the mainshaft shoulder. The thickest possible distance piece that can be inserted between the synchro hub and the circlip should be fitted by selective assembly of the distance pieces available. Ensure that the circlip is fully located in the groove in the mainshaft.

Series III (late) and IV (See Fig. 7)

From late Series III cars the 2nd speed hub is secured by a nut (Fig. 9). Tighten the nut to a torque of 80 lbs. ft. (11 kg.m) and with a suitable punch peen the flange of the nut into the indentation in the mainshaft (Fig. 9). Always use a new nut on re-assembly.

1st speed wheel.

Having assembled the 2nd speed parts turn the mainshaft upside down in the vice and place on it the 1st speed wheel against the mainshaft centre flange.

Fit a new thrust washer (42) and offer the new circlip (43) up to the mainshaft groove.

Now check the end float by the same method as that given for the 2nd speed wheel, of Series I and II cars, and if necessary, select the correct circlip to obtain this dimension.

Now complete the fitting of the 1st speed parts by inserting over the mainshaft the 1st speed thrust washer and circlip followed by the synchroniser. Then place one shifting plate along each low mainshaft spline, with the lipped end of the plate to the front, and engage the reverse wheel, with dog teeth to the front, over the shifting plates and mainshaft. Fit the oil guard washer.

The mainshaft is now ready for fitting into the casing when the rear bearing will locate all the parts.

Layshaft assembly.

To remove from casing and refit.

Remove the layshaft and reverse spindle lock plate as described under "front cover and stem wheel—to remove", and using the dummy layshaft spindle drive out the spindle rearwards until it is clear of the thrust washers. The layshaft cluster will then drop downwards into the bottom of the casing.

Lift the cluster assembly complete with rollers (59, 65) through the aperture in the top of the casing.

Remove the bronze thrust washer located at each end of the cluster and the spacing washer which is fitted behind the rear thrust washer adjacent to the casing.

Replacement is a reversal of the preceding operations, but it is important to note that the end float of the cluster between the thrust washers should be within the limits of ·004″/·008″ (0·1/0·2 mm.).

This clearance should be checked with the assembly dry and adjusted by selective assembly of the rear spacing washer which is positioned behind the rear bronze thrust washer.

Ensure, when fitting the layshaft spindle, that there are 26 needle rollers at each end of the cluster bore, that the thrust washers are not displaced and that the end float is still correct.

Reverse idler wheel.

To remove from casing and refit (Mainshaft and Layshaft removed).

Remove spindle lock plate as described above and withdraw the reverse idler wheel spindle (62) rearwards from the casing.

Remove the reverse wheel which runs in a bronze bush on the spindle.

Refitting is a reversal of the preceding instructions.

If any appreciable wear has taken place in the bronze bush, a new bushed gear should be fitted together with a new spindle.

The bush and gear are not serviced separately as the bush is fine bored in manufacture to ensure that the bore is concentric with the gear teeth.

GEARBOX—TO REASSEMBLE

During assembly the following points must be borne in mind:—

Absolute cleanliness is essential.

Use a liberal supply of clean oil when finally assembling all moving parts.

Check all moving parts for freedom of movement; always fit new paper joints to the front and rear casings and top cover.

Seal the casing at the front end of the layshaft spindle and selector rods with a good brand of sealing compound.

1. Fit reverse wheel and shaft into casing.
2. With the aid of grease, position the layshaft rear spacing washer and the bronze thrust washers in the casing. The rear spacing washer fits between the rear bronze thrust washer and the thrust face in the rear of the casing.
3. See that there are 26 needle rollers at each end of the layshaft cluster. Locate them with grease. See that one abutment ring is firmly located at each end of the cluster bore. This ring governs the end float of the needle rollers and need not normally be disturbed as it is a tight fit in the bore of the cluster.
4. Insert dummy spindle through the cluster to locate the needle rollers in place and then lower the cluster complete with dummy shaft into the casing. Check end float.
5. Hold the reverse wheel, shifting plates and synchroniser on the end of the mainshaft and enter the mainshaft through the top of the casing, passing its rear end outwards through the rear bearing aperture. Fit the oil guard in front of the rear bearing.
6. Support the mainshaft at its front end and fit the rear bearing, driving it fully into position on the shaft.
7. Drive the bearing and shaft forwards until the bearing circlip is against the rear face of the casing.
8. Ensure that 23 needle rollers are in position in the bore of the stem wheel and that the abutment ring is firmly located in position in front of the rollers. Then fit the front cover and stem wheel assembly using a new paper joint and jointing compound.

   The stem-wheel must be driven in by means of the outer track only. A hollow drift should be used. This ensures that the inner circlip, which locates the bearing on the stem-wheel shaft, does not receive any damage during the fitting operation which might permit the stem-wheel to enter the gearbox too far and foul the mainshaft.

   On no account should the stem-wheel be fitted to the gearbox by pressing the flywheel spigot end of the shaft.
9. Invert gearbox and insert the layshaft spindle, ensuring that the rear spacing washer and the thrust washers at each end are correctly positioned.
10. Fit layshaft and reverse spindle lock plate.
11. Place gearbox upright and fit the 2nd and top and the 1st and reverse forks in this order, ensuring that the dummy spindles are in place to retain the shims, spring and ball in each fork. Now fit both the selector rods from the rear, with their long ends to the rear of the box. Do not forget distance tube at the rear on Series I, II

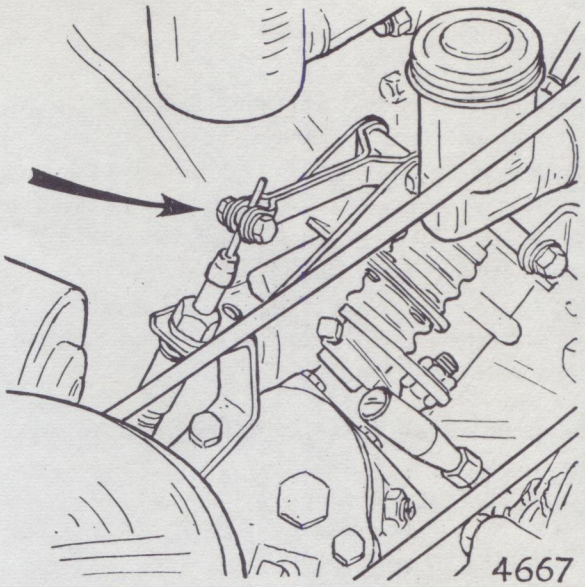

Fig. 10. *Selector cable adjustment (Series I and II cars)*

and III cars, and the washers on the 2nd and top fork.

Fit "O" ring (50) to mainshaft then fit spacer and speedometer gear.

12. Refit rear cover, check that shafts are free and that all gears can be selected. Ensure that the selector fork loading is correct, as described under "selector shafts and forks to refit".
13. Fit the main cover, taking care to position it so that the internal selector lever moves freely across the slots in the forks.

Selector cable—To adjust (Series I and II cars)

1. See that the hand lever is in NEUTRAL and in the FIRST and REVERSE line, nearest to the steering wheel. Keep it in this position against the pull of the bias spring.
2. Open the bonnet and slacken the cable pinch nut at the end of the lever on the steering column (Fig. 10). Use two spanners to avoid kinking the cable.
3. Grip the inner cable and pull it upwards as far as it will go.
4. Tighten the cable pinch nut.

Selector rod—To adjust (Series III cars onward)

1. Remove the large cover plate from the transmission tunnel and disconnect relay lever to bell crank lever (A, Fig. 11).
2. Lift hand change lever as far as possible towards steering wheel and secure in this position. This places the hand-change lever in the neutral position between first and reverse gears.
3. Check that the distance between the centre of the gearbox selector lever trunnion bolt and the centre of the bellcrank ball joint is 4·75" (12 cm.). Adjust if necessary by slackening the trunnion bolt.
4. Turn the bellcrank lever as far as possible in a clockwise direction (B, Fig. 11). This places the gearbox selector lever in the neutral position between first and reverse gears.
5. Adjust the length of the relay lever until reconnection can be made without moving the linkage.
6. Engage top or second gear. Adjust the small clip situated underneath the upper support bracket until the rubber washer butts against the underside of the upper support bracket.

Adjustment of hand change lever

Place the hand change lever in neutral. Open the bonnet and disconnect the ball joint from the gearshaft lever (bottom of the control shaft). Adjust the length of the control rod until the end of the hand change lever is 1—1½" (25—28 mm.) above the horizontal when the ball joint is reconnected.

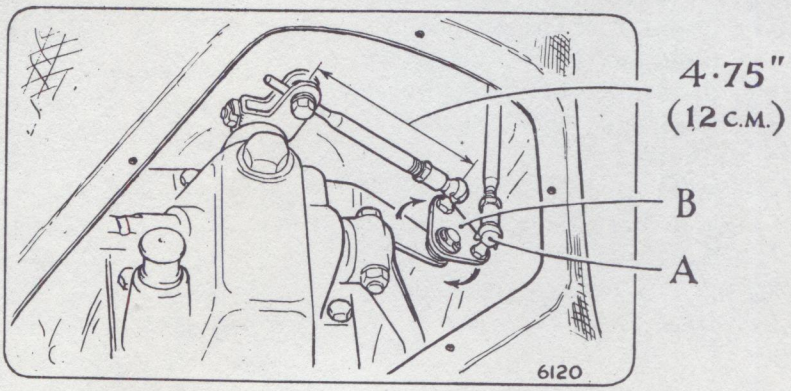

Fig. 11. *Selector rod adjustment (Series III cars onward)*

LAYCOCK/DE NORMANVILLE OVERDRIVE

MAINTENANCE AND ADJUSTMENT

NOTE: ALL THREADS IN THIS UNIT ARE UNIFIED

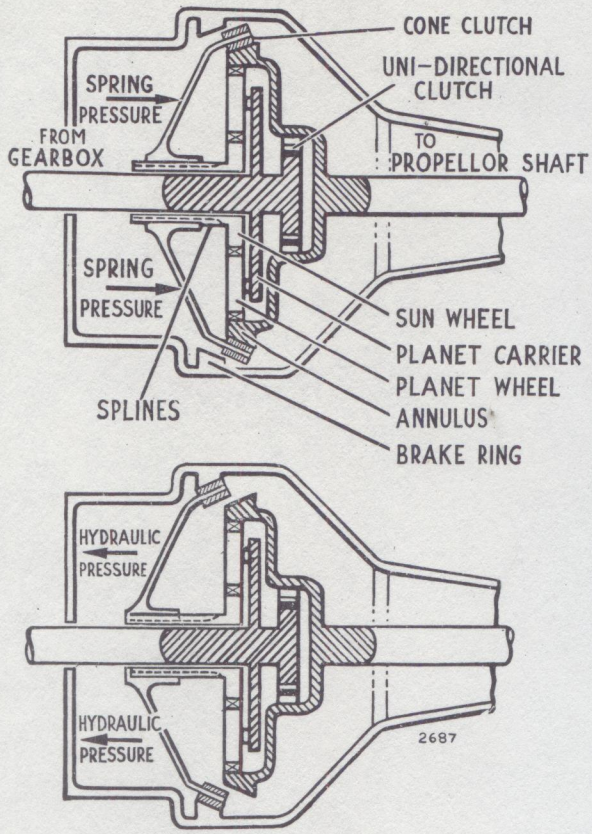

Fig. 12. *Diagrammatic sections*

The Laycock/de Normanville overdrive unit gives an increase in propeller shaft speed of 28·6%, that is, it has a ratio of 0·778 : 1. It will operate in 2nd and top gears on Series I, II and III cars. On Series IV cars it will operate in top gear only.

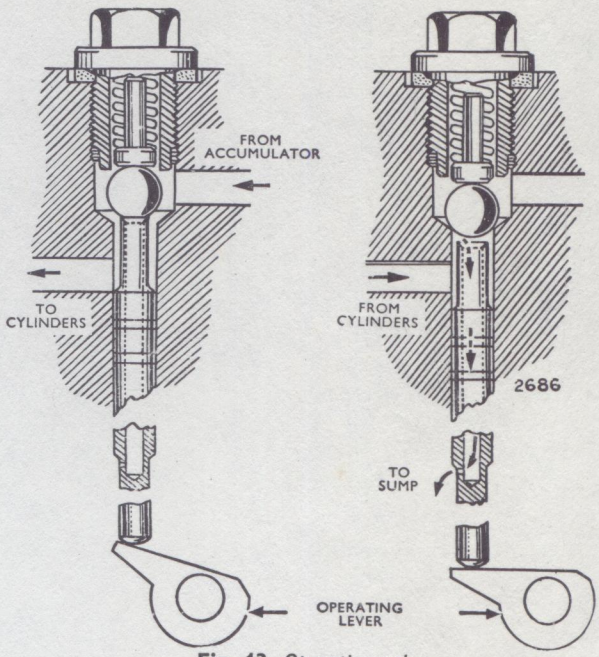

Fig. 13. *Operating valve*

WORKING PRINCIPLES

At the top of Fig. 12 the unit is shown diagrammatically in direct drive. The cone clutch, which is splined to an extension of the sunwheel, is held to the rear by spring pressure so that the inner friction band contacts the outside of the annulus.

This locks the gear train, and the drive is transmitted directly through the uni-directional clutch.

Any over-run or reverse torque is taken by the cone clutch.

The lower illustration in Fig. 12, shows the unit in overdrive. The cone clutch is held forward by hydraulic pressure so that the outer friction band of the clutch is locked to the stationary brake ring. As the cone clutch is splined to the sunwheel, the sunwheel is also held stationary. The planet carrier is splined to the input shaft, and is driven by it. The planet wheels are thus driven round the stationary sunwheel, and in so doing rotate the annulus and tail shaft at a speed greater than that of the input shaft.

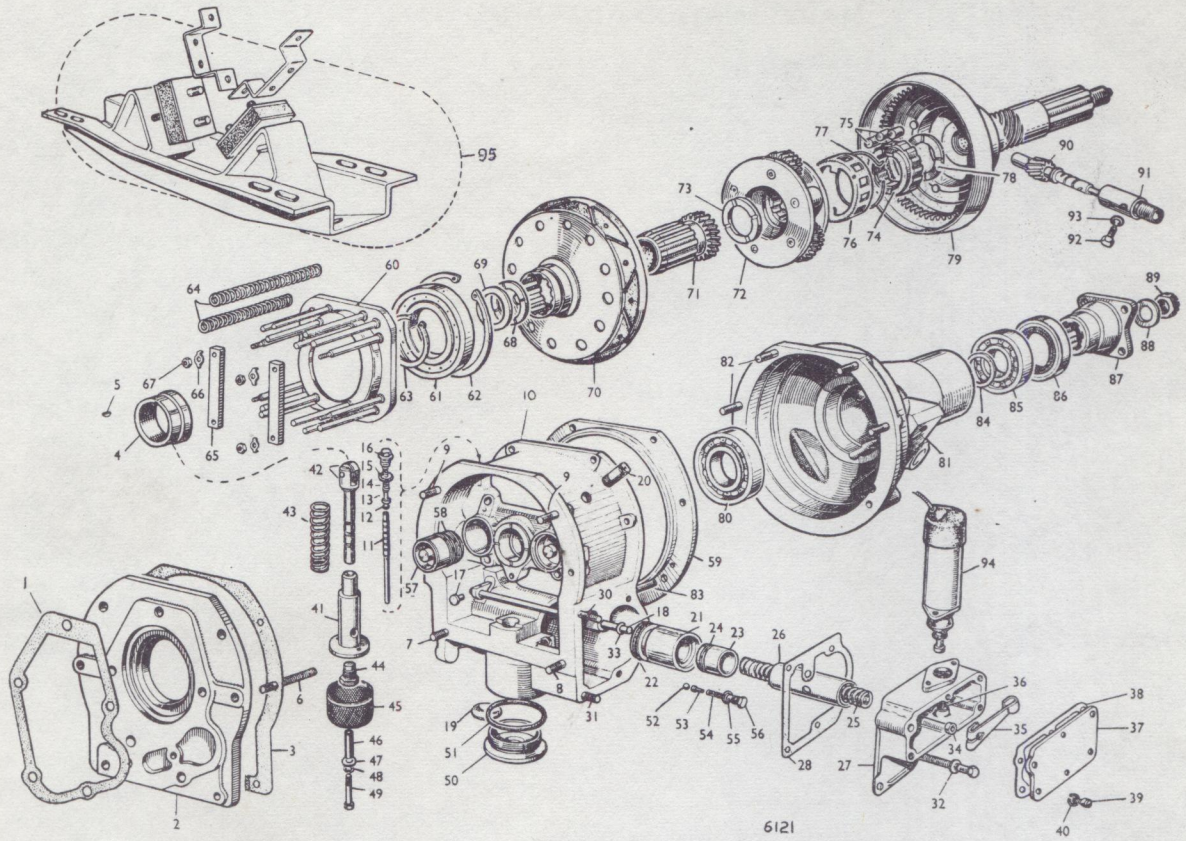

1. GASKET
2. ADAPTOR PLATE
3. GASKET
4. CAM
5. KEY
6. STUD, 2 7/8"
7. STUD, 1 1/2"
8. STUD, 1 3/4"
9. STUD, 1 1/4"
10. MAIN CASING
11. OPERATING VALVE
12. BALL
13. PLUNGER
14. SPRING
15. WASHER
16. PLUG
17. GUIDE PEG
18. OPERATING SHAFT AND CAM
19. SEALING DISC
20. BREATHER
21. ACCUMULATOR HOUSING
22. RUBBER RING
23. ACCUMULATOR PISTON
24. PISTON RING
25. PISTON SPRING
26. TUBE
27. SIDE COVER
28. GASKET
30. STUD, 2 3/4"
31. STUD, 1 3/8"
32. WASHER
33. OIL SEAL
34. COLLAR
35. OPERATING LEVER
36. RUBBER STOP
37. COVER PLATE
38. GASKET
39. SCREW
40. WASHER
41. PUMP BODY
42. PUMP PLUNGER
43. PUMP SPRING
44. PLUG
45. FILTER
46. DISTANCE PIECE } EARLY
47. PLAIN WASHER } UNITS
48. SPRING WASHER } ONLY
49. BOLT
50. DRAIN PLUG
51. WASHER (FIBRE)
52. BALL VALVE
53. PLUNGER
54. SPRING
55. COPPER WASHER
56. PLUG
57. OPERATING PISTON
58. PISTON RING
59. BRAKE RING
60. THRUST PLATE
61. BEARING
62. CIRCLIP (LARGE)
63. CIRCLIP (SMALL)
64. SPRINGS (TWELVE)
65. BRIDGE PIECE
66. TAB WASHER
67. NUT
68. THRUST WASHER
69. THRUST WASHER (SELECTIVE)
70. CLUTCH CONE
71. SUN WHEEL
72. PLANET CARRIER & WHEEL
73. THRUST WASHER
74. RATCHET WHEEL
75. ROLLERS (TWELVE)
76. CAGE
77. SPRING RING
78. THRUST WASHER
79. ANNULUS WHEEL
80. BEARING
81. REAR COVER
82. STUD, 1 3/8"
83. STUD, 2 3/4"
84. SPACING WASHER (SELECTIVE)
85. BEARING
86. OIL SEAL
87. DRIVER COUPLING
88. WASHER
89. NUT
90. SPEEDO PINION
91. BEARING
92. LOCKING SCREW
93. WASHER
94. SOLENOID
95. REAR SUPPORT BRACKETS

Fig. 14. *Exploded view of overdrive unit*

THE HYDRAULIC SYSTEM (see Fig. 14)

A cam (4), keyed to the gearbox mainshaft, operates the plunger of a pump (42), which supplies the accumulator (21—26). When the oil in the accumulator has reached the required pressure, relief holes are uncovered and the surplus oil is led through drillings to the main bush in the casing and thence to the centre of the mainshaft where it is centrifuged out at various points for lubrication of the moving parts.

From the accumulator, oil under pressure is passed to the operating cylinders via the operating valve (11—16) shown diagrammatically in Fig. 13. When the overdrive control is operated the valve is lifted, thus holding the ball off its seat against the pressure of the plunger spring. Oil then passes from the accumulator to the operating cylinders, forcing the pistons (57) forward. When the overdrive control is moved to the disengaged position, the spring plunger pushes the ball on to its seat, and the valve (11) falls away from the ball. Oil from the cylinders then returns through the centre of the valve to the sump. Near the bottom of the valve is a small jet which slows down the emptying of the cylinders, to assist smooth re-engagement of direct drive.

LUBRICATION AND MAINTENANCE

The oil in the overdrive unit is common with that in the synchromesh gearbox and the level should be checked with the gearbox dip-stick. To drain the gearbox and overdrive units, two drain plugs must be removed (see Fig. 15).

Before draining, the overdrive switch should be moved to the engaged position and back again, with the engine stopped, ignition switched on, throttle depressed and top gear selected, ten or twelve times to empty the overdrive hydraulic system.

When the units have been drained the overdrive pump filter should be cleaned by washing in petrol or paraffin. On early units the filter can be withdrawn after unscrewing the bolt disclosed when the drain plug has been removed. On later units the filter is released on removing the drain plug.

It is essential that the approved lubricant be used when refilling. Trouble may be experienced if some types of extreme pressure lubricants are used, because the planets act as a centrifuge to separate the additives from the oil.

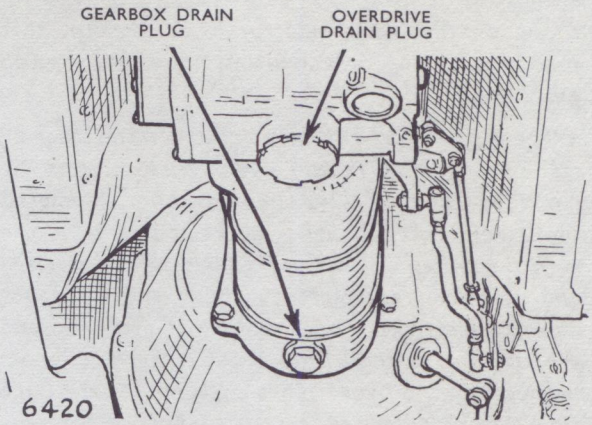

Fig. 15. *Drain plugs*

The combined capacity of synchromesh gearbox and overdrive units is 5¼ pints (6·3 American pints, 3 litres). If the units have been drained and refilled the oil level should be rechecked after the car has been run, since a certain amount of oil will be retained in the hydraulic system.

It must be emphasised that any hydraulically controlled transmission must have clean oil at all times and great care must be taken to avoid the entry of dirt whenever any part of the case is opened. This applies to adding oil to the transmission and to servicing the unit.

Any dirt or even lint from a wiping cloth that finds its way into a valve may cause serious difficulty.

When the unit is dismantled for any service work the parts must be thoroughly cleaned and kept covered with an oily lintless cloth until reassembled.

Similar care should be taken when handling the hydraulic valves, etc., since scratches or nicks might cause leakage on reassembly.

CONTROL OF OVERDRIVE

Series I, II and III cars (Fig. 16)

The overdrive is actuated by a solenoid, controlled by a switch on the steering column. A switch mounted in the gearbox top cover, and operated by

a cam on the inside selector lever, ensures that overdrive can be obtained only in second or top gears.

When the gearbox switch is closed and the steering column switch is in the overdrive position, the circuit to terminal W2 of the relay is not completed until the throttle pedal is depressed to close the throttle switch. The relay coil is now energised and its circuit completed through the resistance and earth return. The armature is attracted and the contacts closed. Thus the overdrive solenoid is energised and overdrive is engaged. At the same time the relay is self-fed by the connection between C2 and C4, and it will continue to function until either the gearbox switch is opened or the steering column switch changed to the direct drive position, dependent on accelerator depression.

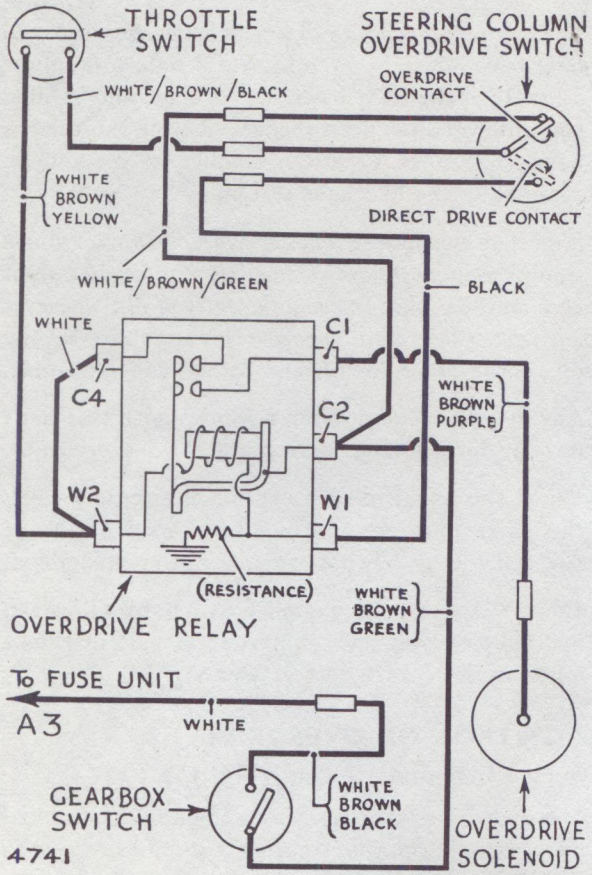

Fig. 16. *Circuit diagram (Series I, II and III)*

Series IV cars (see Fig. 17)

The overdrive is actuated by a solenoid, controlled by a switch on the steering column. A switch mounted in the gearbox top cover, and operated by a lug on the 2nd/3rd selector fork, ensures that overdrive can be obtained only in top gear. A warning light indicates when overdrive is engaged.

When the overdrive switch is moved to the overdrive position and the gearbox switch is closed (gear lever in 3rd gear position) the circuit is made to terminal W2 of the relay. The relay coil is now energised and the circuit completed through the resistance and earth return. The armature will be attracted and the contacts closed. The overdrive solenoid will be energised from the circuit made from terminal C2 through the relay armature and contacts to terminal C1. The overdrive will be engaged and the warning light illuminated. The

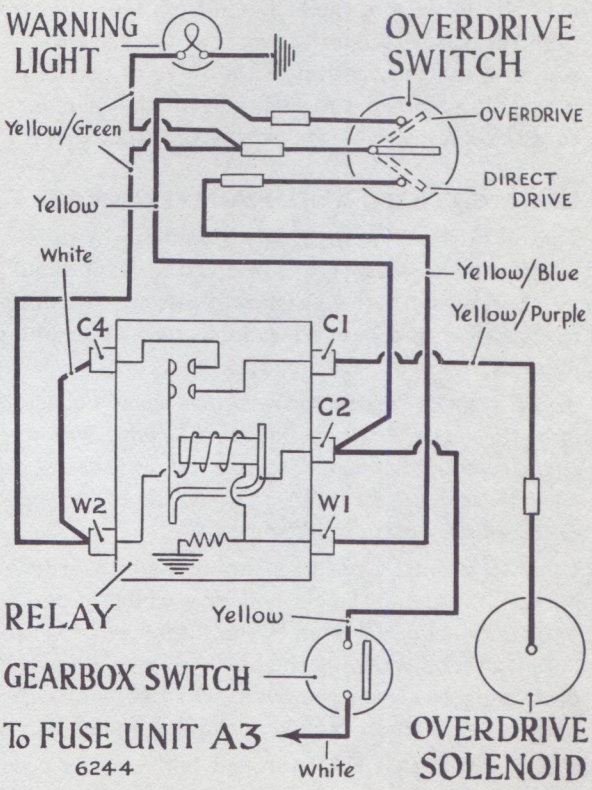

Fig. 17. *Circuit diagram (Series IV cars)*

overdrive switch will automatically return to the central position due to the action of the self-cancelling mechanism in the switch. Overdrive will remain engaged and the warning light illuminated, the relay coil being energised by the circuit still made by the closing of the contacts between C2 and C4 and the connection between C4 and W2.

When the overdrive switch is moved to the direct drive position, battery feed is applied to terminal W1, de-energising the relay coil. The contacts will open and the circuit to terminal C1 and the overdrive solenoid broken. Overdrive will disengage and the warning light will go out. The overdrive switch will return to the central position.

When the gear lever is moved out of the 3rd gear position the gearbox switch will open and the circuit from the fuse unit be broken. If overdrive had been engaged the relay coil will become de-energised, the contacts will open and overdrive will be disengaged. The warning light will go out. As the overdrive switch will have returned to the central position, it will be necessary to re-select overdrive, if required, after a gearchange is made from 2nd to 3rd gear. This ensures that overdrive is not engaged on changing from 2nd to 3rd gear.

Throttle (Inhibitor) Switch (Series I, II and III)

Adjustment

The cam plate operating the inhibitor switch is located in an elongated hole and can be turned in relation to the throttle lever, giving the cam greater or less travel across the plunger of the switch.

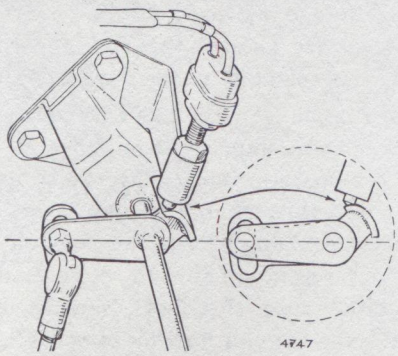

Fig. 18. *Throttle inhibitor switch*

To set the cam in approximately the correct position, open the throttle to about 60% of full throttle. The cam lever should then be adjusted so that the curved edge of the cam just makes contact with the plunger on the switch (see illustration) and then securely tightened.

The throttle linkage should then be operated to make sure that the switch is not being over-compressed by the cam. The whole adjustment must then be checked on a level road to ensure that with the column switch set at "overdrive", engagement takes place on allowing throttle opening at between 40—50 m.p.h. (54—80 k.p.h.) in top gear.

If this does not happen, then further adjustments must be made to the cam setting, the final adjustment being made by slackening the locknut on the threads of the switch body and rotating the switch clockwise for engagement at lower speeds or anti-clockwise for engagement at higher speeds. Do not omit to retighten the locknut.

GEARBOX SWITCH

If the gearbox switch is not operating correctly, its position in the gearbox cover can be adjusted by selection of aluminium washers.

On Series I, II and III cars the switch contacts should be closed in 2nd or top gears. On Series IV cars the switch contacts should be closed in top gear only.

To adjust

Disconnect battery.

Select top (high) gear.

Unscrew the switch from the gearbox casing and remove all washers. (See Parts Catalogue.)

Screw in switch, less washers, until it closes, as tested by Avo-Meter or battery and bulb.

Insert into the gap between switch and gearbox cover the number of washers which will freely enter.

Remove switch.

Fit these washers and tighten switch fully home.

Re-test switch operation in all gears.

DIAGNOSIS OF FAULTS

When positioning the vehicle for the removal of the Overdrive, care must be taken that the vehicle is *NOT* brought to a halt by stalling in gear.

When transmitting torque in forward direct drive, the rollers of the uni-directional clutch are forced towards the crest of the facets of the inner member, and if the vehicle is brought to a halt by stalling in gear, these rollers can lock in the drive position, thereby preventing the removal of the Overdrive unit.

If the overdrive unit does not operate properly, it is advisable first to check the level of oil and, if below the level mark, to top up with fresh oil and test the unit again before making any further investigations.

BEFORE COMMENCING ANY DISMANTLING OPERATIONS IT IS IMPERATIVE THAT THE OVERDRIVE IS OPERATED TEN TO TWELVE TIMES, WITH THE ENGINE STOPPED, IN ORDER TO RELEASE ANY HYDRAULIC PRESSURE FROM THE SYSTEM.

Faulty units should be checked for defects in the order listed below:—

Overdrive Does Not Engage

1. Insufficient oil in the gearbox.
2. Failure of switches or wiring (visually check solenoid operation).
3. Control mechanism out of adjustment.
4. Check hydraulic pressure.
5. If insufficient pressure, clean and re-seat oil pump non-return valve.
6. Damaged parts within the unit requiring removal and inspection of the assembly.

Overdrive Does Not Release

This calls for immediate attention. Do not reverse car, as use of reverse in overdrive, denoted by a tendency to stall, can cause extensive damage.

1. Control mechanism out of adjustment.
2. Solenoid sticking..
3. Blocked restrictor jet in operating valve.
4. Electrical circuit earthed.
5. Throttle switch faulty or needs adjusting.
6. Sticking clutch (can sometimes be freed by tapping casing with soft mallet.)
7. Damaged parts within the unit, requiring removal and inspection of the assembly.

Clutch Slip in Overdrive

1. Insufficient oil in gearbox.
2. Solenoid lever out of adjustment.
3. Insufficient hydraulic pressure due to pump non-return valve incorrectly seating.
4. Insufficient hydraulic pressure due to worn accumulator piston/housing or leaking "O" ring.
5. Operating valve incorrectly seating.
6. Worn or glazed clutch lining.

Clutch Slip in Reverse or Free-wheel Condition on Overrun

1. Check solenoid setting.
2. Blocked restrictor jet in valve.
3. Worn clutch linings.
4. Insufficient pressure on clutch due to broken clutch springs.

ADJUSTMENT OF CONTROLS

The operation of the controls can be checked by means of the setting lever on the right-hand side of the unit, accessible from under the car. The controls are operating correctly when a $\frac{3}{16}$" (4·8 mm.) diameter rod can be passed through the hole in the setting lever into the hole in the overdrive casing (see Fig. 19) with ignition switched on, top gear engaged, overdrive selected by the steering wheel switch, and throttle depressed.

If the solenoid operates, but does not move the setting lever far enough to allow the rod to be inserted, the solenoid plunger must be adjusted.

To adjust the plunger, remove cover plate (37, Fig. 14); slacken the clamp screw holding the solenoid lever to the operating shaft. Insert a $\frac{3}{16}$" (4·8 mm.) diameter rod through the setting lever, and into the overdrive casing. Push the solenoid plunger upwards as far as it will go, and retighten the clamp screw. Make sure that both setting lever and solenoid lever are pushed in towards the overdrive casing so that the oil seals are not allowed to

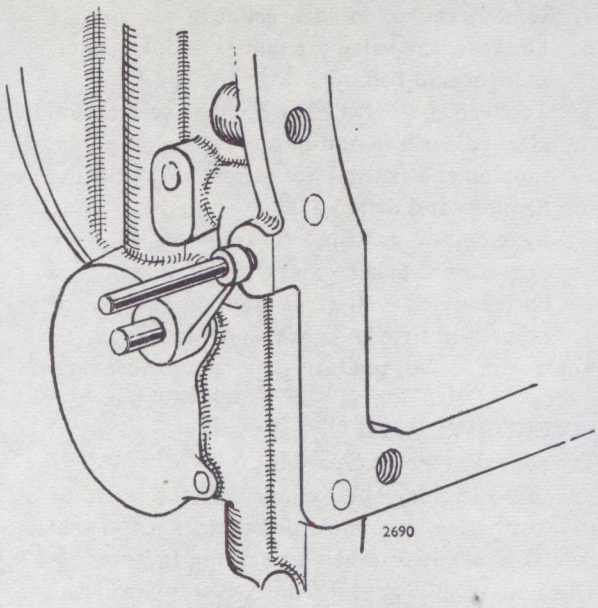

Fig. 19. *Checking setting lever position*

move outwards. (·008" (·2mm.) end float should be allowed to prevent seizure when hot.)

Ensure that with the control in the overdrive position the setting rod can be inserted, and that the solenoid current does not exceed 2 amperes.

If the current is maintained in the order of 17 amperes, it is an indication that the solenoid plunger is not moving far enough to switch from the operating to the holding coil, and the plunger must be readjusted. This is most important, as the solenoid will not stand a prolonged heavy discharge.

If the solenoid does not operate, the electrical circuits should be checked. A circuit diagram is shown in Figs. 16 and 17.

THE OPERATING VALVE (see Fig. 13)

To gain access to the operating valve, remove the front seats, carpets and floor cover plate.

Move the setting lever into and out of the overdrive position ten or twelve times to release hydraulic pressure.

Unscrew valve plug and lift out spring and plunger. The ball can then be removed with the aid of a magnet. The valve can be removed with a tapered piece of wood, but care must be exercised to avoid damage to the seating at the top of the valve.

Near the bottom of the valve will be seen a small hole breaking through to the centre drilling. This is the jet for restricting the exhaust of oil from the operating cylinders. Ensure that this jet is not choked.

To clean the valve, insert a $\frac{1}{8}$ in. drill down the centre bore of the valve and turn by hand. This has the effect of picking up any particles in the flutes of the drill. Finally blow out the valve.

We do not advise the use of grinding paste to re-seat this valve. To re-seat, place ball on a block of wood, position valve on ball and tap sharply. If the valve requires any further seating, replacement is advisable.

THE OIL PUMP

If the unit fails to operate and the ball valve is found to be seating and lifting correctly check that the pump is functioning.

Jack up the rear wheels of the car, then with the engine ticking over and the pump valve plug removed, see below, engage top gear. Watch for oil being pumped into the valve chamber. If none appears then the pump is not functioning.

The pump (Fig. 20) is of the plunger type and delivers oil via a non-return valve to the accumulator. Possible sources of trouble are (1) failure of the non-return valve due to foreign matter on the seat or to a broken valve spring and (2) breakage of the spring holding the pump plunger in contact with the cam.

THE PUMP VALVE

Access to the pump valve is gained through a cover on the left-hand side of the unit. Proceed as follows:—

1. Operate setting lever ten or twelve times, with the engine stopped, to empty accumulator. Remove the drain plug and drain off oil.
2. Remove cover plate and solenoid body.

3. Remove plunger upwards.
4. Slacken off clamping bolt and remove operating lever.
5. Remove distance collar from valve operating shaft.
6. The solenoid bracket is secured by two $\frac{5}{16}$" diameter bolts, the heads of which are painted red, and two nuts. *REMOVE THE NUTS FROM THE STUDS BEFORE TOUCHING THE BOLTS. THIS IS IMPORTANT.* The two bolts should now be slackened off together, releasing the tension of the accumulator spring.

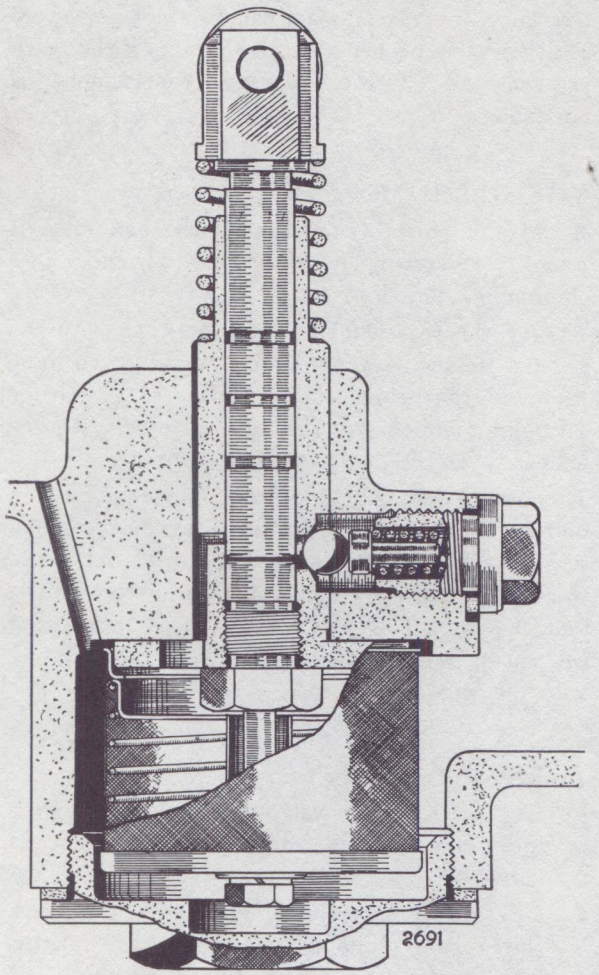

Fig. 20. *Oil pump. (On later units the filter is secured by the drain plug)*

7. Remove the solenoid bracket.
8. Unscrew the valve cap and take out the spring, plunger and ball.
   To clean this valve. The ball and seat should be cleaned with a non-lint type rag. Re-seat by tapping the ball on to its seat using a suitable hammer and drift.
   Reassembly is the reverse of the above operations. Ensure that the soft copper washer between the valve cap and pump housing is nipped up tightly to prevent oil leakage.

Reset the valve operating lever, proceeding as under "ADJUSTMENT OF CONTROLS".

OVERDRIVE UNIT

To remove from Gearbox

When positioning the vehicle for the removal of the Overdrive, care must be taken that the vehicle is *NOT* brought to a halt by stalling in gear.

The unit is split at the front cover plate (adaptor plate) which is attached to the front housing by six $\frac{5}{16}$" studs, two of which are extra long. The four nuts on the short studs should be removed before those on the longer studs are touched. The latter should be unscrewed together releasing the compression of the overdrive clutch springs. Ensure that the long studs are not unscrewing out of the casing. The unit can then be drawn off the mainshaft, leaving the front cover plate on the gearbox.

To refit to Gearbox

If the gearbox has been stripped, the mainshaft must be pressed fully to the rear before the stemwheel is fitted. On Series I and II cars the correct distance piece and circlip must then be fitted behind the rear bearing to retain the mainshaft in position. Four alternative distance pieces are available for selective assembly. On Series III and IV cars the mainshaft is retained by a nut and washer.

When fitting the overdrive unit, the pump plunger spring must be compressed so that the roller does not strike the edge of the cam. This can best be achieved by tying down the plunger with a length of soft iron wire passed over the plunger behind the roller (see Fig. 21).

Before the overdrive unit is fitted to the gearbox the splines of the planet carrier and uni-directional clutch must be in line.

A dummy mainshaft (VLC. L.185A), will assist in this process.

The gearbox should be firmly mounted in a stand or in a vice and top gear engaged. Turn the mainshaft until the Woodruff key slot is to the top of the unit as mounted in the car, *i.e.* opposite to the straight edge of the front cover plate.

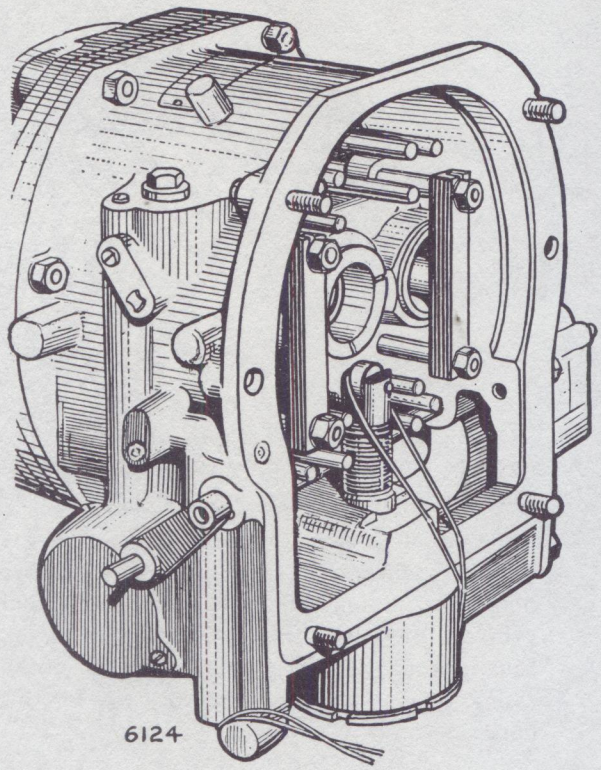

Fig. 21. *Method of tying down pump plunger*

Remove the twelve springs from the overdrive unit and offer up the unit to the gearbox without disturbing the setting of the internal splines, *i.e.* without turning the coupling driver.

It may be necessary to turn the mainshaft a little one way or the other to engage the splines. When the splines have been engaged the overdrive unit should be pushed as far as possible towards the gearbox without trapping the wire holding the pump plunger.

The splines will now be lined up correctly, and it is most important that neither the gearbox mainshaft nor the overdrive coupling driver is turned until the unit is fitted to the gearbox.

Withdraw the overdrive unit from the mainshaft, and fit the twelve springs. Note that the four short springs are fitted to the inside pegs. Make sure that the pump plunger is still held firmly down. Fit the Woodruff key to the slot in the gearbox mainshaft, and slide on the cam, sleeve end first, until the end of the sleeve is about halfway along the key (see Fig. 22). Note that the back of the cam will now be adjacent to the pump plunger. Take care not to displace the Woodruff key.

Place the overdrive unit in position on the mainshaft. Make sure that the springs are in position on the pegs on the front cover plate, and push the overdrive unit forward until the nuts can be engaged on the two long studs. Tighten these two nuts evenly until the overdrive unit is within about $\frac{1}{8}$" (3 mm.) of the fitted position, then withdraw the wire to release the pump plunger. Fit spring washers and nuts to the four short studs, and tighten fully. Remove the nuts from the long studs and refit with spring washers.

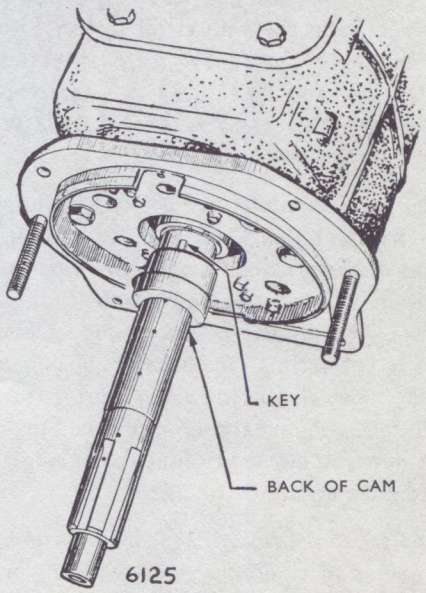

Fig. 22. *Pump cam and key*

LAYCOCK/DE NORMANVILLE OVERDRIVE OVERHAULING INSTRUCTIONS

Special Tools

A complete range of Rootes Group Special Tools is available for overhauling the Overdrive Unit as detailed in Section "S".

To dismantle

Assuming that the overdrive front cover has been retained on the gearbox as previously described, dismantle the overdrive unit in the following order, with the front end uppermost:—

1. Remove the twelve clutch springs from their pins, noting that the four springs nearest to the centre of the unit are shorter than the eight outside springs.
2. Remove the operating valve, as previously described. This will allow air to enter the cylinders of the operating and accumulator pistons and will thus facilitate removal of these pistons.
3. Release the lockwashers securing the two $\frac{1}{4}$" nuts retaining the operation piston bridge pieces. Remove the nuts, lockwashers and bridge pieces and withdraw the operating pistons by gripping their central spigots with a pair of pliers.
4. Remove the solenoid body and plunger. Slacken clamping bolt and remove operating lever and distance collar from valve operating shaft. Remove the two nuts and then the two red painted bolts securing the solenoid brackets to the casing. *The bolts are of sufficient length to allow the accumulator spring to be gradually released, and should always be removed after the nuts.* Remove accumulator spring and tube. Remove accumulator piston.
5. Insert special tool (VLC. L.216) into accumulator cylinder and tighten the lower wing nut. Withdraw accumulator cylinder complete, applying a rotary pull to the upper wing bolt of the tool. The assembly should then be placed in a clean container to avoid soiling or damaging the rubber sealing rings.

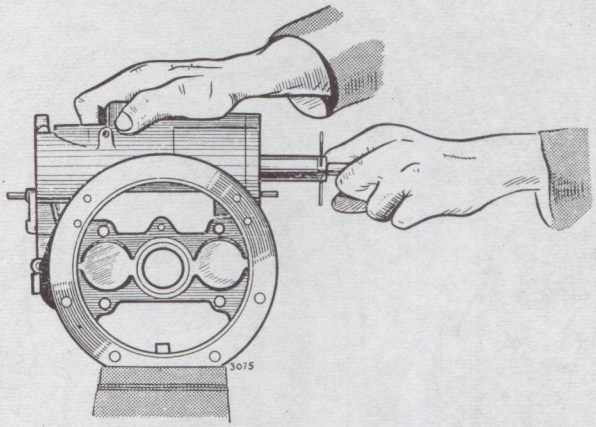

Fig. 23. *Removing accumulator cylinder*

6. Remove the oil pump valve, taking care of the small spring, plunger and ball.
7. If the oil pump has to be removed, remove the drain plug, filter, two retaining screws and base plug from oil pump body and screw special tool (VLC. L.183A) fully into the base plug thread thus exposed. Draw the pump body out of the casing, turning the wing nut clockwise for this purpose.

Note

The pump valve must be removed before attempting to withdraw the pump body.

8. Remove the six $\frac{5}{16}$" nuts and separate the two halves of the housing. The brake ring is spigoted into each half and should come away with the front half. A few light taps with a mallet, around its flange, will remove the ring from the casing.
9. Remove one bronze and one steel thrust washer from the forward end of the sunwheel, noting their positions. (The bronze washer is nearest to the sunwheel.)

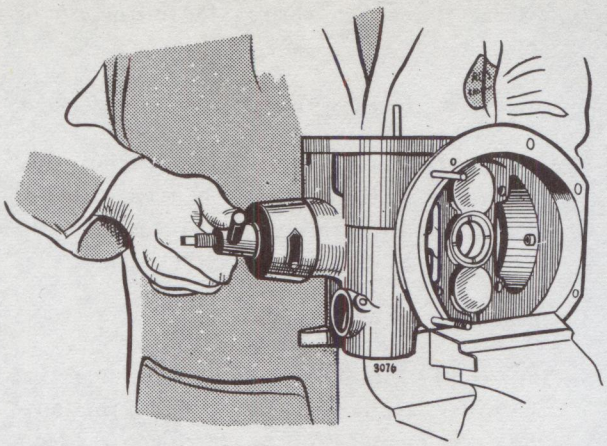

Fig. 24. *Removing oil pump body*

10. Lift out the clutch sliding member complete with the thrust ring and bearing.

11. Remove the thrust ring complete with bearing from the sliding cone clutch member by withdrawing the circlip from its groove in the forward end of the clutch hub, and pressing out the clutch member. Care must be taken not to distort the clutch member or damage the linings.

12. Remove the thrust bearing from the thrust ring by removing the large circlip and pressing out the bearing.

13. Lift out the sun-wheel and bronze thrust washer situated between the rear end of the sun-wheel and the recess in the planet carrier hub.

14. Remove planet carrier assembly.

15. Place fitting ring (VLC. Special Tool L.178) centrally over the three lugs on the front face of the annulus and lift the inner member of the uni-directional clutch into it. This will ensure that the rollers do not fall out of the inner member. Remove the fitting ring and place the parts in a suitable container. Remove the spring ring, located between the hub and the cage.

16. Remove the bronze thrust washer fitted between the clutch inner member and the front face of the annulus.

17. To remove annulus, first draw off the coupling flange from its splines at the rear of the unit (VLC. Special Tool RG.55).

18. Remove oil seal (if necessary) by screwing the taper thread of the outer member of special tool (VLC. L.176A) into it and tightening the centre bolt against the rear of the tail shaft.

19. Remove the speedometer drive pinion and bush, located by one dowel screw.

20. Press or drive out the annulus and tail shaft from the back, taking care not to damage the

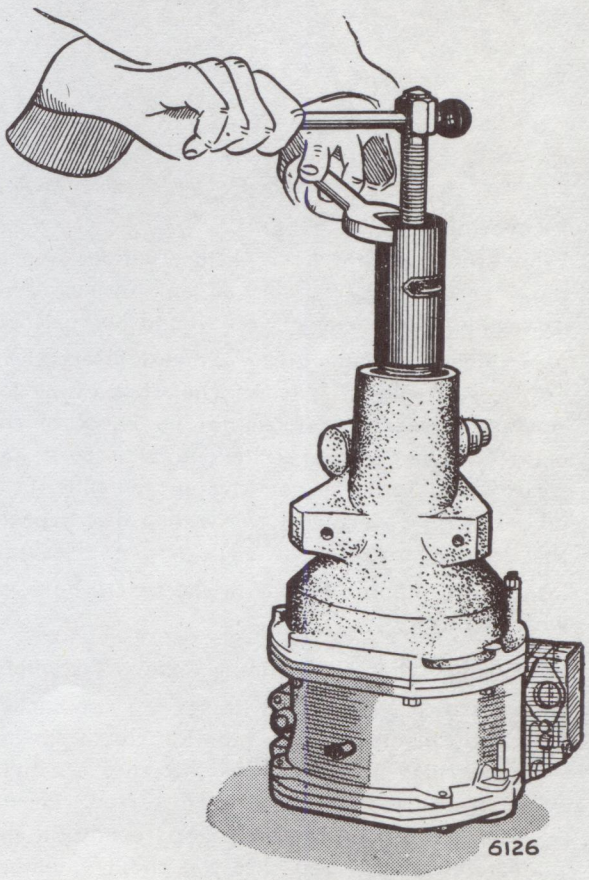

Fig. 25. *Removing oil seal*

thread on the end of the shaft. The front bearing will come away with the shaft leaving the rear bearing in the housing.

21. Remove the distance collar from its shoulder in front of the splines.
22. Draw off front bearing, using special tool VLC. L.187. Drive out rear bearing from end of casing.
23. If the front shaft bearing is withdrawn from the annulus, a new bearing **must** be fitted.

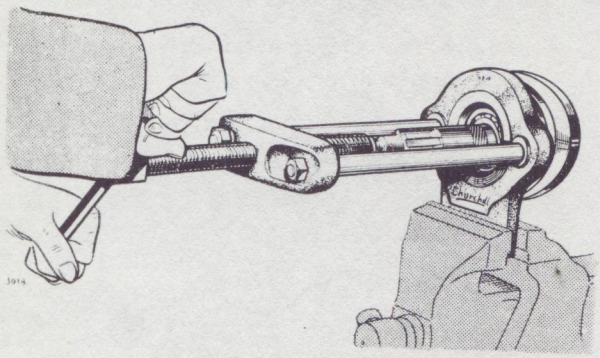

Fig. 26. *Removing front bearing from annulus and tail shaft*

Inspection

When the unit has been dismantled, each part should be thoroughly cleaned and inspected to determine whether any parts should be replaced. As a guide, the planned new dimensions are given on pages 33 and 34. Inspect the front casing for cracks, damage, etc. Examine the bores of the operating cylinders and accumulator for scores and wear. Check for leaks from the plugged ends of the oil passages. Ensure that the sealing disc beneath the accumulator bore is tight and not leaking. Inspect the support bushes in the centre bore for wear and damage.

1. Examine the clutch sliding member assembly. Ensure that the clutch linings are not burned or worn. Inspect the pins for clutch springs and bridge pieces and see that they are tight in the thrust ring and not distorted. Ensure that the ball bearing is in good condition and rotates freely. See that the sliding member slides easily on the splines of the sun-wheel.
2. Inspect the clutch springs for distortion or collapse.
3. Inspect the teeth of the gear train for damage.

   If the sun-wheel bush is worn, the gear will have to be replaced, since it is not possible to fit a new bush in service, because it has to be bored to the pitch line of the teeth.
4. Inspect thrust washers.
5. Inspect the uni-directional clutch. See that the rollers are not chipped and that the inner and outer members of the clutch are free from damage. Make sure that the outer member is tight in the annulus. Ensure that the spring is free from distortion.
6. Inspect the ball bearings on the output shaft and see that there is no roughness when they are rotated slowly.
7. Inspect the mainshaft splines for nicks and burrs. See that the oil holes are open and clean, and that the end plugs are fitted.
8. Inspect the oil pump for wear on the pump plunger and roller pin. Ensure that the plunger spring is not distorted. Inspect the valve seat and ball and make sure that they are free from nicks and scratches.
9. Inspect the operating valve for distortion and damage and see that it slides easily in its bore in the front casing.
10. Inspect the planet carrier and gears, for tooth and bearing wear.

Planet Carrier Assembly

This assembly will not normally require attention until the need for a general overhaul arises, when an exchange unit should be obtained.

Reassembling the Unit

The unit can be assembled after all the parts have been thoroughly cleaned and checked to ensure that none are damaged or worn.

Jointing compound should be used on the brake ring, tail and main case mating faces, before the two halves of the casing are assembled.

If the tail shaft bearings are being replaced, the thickness of the spacing washer between them must be checked in the following manner, in order to obtain a condition in which no pre-loading and no end float exist:—

Use VLC Special Setting Gauge (L.190A).

This gauge consists of an outer tubular member, the lower end of which locates against the rear bearing abutment shoulder in the overdrive rear casing, and an inner tubular member of equal length, the bore of which is of sufficient size just to pass over the rear bearing inner track location on the output shaft, so that the lower end will abut against the spacing washer to be selected.

With the correct spacing washer, the inner tube should stand higher than the outer tube by ·005″/·010″ (·13/·25 mm.). This gap of ·005″/·010″ (·13/·25 mm.) ensures selection of a spacing washer to avoid end load on the bearings due to warming up and expansion of the casing.

Using VLC. Tool L.186 press the new front bearing fully on to the output shaft and press the output shaft assembly into the casing, ensuring that the front bearing outer track abuts against its shoulder in the casing. Do not yet fit the rear bearing.

Fit the spacing washer.

Insert the gauge over the output shaft until the outer member contacts the rear bearing shoulder in the casing. Press down the inner member on to the washer and place a straight edge across the top of the gauge.

Check with feelers that the inner tube stands ·005″/·010″ (·13/·25 mm.) higher than the outer.

The spacing washer is available in different thicknesses (see page 34) for selective assembly, and one of correct thickness can now be fitted.

Fit the rear bearing.

Using special tool (VLC. L.177A) drive the new oil seal into the rear casing from the rear.

Replace the thrust washer and uni-directional clutch inner member with its rollers and cage. A fixture is needed for retaining the rollers in position when assembling the clutch. Ensure that the spring is fitted correctly so that the cage urges the rollers up the ramps on the inner member.

This same fixture (VLC. special tool L.178) is used for initial assembly of the rollers into the clutch.

In order to determine the amount of end float of the sun-wheel, which should be ·008″ to ·014″ (·20 to ·35 mm.), an extra thrust washer of known thickness should be assembled with the two normally used in front of the sun-wheel. Care must be taken to ensure that the thrust washers at the front and rear of the sun-wheel are replaced in their correct positions. At the front of the sun-wheel the steel washer fits next to the head of the support bush in the housing and the bronze washer between the steel one and the sun-wheel. At the rear, a single bronze washer is used.

Fit the planet carrier, with its planet gears, over the sun-wheel with the marked teeth of the planets radially outwards as shown in Fig. 30, and with the assembly in this position, offer it up to the annulus.

Turn the planet carrier to line up the splines with those in the uni-directional clutch. Fit the dummy

mainshaft (L.185A), which should be left in place until reassembly is complete.

Fit the brake ring to the front casing and tap fully home. Fit the front casing over the dummy mainshaft and offer it up to the rear casing. Due to the extra thrust washer previously mentioned, the two casings will not meet fully at their flanges.

The gap between the flanges of the brake ring and rear casing should be measured. This gap will equal the thickness of the extra thrust washer minus the end float of the sun-wheel. To find the end float, subtract the reading, after measuring the gap, from the thickness of the extra thrust washer fitted. If this is between the limits specified, the unit may be stripped down again and re-assembled without the extra thrust washer.

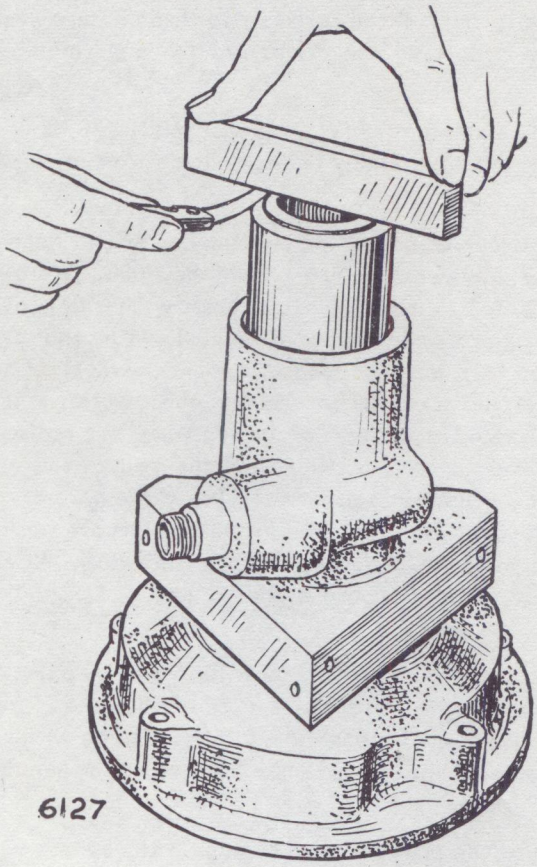

Fig. 27. *Use of spacing washer gauge*

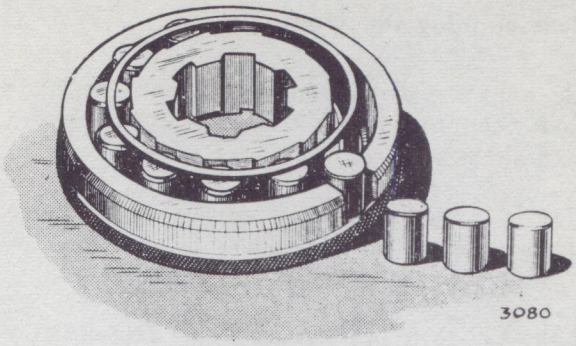

Fig. 28. *Assembling roller clutch*

If the indicated end float is more or less than that required, it must be adjusted by replacing the steel thrust washer at the front of the sun-wheel by one of less or greater thickness, as required (see page 34 for thickness available).

The clutch sliding member must be replaced now if this has been dismantled for renewal of the thrust bearing, it should be assembled as follows, taking care not to damage the cone member:—

Press bearing evenly into thrust ring.

Fit large circlip.

Press thrust assembly on to hub of cone member and fit smaller circlip.

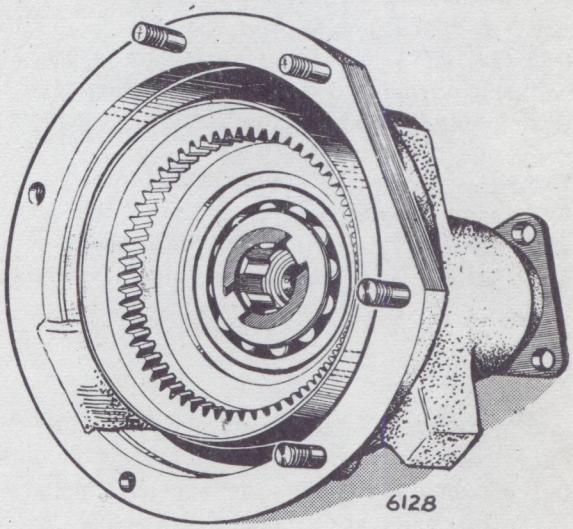

Fig. 29. *Roller clutch in position*

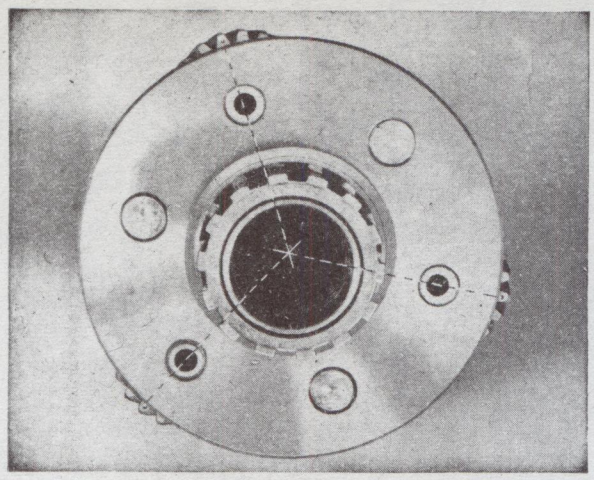

Fig. 30. *Markings on planet gear teeth*

The two halves of the casing can now be assembled together. Using special tool (VLC. L.180), fit operating pistons into their cylinders. Fit bridge pieces and secure with the four nuts and new lockwashers.

Using special tool (VLC. L.218), refit accumulator piston into its cylinder (use VLC. L.179 on Series IV cars).

The O-rings can now be fitted into their grooves around the accumulator cylinder, using special tool (VLC. L.217), (use L.181 on Series IV cars).

Replace piston and cylinder in accumulator housing, using special tool (VLC. L.216), (L.182 on Series IV cars).

The oil pump body and plunger can now be refitted. Place the plunger into pump body so that the flat side of the roller fork will engage with the front thrust button below the carrier bush in the casing when the valve seat in the body corresponds with the valve drilling in the casing. Screw the two guide pegs of special tool (VLC. L.184) into the tappings for the cheese-headed screws in the casing and locate the two holes in the pump body flange over these pegs. Drive the pump body into position with the drift supplied with the above tool. Fit base plug.

Remove the guide pegs and fit pump-locating screws.

Refit filter and drain plug.

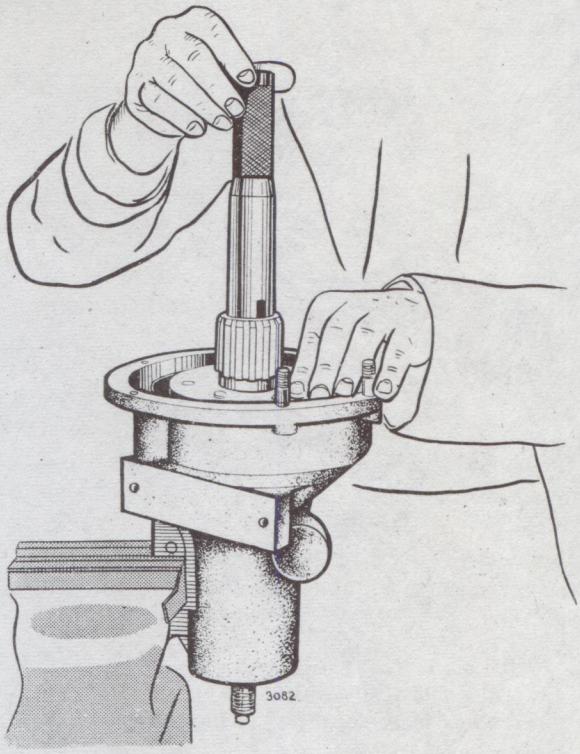

Fig. 31. *Dummy mainshaft*

Refit the pump valve, plunger, spring and plug, using a new copper washer.

Refit the accumulator springs and tube. Refit solenoid bracket, taking care not to displace the oil seal around the valve operating shaft, gradually compressing the accumulator spring with the two long bolts. Fit nuts, distance washer, operating lever, plunger and solenoid.

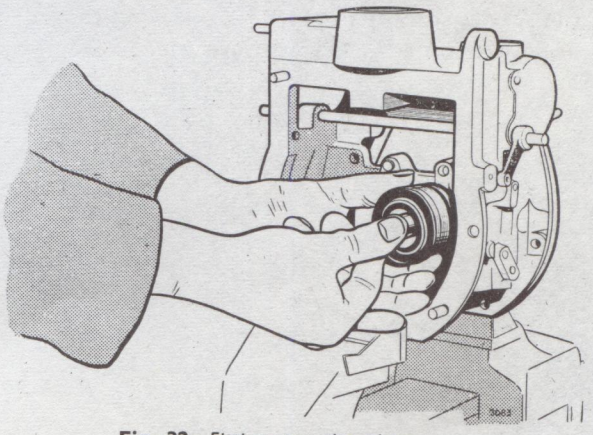

Fig. 32. *Fitting operating piston*

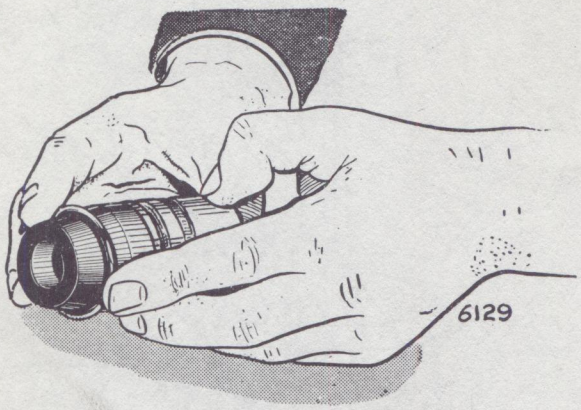

Fig. 33. *Fitting O-ring*

Refit the operating valve. After replacing the thrust springs the unit is ready for refitting to the gearbox.

Note

The eight long springs fit on to the outer pegs of the thrust ring. Incorrect fitting of the springs will render them coilbound.

After fitting the units to the car, the setting lever and solenoid plunger adjustments must be checked, as previously described.

Testing Oil Pressure

Release the hydraulic pressure by operating the overdrive control ten or twelve times with the ignition on, throttle depressed and top gear engaged.

Remove the operating valve plug and fit in its place the special adaptor (VLC. L.188), leaving the valve in position. Use an oil pressure gauge reading to

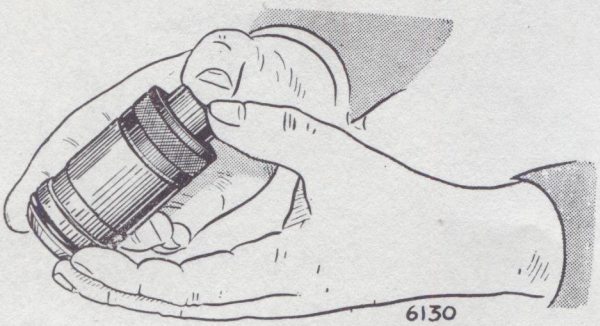

Fig. 34. *Fitting accumulator piston*

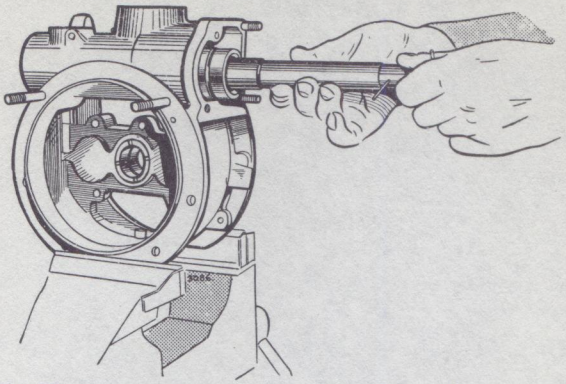

Fig. 35. *Fitting accumulator cylinder and piston into main casing*

800 lb. per sq. in. (56 kg. per sq. cm.) using a pipe union to fit the $\frac{1}{4}$" B.S.P. internal thread in the adaptor.

Jack up the rear wheels of the car, start the engine and engage overdrive and top gear with the engine ticking over slowly.

A pressure of 580 lb. per sq. in. (41 kg. per sq. cm.) should be recorded.

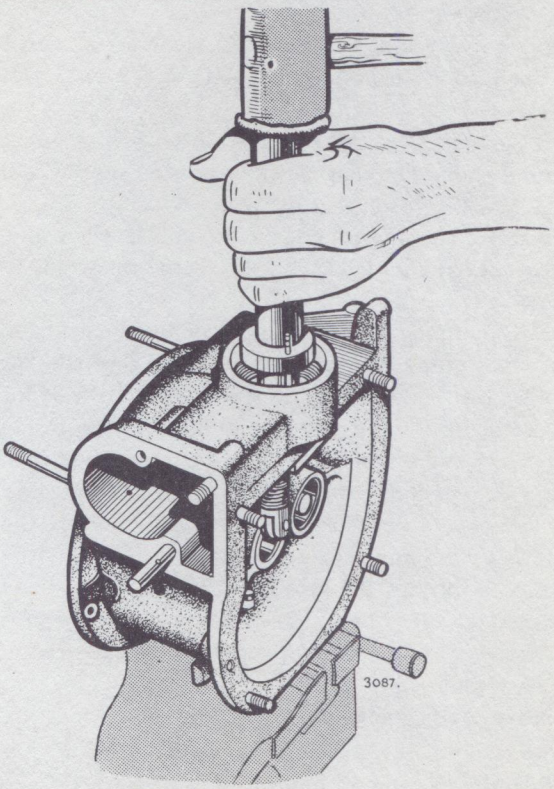

Fig. 36. *Refitting pump body*

OVERDRIVE UNIT—DIMENSIONS & TOLERANCES

Parts and Description	*Dimensions New*	*Clearance New*
Pump		
Plunger diameter	$\frac{3}{8}$″ —·0004″ (9·525 —·010 mm.)	
	—·0008″ (—·020 mm.)	
Bore for plunger in pump body ...	$\frac{3}{8}$″ +·0008″ (9·525 +·020 mm.)	+·0016″ (+·040 mm.)
	—·0002″ (—·005 mm.)	+·0002″ (+·005 mm.)
Plunger spring fitted load at top of stroke	9 lbs. 7½ ozs. (4·29 kgs.)	
Valve spring load	2⅝ lbs. at $\frac{19}{32}$″ long (1·193 kgs. at 15 mm.)	
Pin for roller	$\frac{1}{4}$″ ±·00025″ (6·350 +·006 mm.)	
Bore for pin in roller	$\frac{1}{4}$″ +·002″ (6·350 +·050 mm.)	+·0023″ (+·058 mm.)
	+·001″ (+·025 mm.)	+·0008″ (+·020 mm.)
Gearbox Mainshaft		
Shaft diameter at steady bushes ...	$1\frac{5}{32}$″ —·0009″ (29·37 —·023 mm.)	
	—·0018″ (—·046 mm.)	
Steady bush internal diameter ...	$1\frac{5}{32}$″ +·003″ (29·37 +·076 mm.)	+·0048″ (+·122 mm.)
	+·002″ (+·050 mm.)	+·0029″ (+·073 mm.)
Shaft diameter at sun-wheel bush ...	$1\frac{5}{32}$″ —·0009″ (29·37 —·023 mm.)	
	—·0018″ (—·046 mm.)	
Sun-wheel bush internal	$1\frac{5}{32}$″ +·002″ (29·37 +·050 mm.)	+·0048″ (+·122 mm.)
	+·003″ (+·076 mm.)	+·0029″ (+·073 mm.)
Shaft diameter at rear steady bush ...	$\frac{5}{8}$″ —·0008″ (15·875—·020 mm.)	
	—·0015″ (—·038 mm.)	
Rear steady bush internal diameter ...	$\frac{5}{8}$″ +·001″ (15·875+·025 mm.)	+·0025″ (+·063 mm.)
	—·000″ (—·000 mm.)	+·0008″ (+·020 mm.)
Gear Train		
End float of sun wheel		·008″ to ·014″ (·020 to ·036 mm).
Piston Bores		
Accumulator bore	1½″ ±·0005″ (38·1±·013 mm.)	
Operating piston bore	1⅜″ ±·0005″ (34·925±·013 mm.)	

Parts and Description	*Dimensions New*	*Clearance New*
Miscellaneous		
Clutch movement, $\frac{1}{16}$" (1·59 mm.) from direct to overdrive	Allowance for $\frac{1}{8}$" (3·2 mm.) wear of direct drive clutch	Allowance for wear $\frac{1}{8}$" (3·2 mm.) overdrive clutch
Clutch spring free length	Outer springs $4\frac{9}{16}$" (116 mm.)	
	Inner springs $4\frac{13}{32}$" (112 mm.)	
Pump plunger spring	Free length 2" (51 mm.)	
Annulus Spacing Washer		
Thickness	·146" (3·71 mm.)	
	·151" (3·84 mm.)	
	·156" (3·96 mm.)	
	·161" (4·09 mm.)	
All ± ·0005" (·013 mm.)	·166" (4·22 mm.)	
	·171" (4·34 mm.)	
	·176" (4·47 mm.)	
Sun-wheel Thrust Washer		
Thickness	·077"—·078" (1·95—1·98 mm.)	
	·083"—·084" (2·11—2·13 mm.)	
	·089"—·090" (2·26—2·28 mm.)	
	·095"—·096" (2·41—2·44 mm.)	
	·101"—·102" (2·56—2·59 mm.)	
	·107"—·108" (2·72—2·74 mm.)	
	·113"—·114" (2·87—2·89 mm.)	

FRONT SUSPENSION

SECTION F

CONTENTS

Page

DESCRIPTION 3

ROUTINE MAINTENANCE 4

STEERING ALIGNMENT SETTING AND OPERATIONS 5

—Preparation of car 5

—Tools and appliances 7

—Camber angle 7

—Camber adjustment shims 8

—Front wheel alignment (toe-in) 8

—Castor angle 9

—King pin inclination angle 10

—Ackerman angles (toe-out on turns) 10

—Setting outer track rods 11

TO REMOVE AND REFIT, SUSPENSION ASSEMBLY 13

DISMANTLING AND REASSEMBLY, FRONT SUSPENSION 14

—Front hub bearings 14

—Front shock absorbers 15

—Stabiliser bar 16

—Stub axle carrier 17

—Front spring 17

—Upper wishbone link 18

—Lower wishbone link 19

—Lower fulcrum pin brackets 19

STEERING LINKAGE ... ... **See Section J**

Page

SERVICE OPERATIONS **21**

—Stub axle carrier threaded bushes—To remove and refit **21**

—King pins—to remove **21**

—to refit **22**

—King pin thrust washers—to refit **23**

—King pin bushes—to renew **24**

—Welch washers **24**

—Servicing front hubs **24**

—Front springs—To check height **24**

ACCIDENTAL DAMAGE **25**

—Steering arm dimensions **25**

—Wheel lock angles **25**

—Ball pin heights **26**

—Diagnosing steering faults **26**

DICTIONARY OF TERMS **27**

GAP GAUGES **28**

—Dimensions for front **28**

—Template for rear **29**

BALL PIN HEIGHTS **30**

—Checking fixture **30**

—Details for manufacture **31**

—Dimensions and positions for checking ball pin heights **32**

CROSSMEMBER MOUNTINGS **33**

SPECIAL CARS (SERIES V ONWARDS) **34**

FRONT SUSPENSION

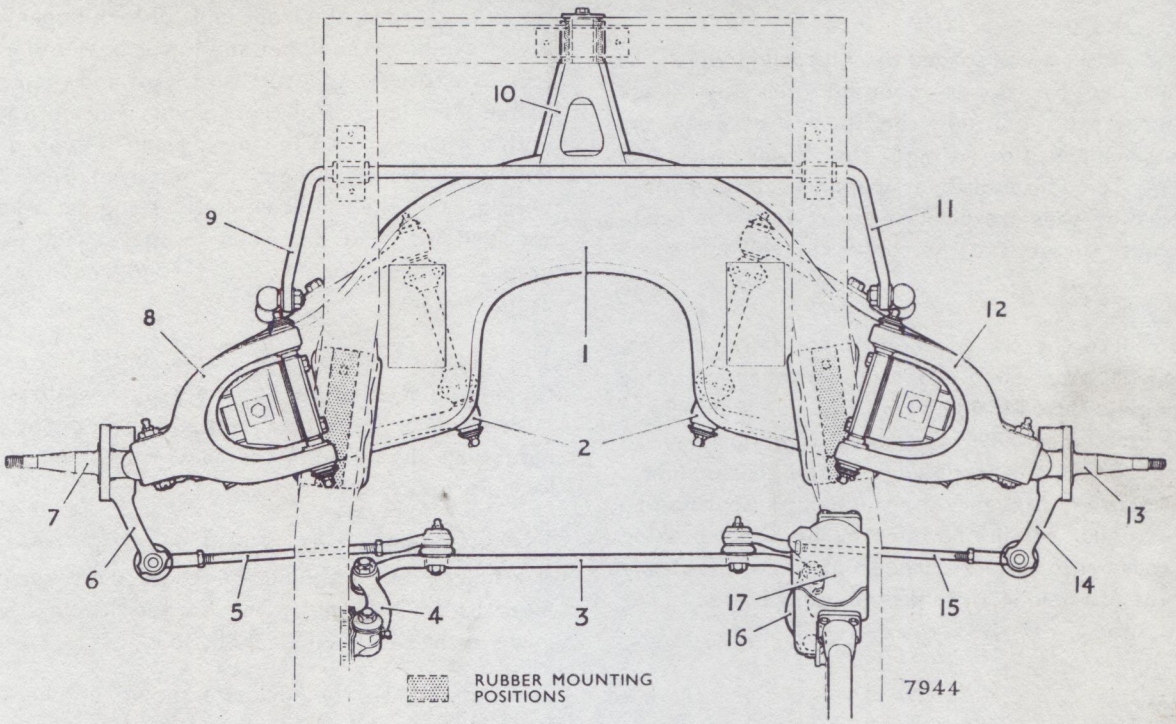

1 CROSSMEMBER
2 LOWER WISHBONE LINKS
3 CENTRE TRACK ROD
IDLER UNIT
5 & 15 OUTER TRACK RODS
6 & 14 STEERING ARMS
7 & 13 STUB AXLES
8 & 12 UPPER WISHBONE LINK
9 & 11 STABILISER BAR
10 STEADY ARM
16 SWING LEVER (DROP ARM)
17 STEERING BOX

Fig. 1. *Plan view of front suspension fitted to Series V and Imperial cars onwards. In the instance of Series I to IV cars, the steady arm was rectangular in shape with a rubber pad above and below the arm within a "U"-shaped clamp and retaining plate*

DESCRIPTION (Fig. 1)

The front suspension is of the coil spring and trailing wishbone type consisting of two independent units, each employing upper and lower wishbone links of unequal lengths. The wishbone links are attached to a pressed steel crossmember at their widest ends by fulcrum pins.

Shims are interposed between the upper fulcrum pins and the crossmember turrets to facilitate setting the camber angle. Special spacer washers are included in the lower fulcrum pin brackets to facilitate their attachment to the underside of the crossmember.

Both lower wishbone links are interconnected by short vertical links to a rubber mounted stabiliser bar beneath the front of the car underframe.

Road shocks are absorbed by coil springs which are controlled by rubber mounted telescopic shock absorbers fitted inside the springs between the crossmember turrets and the lower wishbone links. To reduce road surface noises, thick rubber insulating pads are positioned between the crossmember turrets and the top of the coil springs.

To reduce the transmission of noise still further, the front suspension is bolted to rubber mounting assemblies fitted inside both front side members of the car underframe. A steady arm, forming an extension on the front edge of the crossmember, prevents any tendency for the front suspension to twist under conditions imposed by heavy braking or rough road surfaces. The front end of the steady arm is also held in a rubber mounting bolted to the underframe.

The following differences between the front suspension of Series I to IV cars are as follows:—

ROUTINE MAINTENANCE

The components requiring lubrication are both ends of the upper and lower fulcrum pins and both outer track rods, the front ends of each upper and lower eye-bolt, the upper and lower bosses of each stub axle, the swing lever ball socket and the body of the idler lever. All these points are lubricated with a grease gun. The steering unit is topped up with oil. The front hubs are removed, repacked with grease, the endfloat checked and set within specified limits as described in subsequent paragraphs. See Section "P" for recommended lubricants.

The shock absorbers are sealed and require no topping up at any time but the rubber washers or bushes which form part of the top and bottom mountings should be inspected at regular intervals for deterioration.

The crossmember, upper and lower fulcrum pin attachment bolts should be checked at regular intervals for tightness, the torque loadings are given in the "General Data Section".

The outer track rod locknuts should be checked for tightness and the ball sockets are centrally disposed on the ball pins.

ITEM	*SERIES*	
Brakes	I	Drum brakes, front and rear
	II and III	Disc brakes, front only; fitted to the rear of the stub axles
	IV	Disc brakes, front only; fitted to the front of the stub axles
Shock absorbers	I and II	Stem fittings, top and bottom
	III and IV	Stem fitting at the top, eye fitting at the bottom
Front springs	For all cars	See "General Data Section" which gives spring data
Bump rubbers	I and II	One rubber on each lower link (Two rubbers on export models
	III	Two rubbers on each lower link
	Late III and IV	Single large rubber on each lower link

STEERING ALIGNMENT SETTINGS AND OPERATIONS

In the following paragraphs, detailed instructions are given for checking and correcting the front wheel camber angle and alignment (toe-in), followed by checking castor and king pin inclination angles.

To avoid inaccuracies in the steering geometry and subsequent excessive tyre wear, all checks and adjustments must be made with the car in the static loaded condition.

As a considerable amount of weight is required (approximately 750 lbs., 340 kgs.) it makes the work arduous and at times impracticable for some Service Repair Shops.

To facilitate the loading of the car, it is weighed down only at the front end on to metal gap gauges inserted within the two suspension units. Hardwood gap gauges are inserted between the rear axle and the axle bump rubber to position the rear of the car.

To check the front suspension data as given in the "GENERAL DATA SECTION", **the car must be loaded on to the front and rear gap gauges.** When in this condition the quoted angles are equivalent to the angles obtained with the car in a fully and evenly laden condition with the exception of the castor angle; the figure quoted for this is calculated to take account of the nose down attitude of the car.

PREPARATION OF CAR (Fig. 2)

When checking the front suspension and steering dimensions, the following requirements must be met.

1. The car must be placed on a perfectly level floor or ramp.
2. The tyres must be inflated to the fully loaded pressures and have the same amount of wear.
3. Both front wheels must be checked for "run-out". Spin the front wheel while holding a piece of chalk close to the side wall of the tyre. Move the chalk progressively nearer until it makes contact thus the points of maximum "run-out" will be marked; the centres of which are then marked with a cross.

   Always set the front wheels so the points of maximum "run-out" are well away from the contact points of any gauges that may be used. Therefore when checking camber, castor or king pin inclination angles, set the "high spots" horizontally opposite each other and when checking front wheel alignment (toe-in) set them vertically.
4. The front and rear of the car must be loaded down on to four gap gauges by placing weights on the front of the car. The approximate weight required is 360 lbs. (163 kgs.) evenly distributed on each side of the car.

   At the front, steel gap gauges are positioned between the lower links and the bump rubber stops; for Series I to early III cars over the bump rubber, for later Series II cars onwards, just inboard of the bump rubber pans and kept vertical by the side extensions resting on the rear ends of the bump rubbers.

   At the rear, hardwood gap gauges are positioned between the top of the axle casing and the axle bump rubbers; the gauges are shaped to clear the hydraulic pressure pipes, the bump rubbers and fit round the rear axle.

   Normally the rear end of the car has to be lifted by hand to enable the rear gap gauges to be positioned and subsequently gripped in position by the lowering of the car. When it is found that the gap gauges are a slack fit, a small weight can be placed on the rear of the car to bring it down on to the gap gauges.
5. Keep the front wheels in the straight ahead position and gently move the car forward; the front wheels onto the turntable gauges and the rear wheels onto wooden ramps the same thickness as the turntable gauges. Stop the car without applying the brakes, so the free condition of the turntable gauges is not disturbed. Lock all four wheels by blocking the brake pedal in the "on" position.

   The two sets of gap gauges can be made in most Service Repair Shops. Dimensions and instructions for the gap gauges are given in illustrations at the back of this Section.

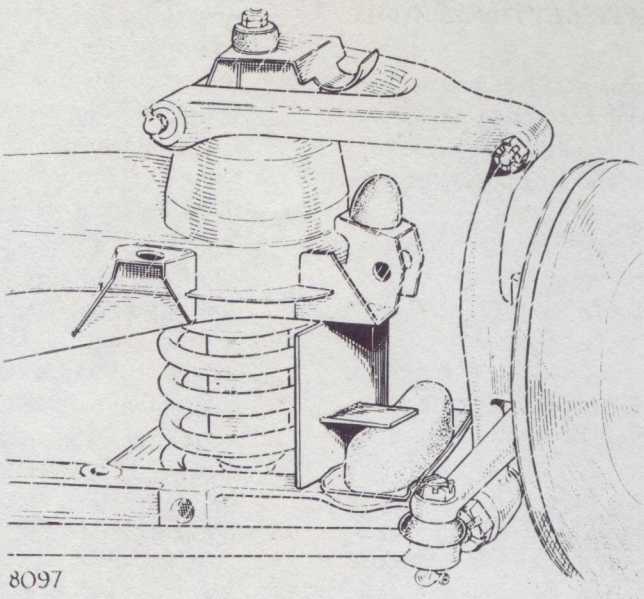

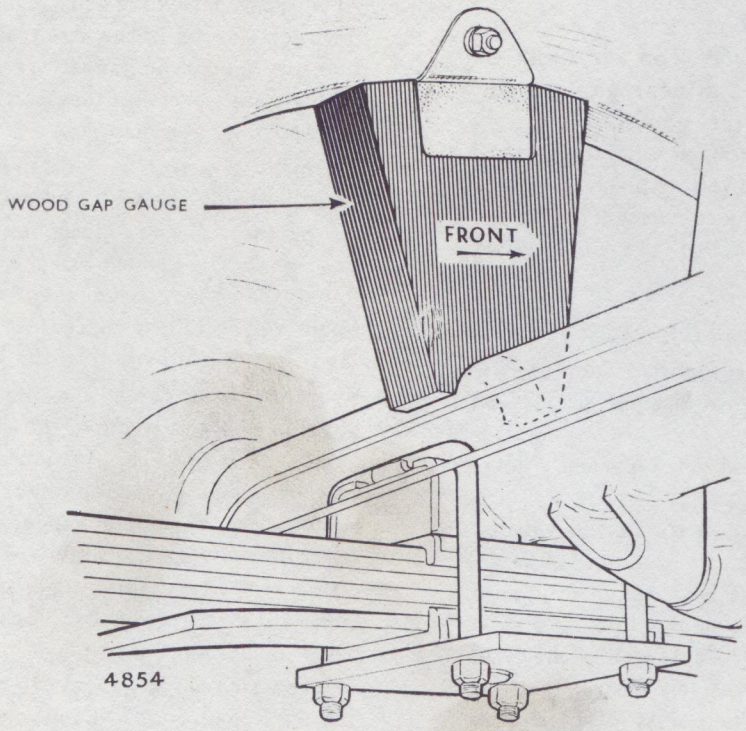

Fig. 2. *Front steel gap gauge in position between the arm of the lower link and the bump roller stop*
Rear hardwood gap gauge in position between the top of the rear axle casing and the axle bump rubber

TOOLS AND APPLIANCES

There are many types of tools and appliances available for use in the maintenance and overhaul of the front suspension and checking steering linkage.

In every case it is important that the particular manufacturer's instructions should be carefully observed.

Any reputable brand of equipment may be used.

The special tools mentioned in this Section are obtainable from Messrs. V. L. Churchill and Co. Ltd. A full list will be found in Section "S" of this Manual.

The following equipment will be required.

Camber, Castor and King Pin Inclination Gauges.

Front Wheel Turntable Gauges.

Front Wheel Alignment Gauges.

Front Spring Compressors.

Regardless of the make and type of equipment used, it is imperative to follow the instructions given under "Preparation of Car"

CAMBER ANGLE

Camber angle is the angle of inclination of the front wheel from the vertical when viewed from the front. Outward inclination at the top of the wheel is termed "positive" while inward inclination is termed "negative".

The camber angle is adjusted by positioning shims between the crossmember turret and the fulcrum pin of the upper wishbone link.

It must be realised that any change of camber angle means an automatic change in king pin inclination angle.

The correct camber angle is given in the "General Data Section".

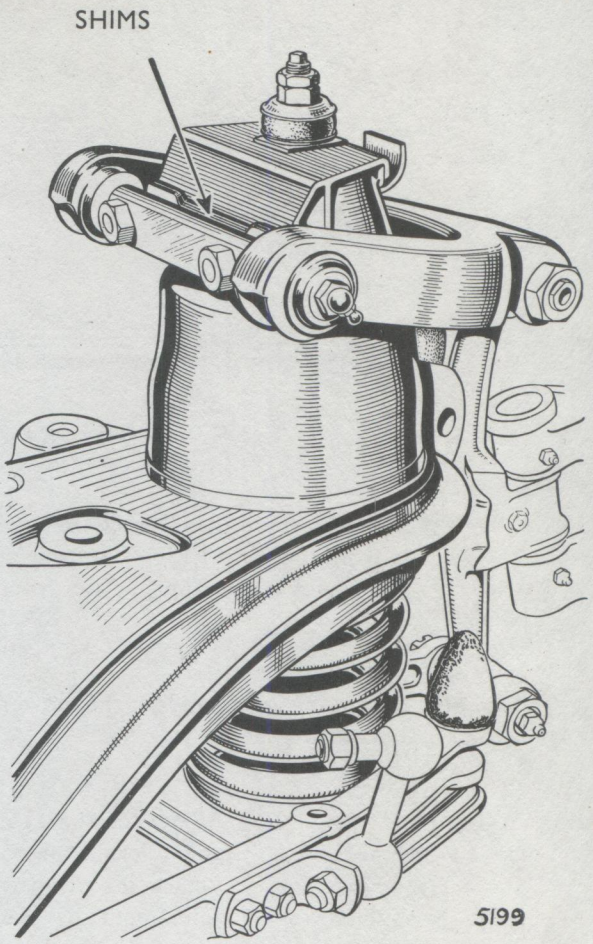

Fig. 3. *Showing the camber angle adjustment shims in position between the crossmember turret and upper fulcrum pin*

To check and adjust (Fig. 3)

1. Load the car on to the front and rear gap gauges as described under "PREPARATION OF CAR"—THIS IS IMPORTANT.
2. Check the camber angle with a suitable gauge taking care to follow the instructions supplied with the gauge, avoiding any front wheel "run-out" and the bulge in the tyre above its point of contact with the ground. Note the gauge reading.

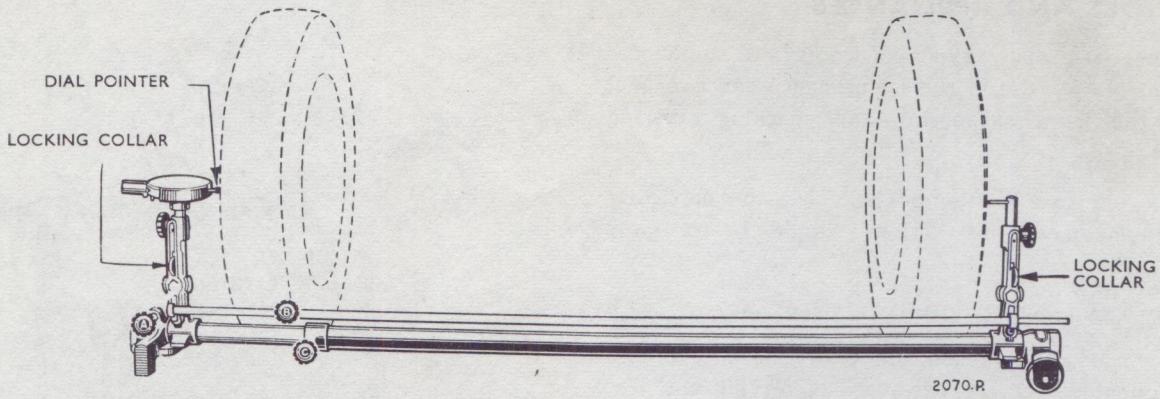

Fig. 4. *Churchill tracking gauge in position at the front of the wheels*

3. When the camber angle is incorrect, remove the weights from the car; jack up the front of the car and remove the appropriate front wheel.

4. Support the suspension under the lower wishbone link with a second jack.

5. Slacken, BUT DO NOT REMOVE, the two bolts which secure the upper fulcrum pin to the crossmember turret, where provision is made for camber angle adjustment by the means of shims.

6. To INCREASE the camber angle, remove and discard the required thickness of shims from between the crossmember turret and the upper fulcrum pin.
   To DECREASE the camber angle, insert the required thickness of shims between the crossmember turret and the upper fulcrum pin.

7. Tighten the two bolts evenly, making sure that these are not in any way threadbound, thus giving a false impression of tightness.

8. Refit front wheel and remove jacks.

9. Check the wheel camber on the opposite side and adjust, if necessary, observing the same procedure.

10. Check king pin inclination angles and when the determined king pin inclination angle is incorrect the suspension unit must be stripped down and each detail examined for distortion.

CAMBER ADJUSTMENT SHIMS (Fig. 3)

Camber adjustment shims are positioned between the crossmember turrets and the upper link fulcrum pins. They are available in one thickness and have slotted ends to facilitate fitting and removal. $\frac{1}{16}$ in. (1·6 mm.) thick equals 20′ variation in camber angle.

FRONT WHEEL ALIGNMENT (Toe-in)

Front wheel alignment (toe-in) is the setting of the front wheels so the distance between the front portion of the wheels, level with the hub, is less than that at the rear.

The correct amount of "toe-in" is given in the "General Data Section".

To check and adjust (Fig. 4)

1. Load the car on to the front and rear gap gauges as described under "PREPARATION OF CAR"—THIS IS IMPORTANT.

2. Set the front wheels in the straight ahead position.

3. Check the camber angle of both front wheels and correct as necessary, see under "FRONT WHEEL CAMBER ANGLE".

4. Check the front wheel alignment with a suitable gauge, taking care to follow the instructions supplied with the gauge and to avoid any front wheel "run-out". Note the gauge reading.

5. When the alignment is found to be incorrect slacken the ball joint locknuts of both outer track rods.

6. Rotate BOTH track rods EQUAL amounts in the necessary direction to lengthen or shorten the rods to obtain the correct front wheel alignment.

7. Finally lock the track rods in position, taking care not to alter their length. It is important that the track rod sockets are centrally disposed on their ball pins after tightening the locknuts.

When the front wheels are mis-aligned to any large amount, a damaged track rod(s) or worn ball joint(s) may be the cause. All track rods and ball joints should be examined and the affected parts renewed.

Should ever severe tyre wear be evident while the front wheel alignment shows no inaccuracies, the Ackerman angles must be checked, see "ACKERMAN ANGLES".

CASTOR ANGLE

Castor angle is the angle of inclination of the king pin centre line from the vertical when viewed from the side. Rearward inclination at the top of the centre line is termed "positive" while forward inclination is termed "negative".

The castor angle is set during production and cannot be adjusted, it remains correct providing the front suspension components are not damaged.

A calculated castor angle is given in the "General Data Section" and reference must be made to "STEERING ALIGNMENT SETTINGS AND OPERATIONS" described earlier in this Section.

To check the castor angle

1. Load the car on to the front and rear gap gauges as described under "PREPARATION OF CAR"—THIS IS IMPORTANT.

2. Position packing blocks of the same thickness as the turntable gauges under both rear wheels to keep the car level whilst the turntable gauges are in use under the front wheels.

3. Jack up the front of the car and position turntable gauges under the front wheels.

4. Lower the car on to the gauges and after ensuring the front wheels are in the straight ahead position, set the gauges to zero.

5. Check the castor angle with a suitable gauge taking care to follow the instructions supplied with the gauge avoiding any front wheel "run-out" and the bulge in the tyre above its point of contact with the ground. Note the gauge reading.

6. Carry out the same procedure on the opposite side and make a note of the castor angles.

7. When the castor angle is incorrect, the front suspension unit must be stripped down and each detail examined for distortion.

KING PIN INCLINATION ANGLE

King pin inclination angle is the angle at which the king pin centre line is inclined inward from the vertical when viewed from the front.

The angle is set during production and cannot be adjusted, it remains correct providing the stub axle carrier is not damaged and the camber angle is correct. The relationship between the king pin inclination and the camber angle is such that the camber angle cannot be corrected without altering the king pin inclination angle.

The correct king pin inclination angle is given in the "General Data Section".

To check

1. Check and correct the camber angle, see under "CAMBER ANGLE—To check and adjust".
2. Check the king pin inclination angle with a suitable gauge taking care to follow the instructions supplied with the gauge avoiding any front wheel "run-out" and the bulge in the tyre above its point of contact with the ground. Note the gauge reading.
3. When the king pin inclination angle is incorrect, the front suspension unit must be stripped down and each detail examined for distortion.

ACKERMAN ANGLES (Toe-out on turns)

Ackerman angles are essential to enable the front wheels of the car to follow their respective arcs and to obtain a rolling action rather than a sliding action when the car is cornering.

The correct Ackerman angles are achieved when designing the car by arranging the steering arms to point inwards at a predetermined angle.

When a car has been in a collision the steering arms may become bent and should the front wheel alignment be set in this condition the Ackerman angles will also be incorrect. The incorrect Ackerman angles will cause heavy scrubbing of the tyres when the car is cornering because the front wheels cannot travel in their respective arcs.
In Canada and the United States of America "Ackerman angles" are known as "Steering Geometry".

To check

1. Load the car on to the front and rear gap gauges as described under "PREPARATION OF THE CAR"—THIS IS IMPORTANT.
2. Check the camber angle and adjust, see under "CAMBER ANGLE—To check and adjust".
3. Check the front wheel alignment (toe-in), see under "FRONT WHEEL ALIGNMENT—To check and adjust".
4. Position packing blocks of the same thickness as the turntable gauges under both rear wheels to keep the car level while the turntable gauges are in use under the front wheels.
5. Jack up the front of the car and position the turntable gauges under both front wheels.
6. Lower the car on to the turntable gauges and after ensuring that the front wheels are in the straight ahead attitude; set the turntable gauges to zero.
7. Turn the steering to the right until the LEFT-HAND turntable gauge reads 20 degrees. The right-hand gauge should now read the figure given in the "GENERAL DATA SECTION".
8. Turn the steering to the left until the RIGHT-HAND turntable gauge reads 20 degrees. The left-hand gauge should now read the figure given in the "GENERAL DATA SECTION".

When after checking, the Ackerman angles are found to be incorrect, BOTH outer track rods should be adjusted, see under "SETTING, OUTER TRACK RODS". When this does not correct the

error, it must be assumed that a damaged track rod(s) or a worn ball joint(s) is the cause. All track rods and ball joints should be examined and the affected parts renewed.

For the Ackerman angle to be correct in service, the following conditions must exist.

(i) Steering arms are undamaged.

(ii) Centre track rod and the two outer track rods are undamaged.

(iii) Outer track rod lengths adjusted so that the front wheels are properly tracked in the straight ahead position WHEN the steering box is in the centre of its movement range. If required, the outer track rod lengths may be unequal.

(iv) Steering and idler unit swing arms (drop arms) are undamaged.

SETTING OUTER TRACK RODS

To obtain the correct "ACKERMAN ANGLES (toe-out in turns)" and to ensure the correct setting of the steering linkage when new parts have been fitted, the following procedure must be followed:—

1. Load the car on to the front and rear gap gauges as described under "PREPARATION OF CAR"—THIS IS IMPORTANT.

2. Slacken the locknuts on both outer track rods and disconnect the inner ball joints from the centre track rod.

3. Centralise the steering unit by turning the steering wheel to the mid-position between the right-hand and left-hand locks. To determine this, count the number of steering wheel turns from lock to lock, then turn the steering wheel back half this amount from full lock. THE STEERING UNIT MUST BE RETAINED IN THIS POSITION THROUGHOUT THE OPERATION.

4. Set both front wheels in the straight ahead position by setting them parallel with the rear wheels and measure the distance from the centre of the tyre treads to the grease nipple tappings in the lower fulcrum pins. MAKE SURE THESE DISTANCES ARE EQUAL.

5. Adjust the length of both outer track rods until their ball pins enter freely into their respective positions in the centre track rod. IT IS IMPORTANT THAT THIS IS CARRIED OUT WITHOUT DISTURBING THE SETTING OF THE FRONT WHEELS AND THE STEERING UNIT.

6. Fit both outer track rods to the centre track rod, lock the two castellated nuts with new split pins.

7. Check and adjust the camber angle and front wheel alignment (toe-in), see under "CAMBER ANGLE and FRONT WHEEL ALIGNMENT—To check and adjust".

8. Finally lock the track rods in position, taking care not to alter their length. It is important that the track rod sockets are centrally disposed on their ball pins after tightening the locknuts.

On checking, the Ackerman angle setting should be correct provided the foregoing procedure has been carried out and all steering components are undamaged.

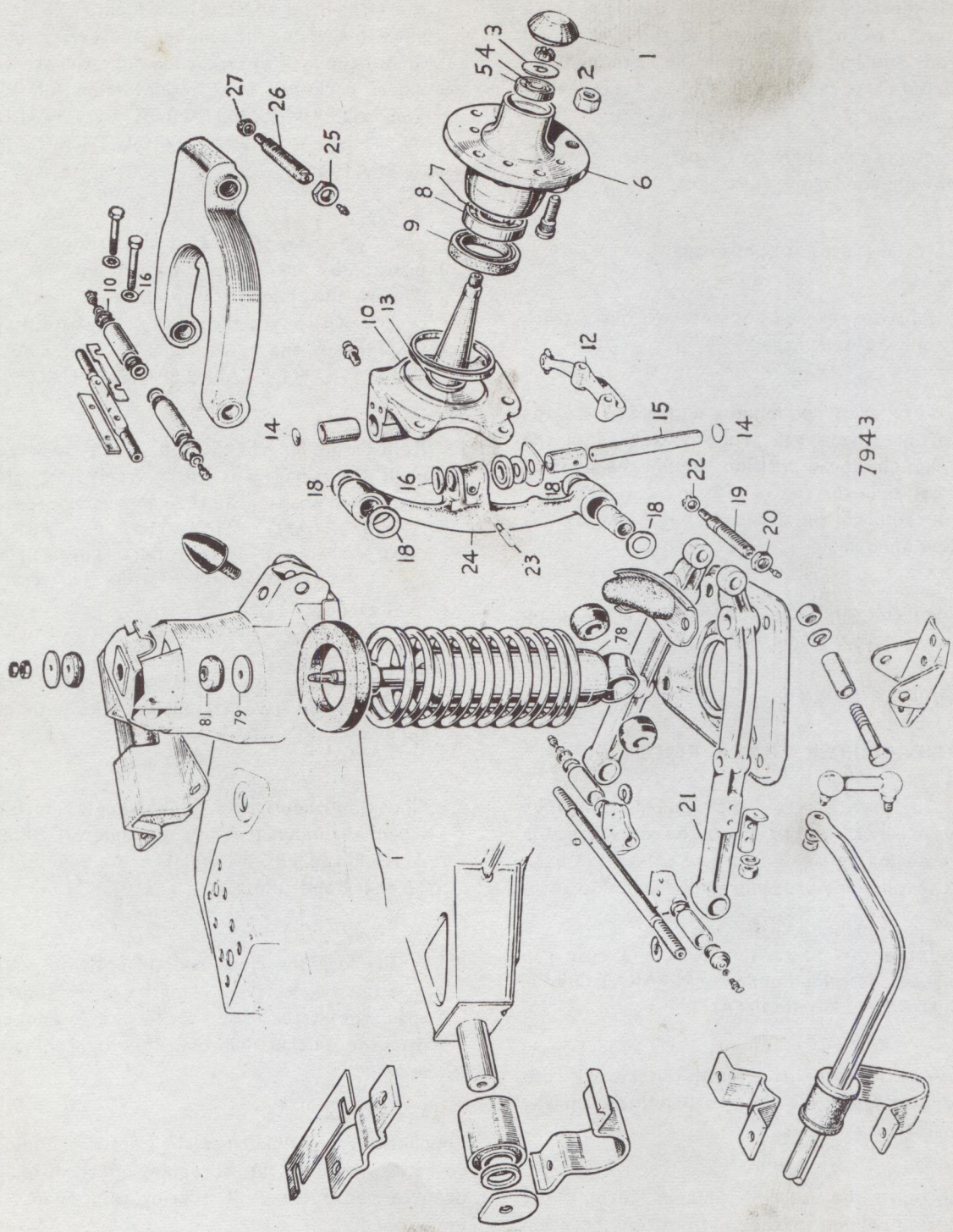

Fig. 5. *Exploded view of front suspension, Series IV and Imperial Cars onwards*

TO REMOVE AND REFIT SUSPENSION ASSEMBLY

Removing, complete assembly

1. Jack up the front of the car and position stands under the front sidemembers, remove both front wheels.
2. Remove the shock absorbers, see under "SHOCK ABSORBERS—To remove and refit" and fit the spring compressor Churchill tool No. RG.50D.
3. Drain the cooling system and detach the flexible hoses—See Section "A".
4. Support the crossmember from below with a trolley jack and blocks of wood; position stands under the front hubs. Support the engine unit from above with a suitable hoist.
5. Detach the front engine mountings and tie rod from the crossmember.
6. Clean the chassis ends of both flexible hydraulic brake pipes and disconnect the pipes at the chassis connections. Close the ends of the brake pipes with sealing unions to exclude dirt from the hydraulic system.
7. Disconnect both outer track rods from the steering arms by discarding the split pins and removing the castellated nuts. IT IS IMPERATIVE THAT THE STEERING ARMS DO NOT BECOME BENT OR DISTORTED DURING THIS OPERATION OR DURING THE REMOVAL OF THE SUSPENSION.
8. To prevent the upper inner fulcrum pins fouling the car's underframe when the suspension is lowered from beneath the car, withdraw the upper fulcrum pin bolts and identify the camber shims to their respective positions. Lift the fulcrum pin into the lips on the crossmember turrets, thus preventing the suspension units hanging on the lower wishbone links.
9. Remove the stabiliser bar from the top of the two vertical links by removing the nuts and using a suitable ball pin extractor.
10. Remove the two stands supporting the front hubs.
11. Detach the steady arm and crossmember from the underframe and two sidemembers respectively by withdrawing two bolts and washers, clamp, rubber pads and retainer plate and four bolts respectively. In the instance of Series V and Imperial Cars onwards, identify the shims beneath the underframe; the distance piece and rubber bush can be removed from the steady arm spigot by withdrawing a bolt and "D" shaped washer.
12. Lower the front suspension downwards and withdraw from beneath the car on the trolley jack.

Refitting, complete assembly

Refitting is the reverse of the removal sequence but particular attention must be given to the following:—

(i) Ensure that the bosses of the four tappings in the mountings locate the recesses around the bolt holes in the crossmember or in the instance of Series V and Imperial cars onwards, a dowel in each mounting locates holes in the crossmember. When difficulty is experienced, see under "Sidemember mountings—To remove and refit". Tighten the four bolts to the torque given in the "GENERAL DATA SECTION". Refit the mountings to the steady arm, see under "Steady arm mountings—To remove and refit".

(ii) Refit the original shims between the crossmember turrets and the upper fulcrum pins; when new components or a complete suspension is being fitted the correct number of shims will be found on checking the camber angle.

(iii) When replacing the engine tie rod, its front nuts should be adjusted so that the rubber bushes are partly compressed and the rear nuts are tightened so the rod is not in tension or compression.

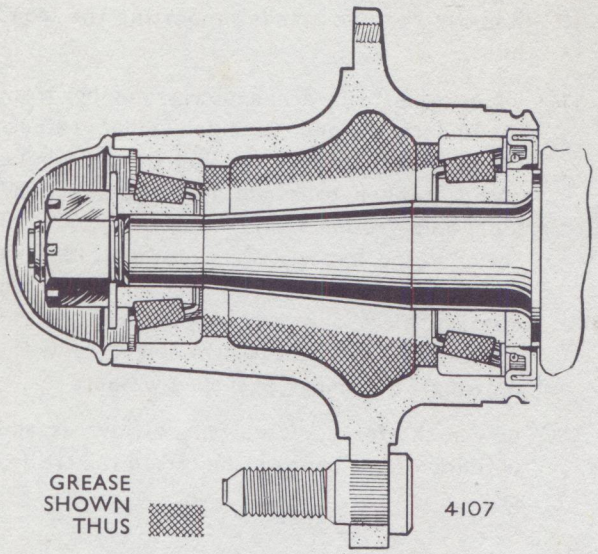

Fig. 6. *Front hub correctly packed with grease*

(iv) After reconnecting the hydraulic brake flexible hoses, it is essential to bleed the braking system. See SECTION "K".

(v) The camber angles and front wheel alignment (toe-in) must be checked and adjusted following the refitting of the suspension or when new parts have been fitted.

DISMANTLING AND ASSEMBLING, SUSPENSION

(Complete unit attached to car)

To facilitate the servicing of a single component, the dismantling and reassembling of each item is fully described under the appropriate heading. The operational sequences, the dismantling and assembling procedures apply equally when servicing both sides of the suspension.

FRONT HUB AND BEARINGS (Fig. 5)

To dismantle and reassemble

1. Jack up the front of the car and remove the appropriate front wheel.

2. *Series I cars:* Remove the brake drum by withdrawing a countersunk screw.

   Series II cars and onwards: Remove the disc brake caliper by withdrawing two bolts and suspend nearby without straining the flexible hose. See Section "K".

3. **Care must be taken to prevent any grease coming into contact with the brake linings or pads** whilst dismantling the hub.
   Remove the hub dust cap (1) from the hub (6).

4. Withdraw the split pin and remove the castellated nut (2) and plain washer from the stub axle (10).

5. Pull the hub (6) off the stub axle (10) at the same time holding a hand under the hub to catch the roller assembly (4) of the outer taper bearing; the large roller assembly (7) of the inner taper bearing can be removed by hand after extracting the oil seal (9). When new bearings are to be fitted the outer races (5 and 8) can be removed from the hub (6) by tapping them out with a suitable drift. The distance piece (13) normally remains on the stub axle (10).

To reassemble (Figs. 5 and 6)

1. Press the outer races (5 and 8) into the hub (6) in both cases the larger internal diameter must be outwards from the respective ends of the hub (6).

2. Pack the hub (6) and roller assemblies (4 and 7) with grease of the correct grade, see Section "P". The amount required is one and a half capfuls distributed evenly within the hub shell (6) as shown in Fig. 6.

   THE HUB DUST CAP WHEN FITTED MUST NOT CONTAIN GREASE.

3. Position the large inner roller assembly (7) inside the hub (6) followed by the oil seal (9) so the fold of the lip is toward the bearing (7) as shown in Fig. 6.
4. When necessary press the distance piece (13) on to the stub axle (10).
5. Position the hub (6) on the stub axle (10), and position the small inner roller assembly (4) inside the hub (6).
6. Fit the large plain washer (3) the castellated nut (2) and adjust the bearings, see under "FRONT HUB ADJUSTMENT".
7. Lock the castellated nut (2) with a new split pin and fit the hub dust cap. DO NOT PACK THE HUB DUST CAP WITH GREASE.
8. Refit the brake caliper or brake drum—See Section "K".
9. Refit the front wheel and remove the jacks.

Front hub adjustment

It is essential that the endfloat of the front hub bearing is correct; to obtain the proper condition the following procedure must be observed—THIS IS IMPORTANT.

1. Jack up the front of the car until the front wheel is clear of the ground.
2. Remove the nave plate and the hub dust cap.
3. Extract and discard the split pin from the castellated nut and apply a suitable torque wrench. Spinning the front wheel simultaneously, tighten the castellated nut until a torque reading of 15 to 20 lbs. ft. (2·07 to 2·76 kg.m.) is obtained.
4. Slacken the castellated nut one to one-and-a-half flats and spin the front wheel.
5. Check the endfloat with a dial test indicator, which should read between the figures given in the "General Data Section".
6. When the endfloat is not within these figures, the castellated nut must be further adjusted and the endfloat again checked with the dial test indicator.
7. When the correct adjustment has been obtained with the slots in the castellated nut in correct relation to the split pin hole in the stub axle, lock the nut with a new split pin of the correct size.

   DO NOT FILL THE HUB DUST CAP WITH GREASE.

   Refit the hub dust cap, nave plate and front wheel.

SHOCK ABSORBERS

To remove and refit

1. Jack up the front of the car and remove the appropriate front wheel.
2. Position a suitable jack beneath the stub axle carrier (24) and raise the lower wishbone link to just below the horizontal position.
3. Remove the two nuts, metal and rubber washers from the upper shock absorber stem, protruding through the crossmember turret.
4. *Series I and II cars:* Slacken the two nuts on the lower shock absorber stem protruding through the lower wishbone link.
5. Remove the two nuts securing the shock absorber upper and lower mounting plates to the lower wishbone link.
6. Lift the upper shock absorber plate so its two studs are clear of their slots in the wishbone link; rotate the mounting plate 90° and withdraw the shock absorber downward through the aperture in the lower wishbone link.
7. Remove the upper and lower mounting plates from the lower shock absorber stem, together with the metal and rubber washers by removing the two nuts.

8. *Series III cars and onwards:* Withdraw the shock absorber downward through the lower wishbone link by removing two nuts and washers from the underside of the lower wishbone link.

9. Remove the mounting bracket and rubber bushes from the shock absorber eye by withdrawing a bolt, nut, washer and ejecting the tubular distance piece.

10 *All cars:* Withdraw the metal and rubber washers from the upper shock absorber stem.

11. Refitting is the reverse of the removal sequence but particular attention must be given to the following:—

(i) That a rubber washer, with a metal washer each side, is fitted to the top stem of the shock absorber and when the shock absorber is in position, a similar washer assembly is fitted to the stem as it protrudes through the crossmember turret.

(ii) *Series I and II cars:* The holes in the upper and lower mounting plates are offset $\frac{1}{8}$ in. (3 mm.) on the front wheel side to ensure the shock absorber clears the front spring on rebound. The mounting plates, convex sides together, are fitted to the lower shock absorber stem so the threaded shanks point downward; metal and rubber washer assemblies, similar to those fitted to the upper stem, are fitted both sides of the plates but the two nuts are not fully tightened until the shock absorber is fitted in position by fitting nuts to the threaded shanks of the mounting plate.

(iii) *Series III cars and onwards:* Ensure the rubber bushes are fitted to the shock absorber eye, long tapered end first, and insert the tubular distance piece; fit the mounting bracket and tighten the bolt, nut and washer until they bottom.

(iv) The rubber washers on the upper and lower shock absorbers stem are correctly compressed when the first of the two nuts is fully tightened; the second nut is a locknut.

STABILISER BAR

To remove and refit

1. Detach the upper ends of both vertical links from the stabiliser bar by removing the nuts and using a ball pin extractor.

2. Remove the two vertical links from the lower wishbone link brackets by removing two nuts and washers. When necessary remove the two brackets from the lower wishbone links by withdrawing four bolts, nuts and washers.

3. Remove the stabiliser bar from the underframe by withdrawing four bolts and washers, two brackets and clips.

4. Remove the two support rubbers from the stabiliser bar by opening each at the split.

5. Refitting is the reverse of the removal sequence but particular attention must be given to the following:—

(i) Fit the link brackets to the lower wishbone so the angled ends are nearer the front wheels.

(ii) Ensure the support and vertical link rubbers are in good condition.

(iii) That all securing details are left slack and then tightened with the weight of the car on the road wheels.

STUB AXLE CARRIER (Fig. 5)

To remove and refit

1. Remove the shock absorber—see under "SHOCK ABSORBER—To remove and refit", compress the front spring with the Churchill tool No. RG.50D.

2. Remove the stub axle assembly (10), see under "KING PINS—To remove".

3. Remove the grease nipples and split pins from the front and rear ends of both eye bolts (19 and 26).

4. Remove the front nuts (20 and 25) from both eye bolts (19 and 26) followed by the castellated nuts (22 and 27) and unscrew the eyebolts (19 and 26) from the upper and lower links by the two flats on their front ends, withdraw the stub axle carrier (24) and collect the four sealing rings (18).

5. The refitting is the reverse of the removal but particular attention must be given to the following:—

   (i) The four sealing rings (18) are positioned on the upper and lower bosses of the stub axle carrier (24) and then slid outwards after the eye bolts (19 and 26) have been fitted (Fig. 7).

   The stub axle carrier for Series V and Imperial cars onwards, equipped with power-assisted steering, is identified by a slot machined in the king pin boss.

   (ii) That the eye bolts (19 and 26) are screwed into the upper and lower wishbone links, so the stub axle carrier (24) is midway between the link arms and until the shoulder of each eye bolt abuts to the rear arm of its respective link but without spreading them apart.

   (iii) That the locknuts (20 and 25) are fitted first and tightened very securely followed by the castellated nuts (22 and 27), tightened to 30 lb. ft. (4·15 kg.m.); when the split pin holes do not align, tighten to the next slot.

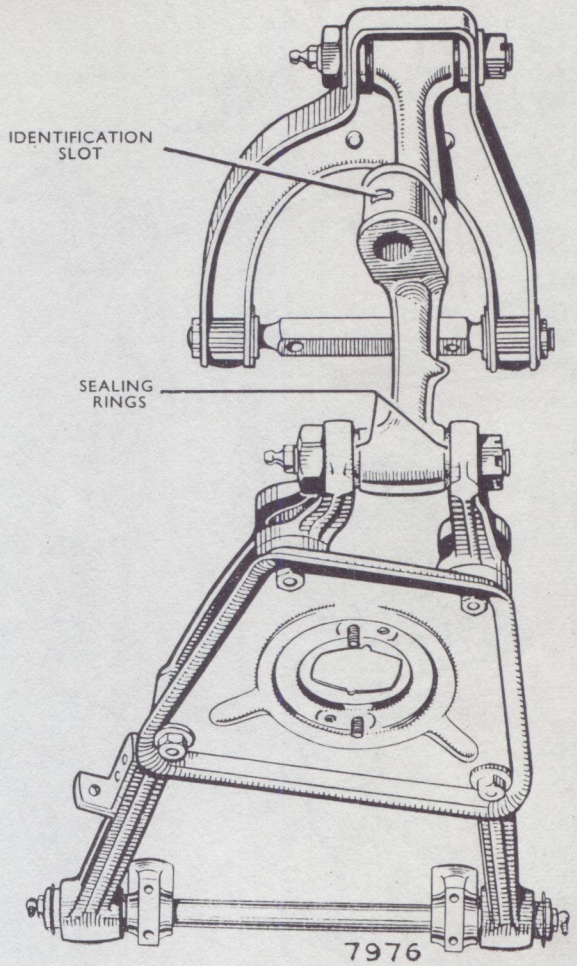

Fig. 7

The stub axle carrier showing the position of the sealing rings, eyebolt locknuts and the identification slot machined in the king pin boss for Series V and Imperial cars onwards equipped with power-assisted steering

FRONT SPRING (Fig. 8)

To remove and refit

1. Remove the shock absorber—see under "SHOCK ABSORBER—To remove and refit", compress the front spring with the Churchill tool No. RG.50D.

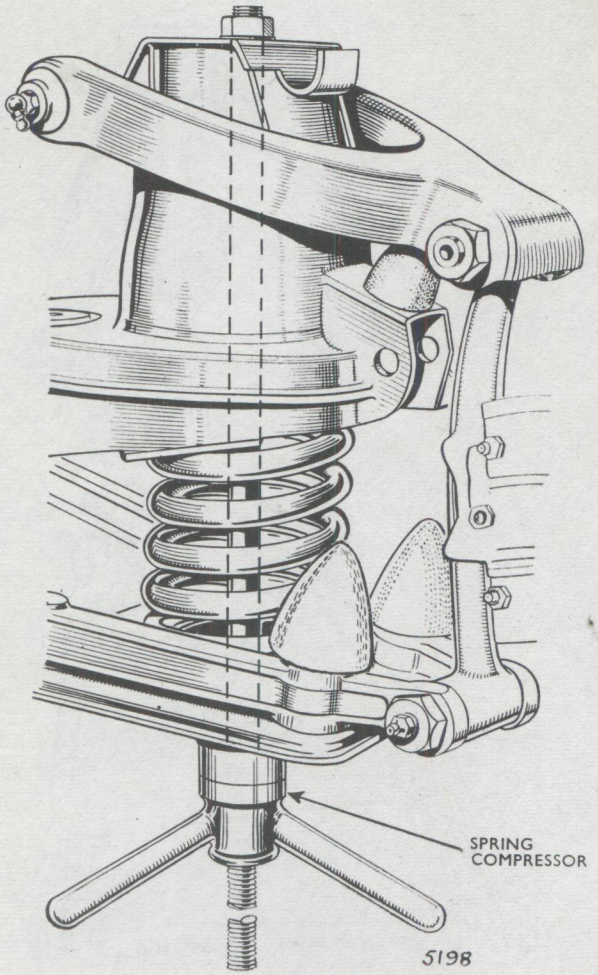

Fig. 8. *The Churchill tool No. RG.50D replacing the shock absorber to compress the front spring.*

2. Support the suspension unit with a block of wood between the upper wishbone link and the crossmember turret, thus keeping the unit in this upper position while the front spring is removed.

3. Remove the four nuts and washers securing the spring pan to the underside of the bottom link.

   On early cars, identify any spaceer washers evident between the two inner corners of the spring pan and the bottom link. Release the spring compressor slowly.

4. Remove the spring compressor followed by the spring pan, front spring and the rubber insulator pad.

5. Refitting is the reverse of the removal sequence but particular attention must be given to the following:—

   (i) That the rubber insulator pad is fitted to the top of the front spring.

   (ii) That the bump rubber or rubbers are fitted to the positions nearer the stub axle carrier.

   (iii) The spacer washers, between the two inner corners of the spring pan and the bottom link, are only required when the spring pan is without the two $\frac{3}{8}$ in. (9·5 mm.) U.N.F. studs adjacent to the shock absorber aperture, see Fig. 7.

UPPER WISHBONE LINK (Fig. 5)

To remove and refit

1. Remove the shock absorber—see under "SHOCK ABSORBER—To remove and refit", compress the front spring with the Churchill tool No. RG.50D.

2. Withdraw the grease nipple and split pin from the front and rear ends of the upper eye bolt (26).

3. Remove the front nut (25) from the eye bolt (26) followed by the castellated nut (27) and unscrew the eye bolt (26) from the link by the two flats on its front end; collect the two rubber seals (18) by raising the upper link.

4. Tie the top end of the stub axle carrier (24) to the crossmember turret.

5. Wire the camber shims, positioned between the crossmember turret and the upper fulcrum pin, to the fulcrum pin.

6. Remove the upper wishbone link and shims from the crossmember turret by withdrawing two bolts, shakeproof washers and the weld nut attachment plate.

7. Refitting is the reverse of the removal sequence but particular attention must be given to ensure that both the camber and front wheel alignment are checked.

LOWER WISHBONE LINK (Fig. 5)

To remove and refit

1. Remove the front spring, see under "FRONT ROAD SPRING—To remove and refit".

2. Detach the stabiliser bar, see under "STABILISER BAR—To remove and refit".

3. Withdraw the grease nipple and split pin from the front and rear ends of the upper eye bolt (26).

4. Remove the front nut (25) from the eye bolt (26) followed by the castellated nut (27) and unscrew the eye bolt (26) from the link by the two flats on its front end; collect the two rubber seals (18) by raising the upper link.

5. Withdraw and identify the spacer washers in the slotted side of the two fulcrum pin brackets by removing the two bolts from the slotted side of the bracket.

6. Detach the lower link arms and fulcrum pin from the underside of the crossmember by removing the remaining two bolts, locking plate, or spring washers.

7. The refitting is the reverse of the removal but particular attention must be given to the following:—

   (i) That the fulcrum pin is located to one of the fulcrum pin brackets by a dowel fed through the crossmember fitting face of the bracket.

   (ii) THAT WHEN REFITTING THE FULCRUM PIN BRACKETS AND SPACER WASHERS WHICH LOCATE THEREIN, IT IS VITALLY IMPORTANT THEY SHOULD BE REFITTED IN ACCORDANCE WITH THE INSTRUCTIONS GIVEN UNDER "LOWER FULCRUM PIN BRACKETS—Attachment to front crossmember".

   (iii) That the outer end of the bottom link arms (21) are fitted to the stub axle carrier (24)—see under "STUB AXLE CARRIER—To remove and refit".

   (iv) That the rubber insulator is refitted to the top of the road spring.

   (v) THAT THE SPACER WASHERS AND FULCRUM PIN BRACKET BOLTS IN THE SECOND FRONT SUSPENSION UNIT ARE ATTENDED TO, WHEN IT IS OBSERVED THAT THE FOUR BRACKET BOLTS ARE SECURED BY LOCKPLATES.

LOWER FULCRUM PIN BRACKETS —

Attachment to front crossmember (Fig. 9)

A revised spacer washer arrangement was introduced on late Series II cars and this method of attachment should be applied to all earlier cars whenever the front suspension is being reassembled. The work consists of removing the existing bolts and tabwashers which secure the inner fulcrum pin brackets to the suspension crossmember and replacing them with new parts in accordance with the procedure set out below.

During the course of the operation special attention must be given to the checking of the spacer washers which locate in the slots of the fulcrum brackets.

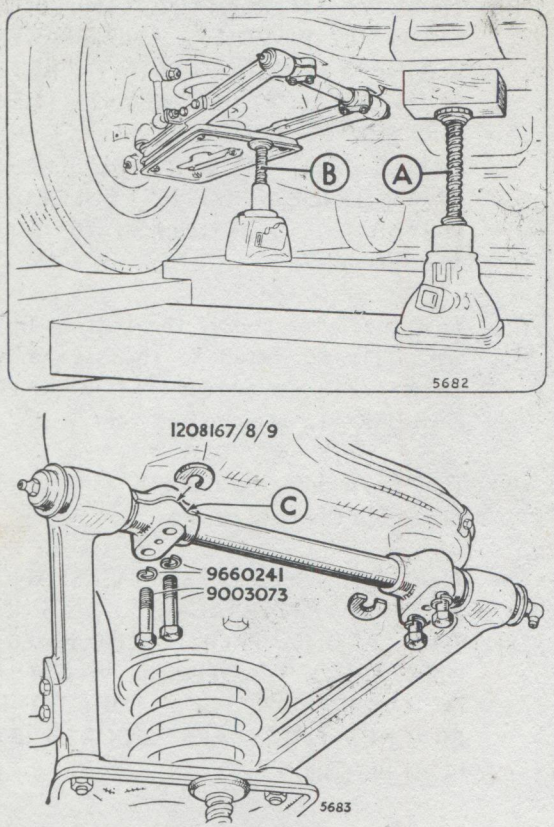

Fig. 9. *Fitting spacer washers to the lower fulcrum pin brackets*
"A" A jack taking the weight of the car
"B" A jack holding the lower wishbone link against the underside of the crossmember
"C" Showing the spacer washer and slot in one side of the fulcrum pin bracket

These must be of suitable thickness to obtain the correct clearance, thus ensuring that the fulcrum pin is securely nipped and the bracket solid when the bolts are tightened. Spacer washers are available in three thicknesses.
It is therefore extremely important to adhere strictly to the following detailed procedure.

1. Position the car on a ramp and apply the hand brake.

2. The weight must be taken off the front end of the car by using a jack situated under the front crossmember as illustrated in Fig. 9 at A, but ensuring the tyres remain in contact with the ramp.

3. Place another jack under the coil spring abutment plate, carefully positioned and offset to rear as shown in Fig. 9 at B. Jack up the suspension so the linkage will bear against the crossmember when the inner fulcrum pin bracket bolts are loosened.

4. Remove and discard the bolt in the non-slotted side of the front bracket, bending the lockplate clear. Fit new bolt and spring washer but DO NOT TIGHTEN UNTIL ACTION AS DESCRIBED IN THE FOLLOWING PARAGRAPH HAS BEEN TAKEN.
Remove and discard the lockplate in the slotted side of the front bracket. Select a new spacer washer from the various thicknesses listed so that there is a clearance of 0·005 in. to 0·010 in. (0·13 to 0·25 mm.) when it is in position in the slot, see Fig. 9 at C. IF THIS CLEARANCE CANNOT BE ACHIEVED, THE SPACER WASHER MUST BE FACED DOWN TO SUIT.
Fit new bolt and spring washer and tighten both bolts to the torque loading given in the "GENERAL DATA SECTION"..

5. Repeat the same operation at rear bracket. Then carry out the same procedure on the other side of the crossmember suitably positioning the second jack.

6. When this work has been carried out, recheck the torque loading of all eight bolts.

7. It is important to note that the fulcrum pin is located by a dowel in one support bracket. If for any reason it is necessary to dismantle the front suspension, it is essential to ensure that the dowels are correctly fitted.

Parts required:

Item	*Part No.*	*Quantity*
Bolts	9003073	8
Spacer washers (size as required)		
·113/·115 in. (2·87/2·92 mm.)	1208167	
·117/·119 in. (2·97/3·02 mm.)	1208168	4
·121/·123 in. (3·07/3·12 mm.)	1208169	
Spring washers	9660241	8

SERVICE OPERATIONS

STUB AXLE CARRIER THREADED BUSHES (Fig. 10)

To remove and refit

Before fitting new threaded bushes or eye bolts it is most important that these parts are selected so they will screw together freely by hand.

Clearance is provided between the threads of the bushes and eye bolts to allow for lubrication and this clearance must not be mistaken for wear.
The threaded bushes have external knurling at one end and this end is always pressed in last and therefore pressed out first.

1. Press the original bushes out of the stub axle carrier bosses from the REAR, i.e., so the knurled end is ejected first.

2. Press the replacement bushes into the stub axle carrier bosses from the REAR, knurled end LAST, to enable the knurling to engage a plain portion of the boss until they protrude 0·010 in. (2·54 mm.) from the front face.

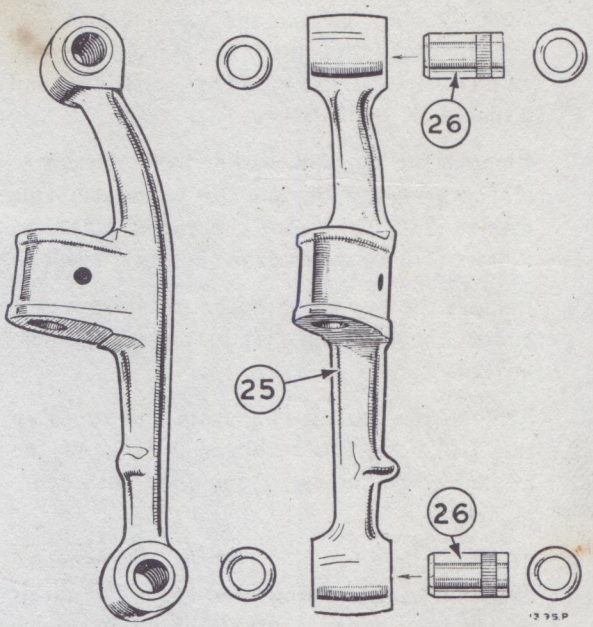

Fig. 10. *Fitting the threaded bushes to the stub axle carrier, the new bush is fitted from the REAR of the carrier, knurled end LAST*

KING PINS

To remove (Fig. 5)

1. Remove the front hub assembly from the stub axle, see "FRONT HUBS—To dismantle and reassemble".

2. To facilitate refitting, identify the number of shim washers under the head of the rear steering arm bolt as this bolt acts as a steering lock stop.

   Series I cars: Detach the brake back plate, oil catcher and steering arm (12) from the stub axle (10) by removing four bolts, nuts and washers.

   Series II and III cars: Detach the steering arm (12) and brake disc splash guard from the stub axle (10) by withdrawing two bolts, nuts and washers.

Series IV cars: Detach the steering arm (12) and the brake disc splash guard from the stub axle (10) by withdrawing two bolts, nuts and a small bolt with washers.

3. Remove the nut and washer from the cotter (23) securing the king pin (15) to the stub axle carrier (24). Drive out the cotter (23) with a brass drift to avoid damaging its threads.

4. Remove the two welch washers (14) from each end of the king pin (15) by collapsing them inward.

5. Remove the sealing ring from the top stub axle (10) boss, this sealing ring will only be evident when the car is equipped with drum brakes.

6. Remove the king pin (15) in a downward direction using a withdrawal tool. The pin is drilled and tapped $\frac{3}{8}$ in. U.N.F. at its lower end to facilitate its withdrawal.

7. Slide the thrust washer(s) from between the stub axle (10) and the stub axle carrier (22) bosses.

8. The stub axle can be raised slightly on its carrier in order to break the adhesion and preserve the rubber sealing ring (16) before drawing the stub axle (10) outwards and away from the stub carrier (24)

9. Should the sealing ring (16) become damaged, it must be renewed.

10. The fitting of new king pin bushes is detailed separately, see under "KING PIN BUSHES—To renew".

To refit

1. Smear the rubber sealing ring (16) with grease and position in the recess around the bottom end of the top stub axle bush.

2. Feed the king pin (15) into the lower stub axle boss, plain end first, so it protrudes above the top face and locate the thrust washer(s) on top with a smear of grease. Particular attention must be given to the pack of three thrust washers so the lesser curved edge of the lower washer will align with the side face of the stub axle carrier (24), see "KING PIN THRUST WASHER—Fitting".

3. Offer up the stub axle (10) so assembled to the axle carrier (24) taking care not to damage or displace the sealing ring (16) and feed the king pin (15) into the axle carrier (24) and the second stub axle boss so the cotter groove aligns with the hole in the axle carrier (24).
FIT THE COTTER (23) FLAT FACE TOWARDS THE KING PIN AND THE THREADED END TOWARDS THE FRONT OF THE CAR, THEN DRIVE IT HOME.
The cotter (23) must not be fitted the other way round as there is no machined face for its nut to bed against.
Secure the cotter (23) with a shakeproof washer and nut.

4. Fill the recesses above and below the king pin (15) with Shell Retinax "A" Grease. When the car is equipped with drum brakes, fit the sealing ring to the top stub axle (10) boss. Seal both apertures with welch washers (14).

5. As the rear steering arm bolt acts as a steering lock stop, refit the same number of shim washers under its head as were removed.

6. *Series I cars:* Fit the brake backing plate and oil catcher to the stub axle (10) with two short bolts, nuts and washers at the top; followed by the steering arm (12) with two long bolts, nuts and washers at the bottom.
Series II and III cars: Attach the steering arm (12) and brake disc splash guard to the stub axle (10) with two bolts, nuts and washers; the splash guard under the front steering arm bolt and aligning the remaining two splash guard mounting brackets with the holes for the brake caliper bolts.

Series IV cars: Attach the steering arm (12) to the stub axle (10) with two bolts, nuts and washers. The brake disc splash guard is fitted with the brake caliper bolts and a small bolt and washer at the rear.

Refit the front hub assembly to the stub axle (10) and adjust the endfloat, see under "FRONT HUB—To dismantle and reassemble".

KING PIN THRUST WASHERS

When renewing king pin thrust washer (17) they must always be replaced with the same type, THEY ARE NOT INTERCHANGEABLE.

Series I and II cars: A single thrust washer (17) was fitted between the underside of the stub axle carrier (24) and top of the lower stub axle boss.

Later Series II cars and onwards: The three special king pin thrust washers (17) are as follows:—

(i) The lower, a flat steel bearing washer, is shaped to the outer face of the stub axle carrier, thus it will remain stationary at all times.

(ii) The centre, a flat non-metallic thrust washer is of the Poly Tetra Fluoro Ethylene (P.T.F.E.) type.

(iii) The top, a sealing washer with a recessed face, acts as a seal and encloses the centre washer.

To refit

1. *Series I and early II cars:* The single thrust washer may be fitted either way up. It cannot be replaced by the later type.

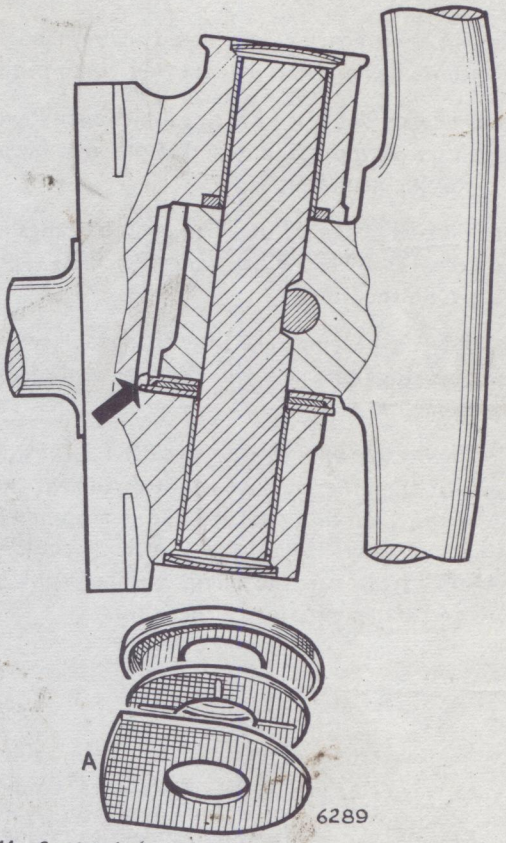

Fig. 11. *Sectional view of the king pin showing the position of the P.T.F.E. thrust washer assembly; it will be noted that the bottom washer is shaped to prevent it rotating*

2. *Later Series II cars and onward:* The lower washer is fitted polished side upwards and with the lesser curved edge against the stub axle carrier.

(i) The centre washer is fitted with the grooved side downward.

(ii) The top washer is fitted, recessed side downward to enclose the centre washer.

(iii) The three thrust washers are assembled with grease as a "pack" and located on the top end of the king pin as it protrudes through the top face of the lower stub axle boss; the complete assembly is then offered up to the stub axle carrier.

KING PIN BUSHES

Press-in bush bearings are fitted in both bosses of the stub axles and can be renewed when required.

Series I cars: The bush bearings in the stub axles of these cars were pressed in and afterwards broached to a specific diameter.

Series II cars and onwards: The bush bearings are of the Poly Tetra Fluoro Ethylene (P.T.F.E.) type and are pre-finished.

The P.T.F.E. bearings are interchangeable with the bush bearings and are the only ones available as replacements.

It is important when fitting the P.T.F.E. bush bearings that the inner surface is not disturbed and the use of the Churchill tool RG.226 is recommended. Dealers already having the Churchill tool RG.23 and RG.25 can use the anvil, bushing tool, guide bush and abutment ring of that tool.

To renew

1. Remove the stub axle (10) from the axle carrier (24), see "KING PINS—To remove".
2. Remove the grease nipples from the upper and lower bosses of the stub axle (10).
3. To avoid distorting the two stub axle bosses, abut their inner faces to the press bed using packing blocks as necessary when ejecting or refitting the bush bearings.
4. Eject the worn bush bearings from the stub axle bosses individually using the Churchill tool No. RG.226.
5. Offer up one new bush to the outer face of the stub axle boss so the hole aligns with the grease nipple tapping.
   Position on the press bed and press in the bush bearing until its inner edge is flush with the inner face of the stub axle boss using the Churchill tool No. RG.226.
   Repeat the previous operation with the second bush bearing.

   Refit the two grease nipples to the stub axle bosses.

   Refit the stub axle (10) to the stub axle carrier (24)—see under "KING PINS—To refit".

WELCH WASHERS

When refitting stub axles to the axle carriers it will be necessary to fit new welch washers (sealing discs) in the outer face of each stub axle boss. These should be expanded into position by striking the welch washer in its domed centre, taking care not to collapse it inwards. To avoid the possibility of the welch washer being blown out during high pressure lubrication, it is recommended that each boss is peened over its washer. A blow with a round nosed punch at four points round the boss will suffice.

SERVICING FRONT HUBS

The servicing of the front hubs has been described in detail under "FRONT HUB BEARINGS" and includes removing and refitting, the fitting of new bearings and endfloat adjustment.

FRONT SPRINGS

To check height

Full details of the loadings and lengths for checking the front springs on a test rig are given in the "General Data Section".

A quick check with the front springs in position can be made by placing a load evenly across the front compartment of the car; this load is given in the "General Data Section".

The distance between the crossmember top fitting face and the centre of the greaser in the forward outer end of the lower wishbone link eye bolt is now measured. The distance should be 6·10 in. $\pm$ 0·125 in. (15·5 cms. $\pm$ 3·2 mm.) and when the determined dimensions differ, the front springs should be removed for closer examination.

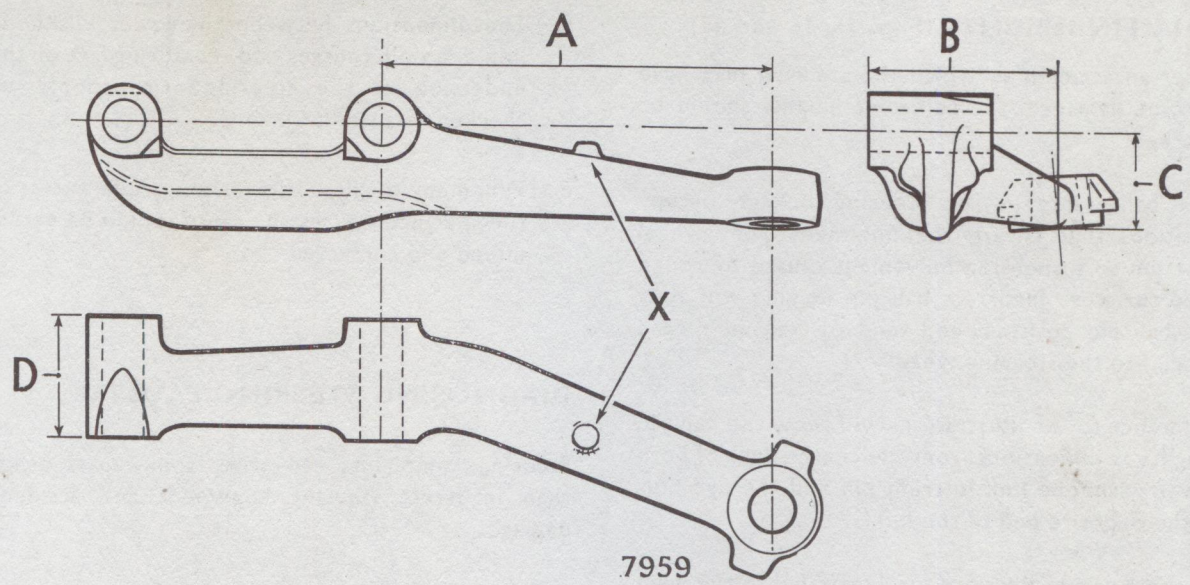

A	SERIES I ONWARDS	4·26 in. (108·2 mm.)
B	SERIES I ONLY	2·07 in. (52·6 mm.)
	SERIES III ONWARDS	2·01 in. (51·1 mm.)
C	SERIES I TO IV	1·04 in. (26·4 mm.)
	SERIES V AND IMPERIAL CARS ONWARDS	·80 in. (20·3 mm.)
D	SERIES I ONLY	1·33 in. (33·8 mm.)
	SERIES II ONWARDS	1·21 in. (30·7 mm.)
X	CAST "PIP" IDENTIFYING STEERING ARMS FOR SERIES V AND IMPERIAL CARS EQUIPPED WITH POWER-ASSISTED STEERING	

Fig. 12. *Steering arm dimensions; right-hand shown, left-hand symmetrically opposite*

ACCIDENTAL DAMAGE

In the event of accidental damage to the front of the car involving the front suspension all suspected parts should be removed, cleaned and checked for misalignment. All defective parts must be discarded and new parts fitted, straightening should not be attempted.

STEERING ARM DIMENSIONS

The steering arm dimensions given in Fig. 12 will aid checking the steering arms after accident damage.

When a steering arm is found bent, it must be removed, straightening should not be attempted.

WHEEL LOCK ANGLES

See "GENERAL DATA SECTION".

The front wheel lock angles can be checked by using turntable gauges under the front wheels and adjustments are made by fitting or removing shim washers under the head of the rear steering arm attachment bolt.

Should it ever be necessary to make any alteration to the shims, the front wheel, brake drum or brake caliper and hub are removed to gain access to the nut on the end of the rear steering arm bolt.

BALL PIN HEIGHTS (Figs. 15, 16 and 17)

After an accident in which the steering may have become damaged, the ball joint heights should be checked.

The ball joints in the steering linkage occupy positions that ensure the minimum front wheel reaction to suspension movement caused by rough road surfaces. Incorrect ball pin heights will alter the ball pin positions and tend to transmit "road shock" to the steering wheel.

Reference to the illustrations will show the ball pin heights as dimensions from the centre lines of both lower wishbone link fulcrum pin and the eye bolt in the opposite end of the link.

As these centre lines are rarely parallel to the level floor and vary with the castor angle, ball pin heights CANNOT be checked from a surface plate positioned beneath the car.

Suitable equipment for checking ball pin heights is illustrated and is similar to that used on other cars of Rootes Group manufacture.

To check

1. The ball pin height dimensions are not affected by suspension movement and can therefore be checked with the car either ladened or unladened.

2. Remove both outer track rods completely to obtain access to the points from which the dimensions are taken.

3. Set up the checking fixture as shown in Fig. 15.

4. Using suitable measuring equipment, check the height of the lower inner fulcrum pin centres and the two ball pin hole centres of the centre track rod from the fixture measuring face. The difference between these dimensions should fall within the figure quoted in the illustration.

5. The dimensions between the lower wishbone link eye bolt centres and measuring face on the underside of the steering arms should be checked in a similar manner.

6. When any of these dimensions are in excess of the specified figures the cause should be determined and corrected.

DIAGNOSING STEERING FAULTS

Steering complaints can arise from causes other than incorrect steering alignment and accident damage.

The following possible causes, which tend to have an adverse effect on steering ability should be checked and eliminated.

1. Lack of lubrication.
2. Underinflated tyres.
3. Tyres unequally worn.
4. Tyres of a different tread pattern.
5. Front wheels out of balance.
6. Front hubs requiring adjustment.
7. Defective front springs.
8. Faulty shock absorbers.
9. Loose steering and other components.
10. Wear in steering components.
11. Incorrectly adjusted steering unit.
12. Rear axle out of alignment.

In the event of early or excessive tyre wear the following should be checked.

1. Front wheel camber angle.
2. Front wheel alignment (toe-in).
3. Castor angle.
4. King pin inclination angle.
5. Ackerman angles (toe-in turns).
6. Ball pin heights.
7. Accident damage.

DICTIONARY OF TERMS

UPPER LINK = Upper control arm
LOWER LINK = Lower control arm
FULCRUM PIN = Control arm pivot shaft
STUB AXLE = Steering knuckle
STEERING ARM = Knuckle lever
ROCKER SHAFT = Sector or pitman shaft
IDLER UNIT = Relay assembly
SWING LEVER = Drop or pitman arm
TRACK ROD = Tie rod
ACKERMAN ANGLES = Toe-out on turns or steering geometry

GAP GAUGES

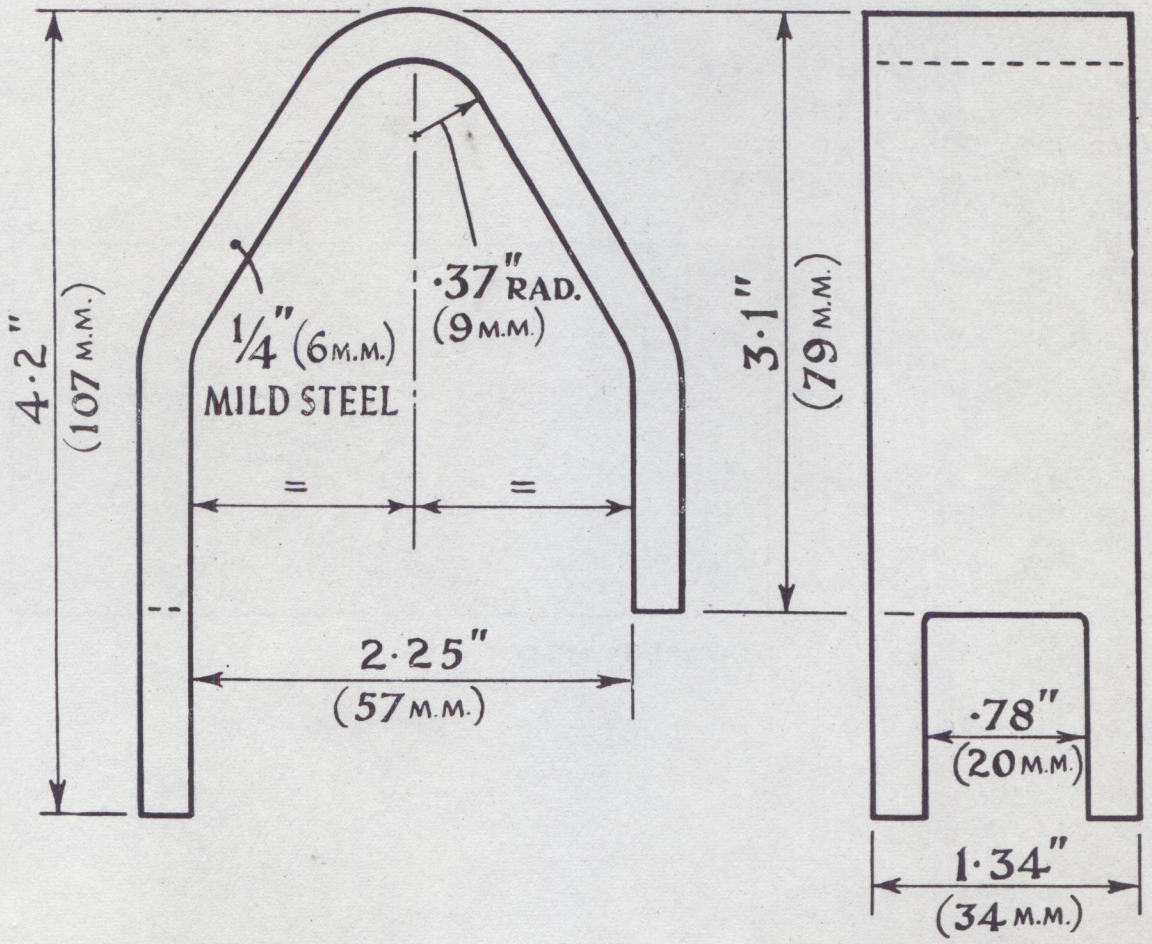

Fig. 13. *The dimensions of the front gap gauges for Series I to early III cars*

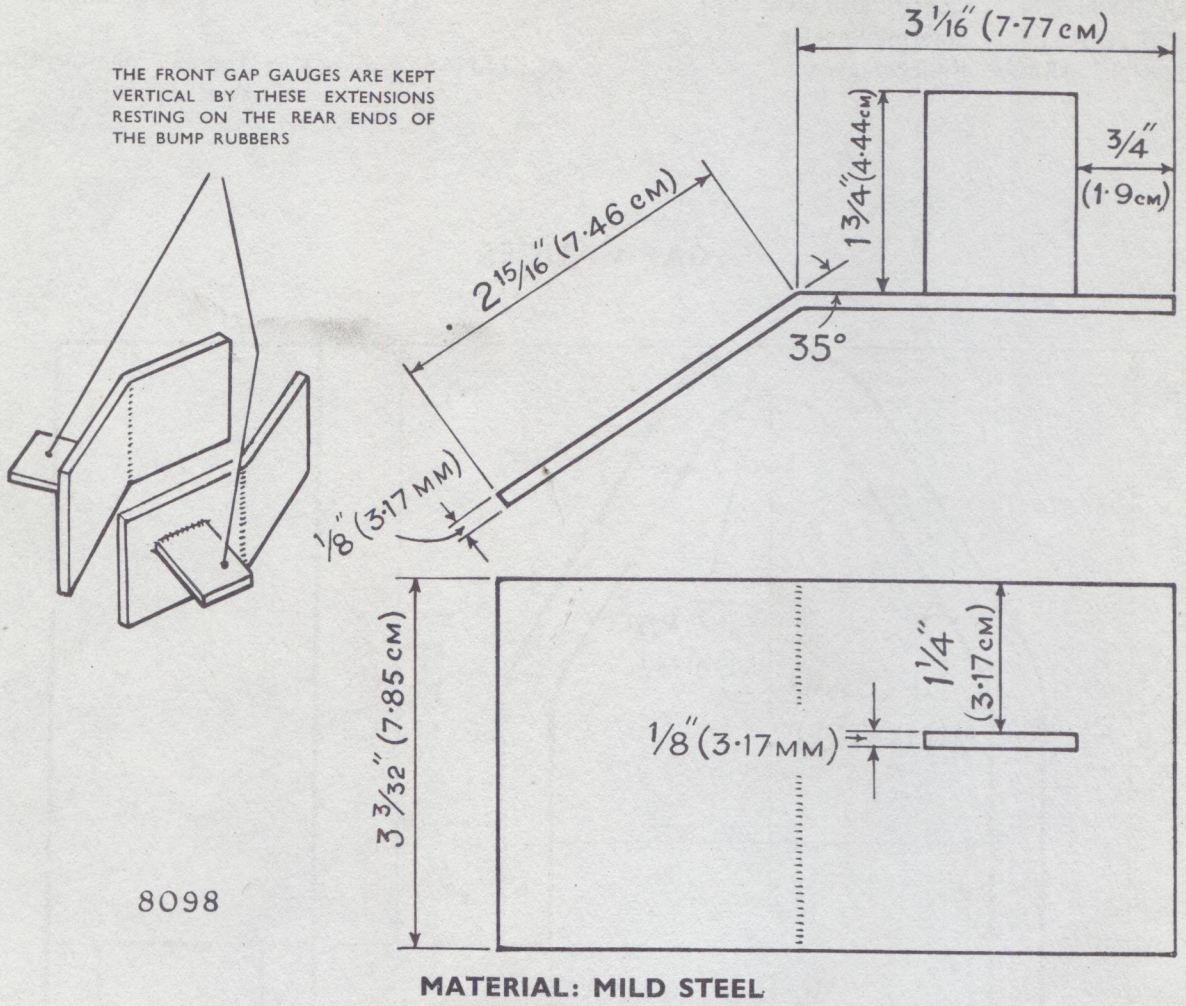

Fig. 13A. *The dimensions of the front gap gauges for later Series III cars onwards; left-hand drawn, right-hand symmetrically opposite Alternatively the gap gauges can be purchased from Messrs. V. L. Churchill & Co. Ltd., under RG.406*

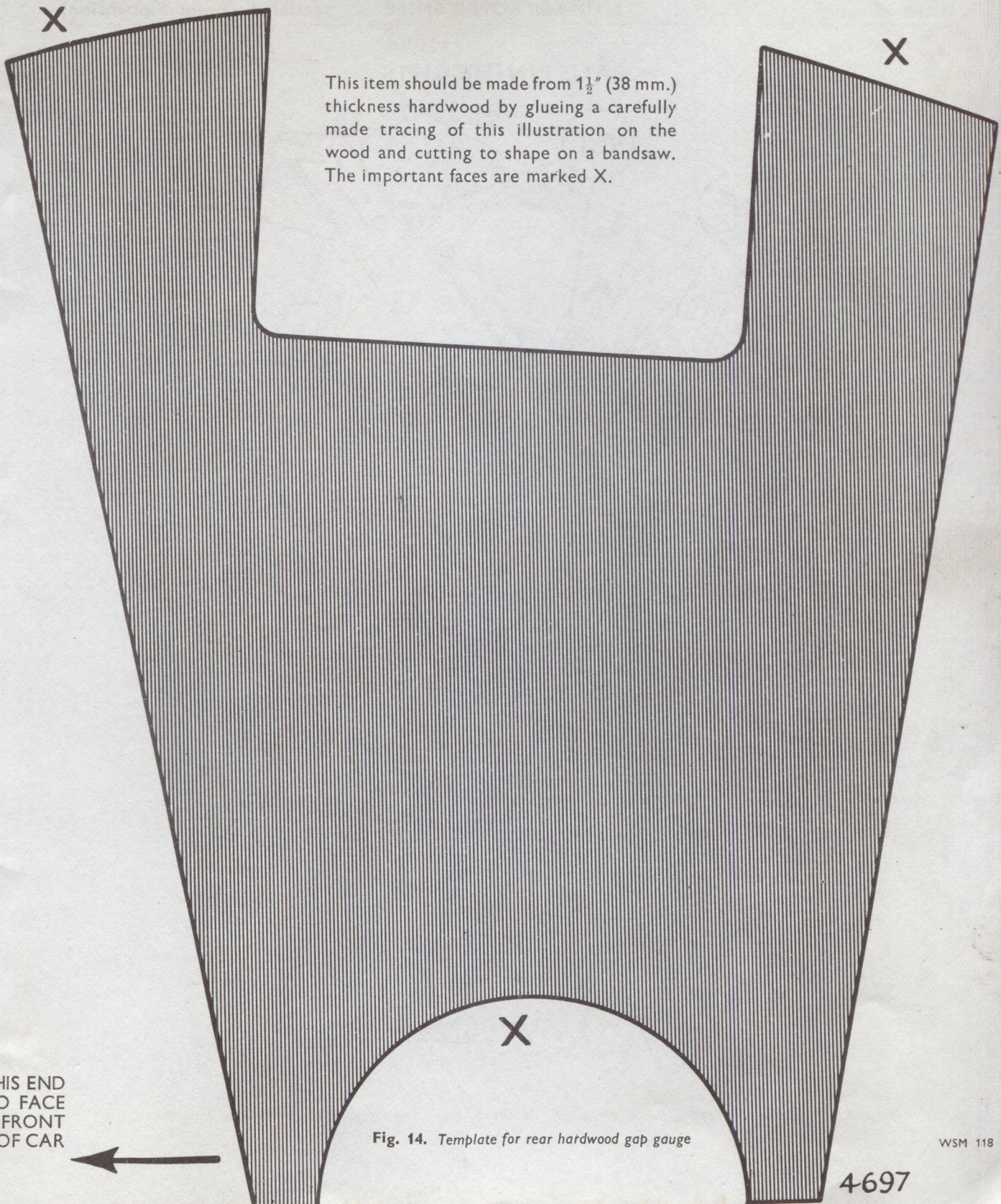

Fig. 14. *Template for rear hardwood gap gauge*

4697

BALL PIN HEIGHTS

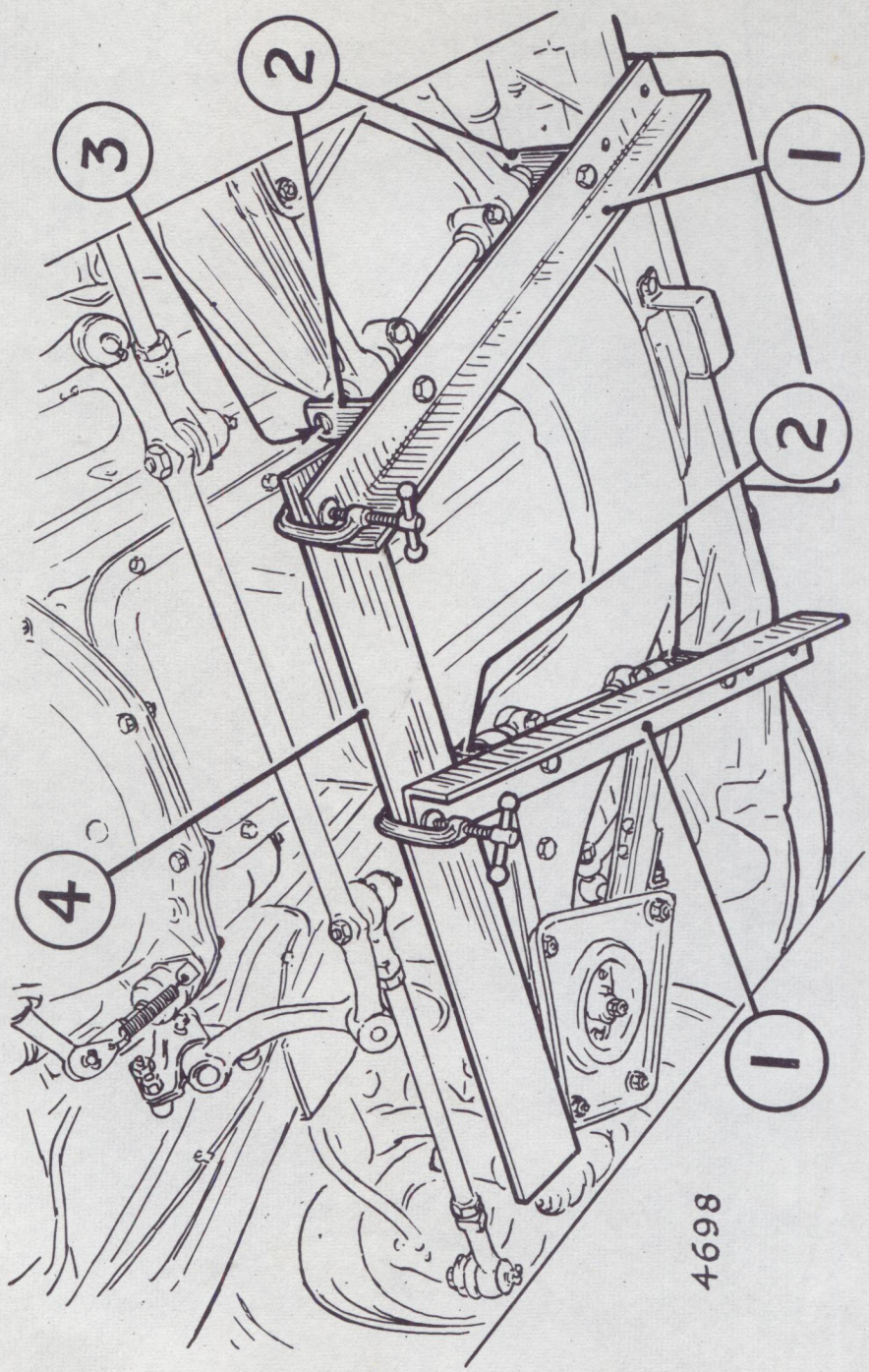

Fig. 15. *Ball-pin height checking fixture in position. Details of items 1 to 4 are given in the following illustration*

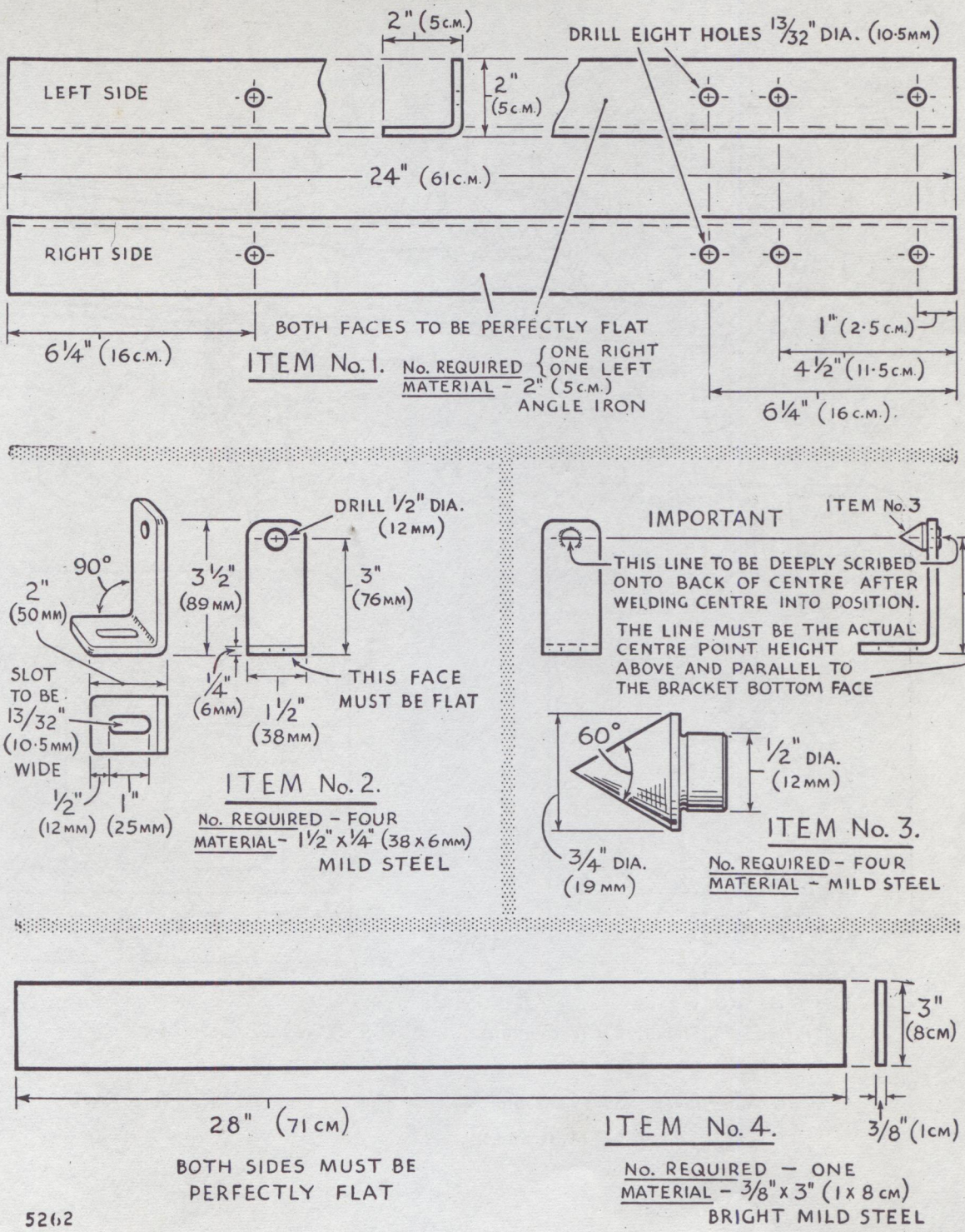

Fig. 16. *Details of ball pin height checking fixture*

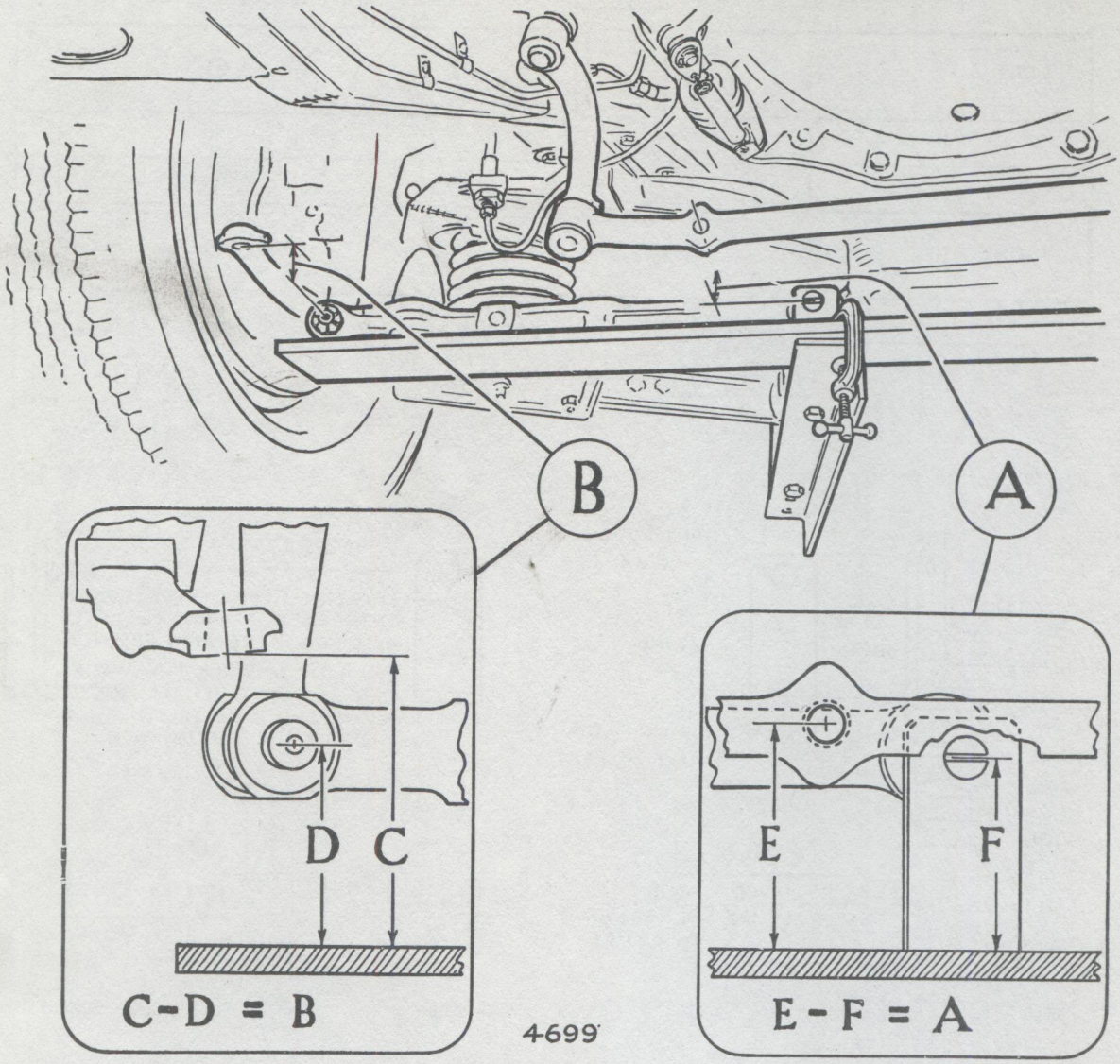

A = Swing lever ·35″ (8·89 mm.).
·19″ (4·82 mm.).
Idler lever ·39″ (9·90 mm.).
·17″ (4·31 mm.).

B = 1·32″ (33·52 mm.).
1·14″ (28·95 mm.).

Fig. 17. *Dimensions and positions for checking ball pin heights*

CROSSMEMBER MOUNTINGS

A change in design for both front suspension crossmember mountings, crossmember to sidemembers and steady arm to underframe, was introduced on Series V and Imperial Cars onwards.

SIDEMEMBER MOUNTINGS

Two types have been used, they are not interchangeable and must be renewed in pairs.

Series I to IV cars (Fig. 18)

Two metal pressings bolted together enclosing four separate rubber pads and a welded assembly; this type can be dismantled and replacement parts fitted as necessary.

To remove and refit (Fig. 18)

1. Remove the crossmember from the car, see under "To remove and refit—Suspension Assembly".
2. Identify the position of the two mountings within the sidemember(s) and whether left or right; remove from the sidemember by withdrawing five bolts and washers each.
3. Refitting is the reverse of the removal sequence but particular attention must be given to the following:—
   (i) The curved edge of the mounting is positioned towards the outside of the car and the side grooves run downwards towards the front of the car.
   (ii) One mounting is secured with the bolts central in the slotted holes while the bolts of the second mounting are left slack.
   (iii) The crossmember is secured with four bolts, ensure that the bosses of the four tappings locate the recesses in the crossmember and nip up the four bolts. Tighten the two rear bolts of the second mounting and detach the crossmember. Examine the position of the second mounting about its five bolts and when it is seen to be off centre, reset the position of both mountings so they become balanced.

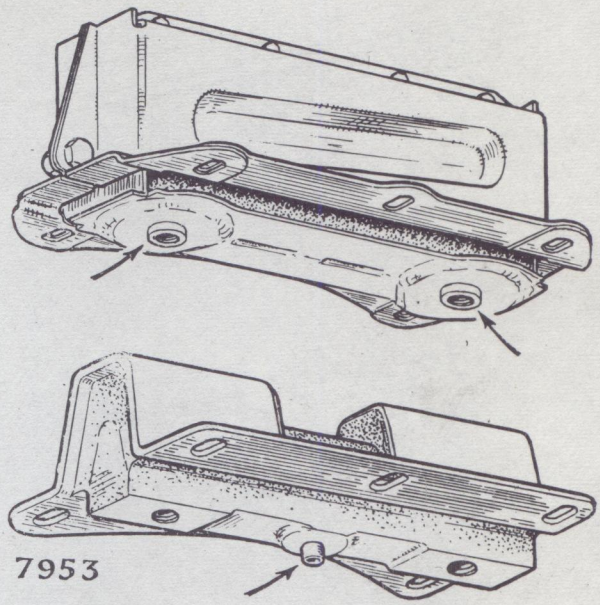

Fig. 18. *The two types of sidemember mountings*

Top: For Series I to IV cars, the arrows indicate the two bosses which locate the crossmember; right-hand shown, left-hand symmetrically opposite

Bottom: For Series V and Imperial cars onwards, the arrow indicates the dowel which locates the crossmember

To dismantle and reassemble (Series I to IV cars)

1. Identify and remove the four rubber pads and welded assembly from inside the two pressings by removing six nuts, bolts and washers.
2. Reassembly is the reverse of the dismantling sequence but particular attention must be given to the following:—
   (i) The large rubber pads are fitted into the side pressings according to the grooves therein and the small rubber pads are fitted against the end faces of the welded assembly.

Series V and Imperial cars onwards (Fig. 18)

A metal and rubber bonded component, these can only be renewed and then always in pairs.

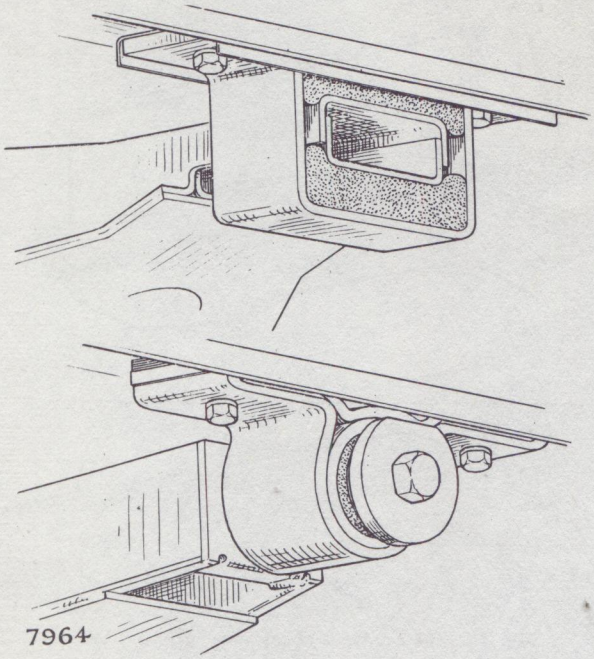

Fig. 19. *The two types of steady arm mountings*

Top: For Series I to IV cars, note the thicker rubber pad beneath the steady arm

Bottom: For Series V and Imperial cars onwards, note the shim pack above the bush saddle

To remove and refit (Fig. 18)

These sequences are similar to those for Series I to IV cars but these mountings are not handed and the crossmember is located by a dowel protruding from the bottom face of each mounting.

STEADY ARM MOUNTINGS

Two types have been used, they are not interchangeable and can be removed without removing the crossmember from the car.

Series I to IV cars

Two rubber pads, fitted one above and one below the rectangular-shaped steady arm.

To remove and refit (Fig. 19)

1. Remove the clamp, two rubber pads and retaining plate from the steady arm and underframe by withdrawing two bolts and washers.
2. Refitting is the reverse of the removal sequence but particular attention must be given to the following:—
   (i) Position the thinner rubber pad above the steady arm with the retaining plate on top, upturned edges pointing downwards.
   (ii) Position the thicker rubber pad in the clamp and fit beneath the steady arm.

Series V and Imperial cars onwards

A metal and rubber bonded bush mounted on a spigot protruding from the steady arm.

To remove and refit (Fig. 19)

1. Remove the bush saddle and identify the number of shims above by withdrawing two bolts, washers and a "U"-shaped clamp.
2. Withdraw the distance piece and rubber bush from the steady arm spigot by removing a bolt, washer and "D"-shaped washer.
3. Refitting is the reverse of the removal sequence but particular attention must be given to the following:—
   (i) The "D"-shaped washer is fitted so its flat edge is in the twelve o'clock position.
   (ii) A pack of, normally five, shims are fitted between the bush saddle and the underframe; the shims are slotted to facilitate assembly and are fed in from the rear. The steady arm must not be in tension.

SPECIAL CARS (SERIES V ONWARDS)

Certain special Series V cars have no power-assisted steering and when checking the front suspension, it will be necessary to refer to the original castor angle given in the "General Data Section". The differences are in the steering arms and stub axle carriers which are not interchangeable with those fitted to Series V and Imperial cars equipped with power-assisted steering.

REAR AXLE

SECTION G

CONTENTS

(15 Pages)

	Page
GENERAL DESCRIPTION	2
OIL SEALS	2
AXLE DRIVING SHAFTS—To remove and refit	2
AXLE DRIVING SHAFTS—To dismantle and reassemble	3
DIFFERENTIAL UNIT—To remove and refit complete unit	4
DIFFERENTIAL UNIT—To dismantle and reassemble differential assembly and crown wheel	4
BEVEL PINION—To dismantle, readjust and reassemble	6
ADJUSTMENT OF CROWN WHEEL TO PINION	8
TOOTH CONTACT CHART	13
REBUILDING DIFFERENTIAL UNIT—Emergency method	14
AXLE CASING BREATHER	15
REAR AXLE—To remove and refit	15
PARCO-LUBRISING OF CROWN WHEEL	15

REAR AXLE

GENERAL DESCRIPTION

The rear axle is of the semi-floating type, incorporating a hypoid bevel drive. In design it is essentially straightforward, but as the position of the crown wheel relative to the pinion requires accurate adjustment, the original setting should remain untouched as far as possible.

Provision is made for the adjustment of all roller bearings in the differential and bevel pinion assembly. The complete differential unit with crown wheel and bevel pinion is detachable as a unit from the axle assembly should it become necessary to carry out any work on the differential unit.

The axle ratio (see also "General Data") is stamped on the end of the pinion shaft, in order to prevent confusion with similar parts of Group manufacture.

Later models have a larger Crown Wheel and Pinion with larger Pinion bearings. Use Tool No. RG 329-1 for these models.

OIL SEALS (see Fig. 1)

See also "Oil Seals", Section Q.

Bevel Pinion Housing Oil Seal

In the bevel pinion housing an oil seal (28) is fitted to the rear of the propeller shaft driver coupling.

These seals only operate in one direction and therefore they should be fitted with the garter spring facing the rear axle. The seal should be renewed in course of any overhaul or repair operations which involve the dismantling of the bevel pinion assembly. It should be dipped in oil before pressing into the housing.

Hub Oil Seals and Deflectors

A conical deflector (37) is located inside each end of the axle casing by the outer track of each axle shaft bearing (See also Fig. 16).

A lip type oil seal (40), mounted in a circular plate (41) and backed up by an oil catcher, fitted to the hub side of each brake back plate, ensures adequate oil retention.

The annular oil catchers (42) drain through holes in the brake backing plates, thus ensuring that excess oil is diverted from the brake shoes.

It is obviously important that the drain holes from the catchers should be kept clear, otherwise the catchers may become overfilled and oil will eventually reach the brake linings. The joints between the catcher flange, the oil seal casing flange and the brake backing plate must be sealed with liquid jointing compound.

AXLE DRIVING SHAFTS

To remove and refit (see Fig. 1)

It is most important that those responsible for the repairs of this rear axle should know that the design of the rear hub bearing assembly is such that serious damage will result from any attempt to remove an axle driving shaft by any method other than the following:—

Remove road wheel.

Remove set screw securing brake drum.

Remove brake drum.

Disconnect handbrake operating cable fork from lever on backing plate by removing clevis pin. Note position of washers.

Release brake pipe connections from backing plate.

Protect brake pipe connections against the ingress of foreign matter. Remove nuts and

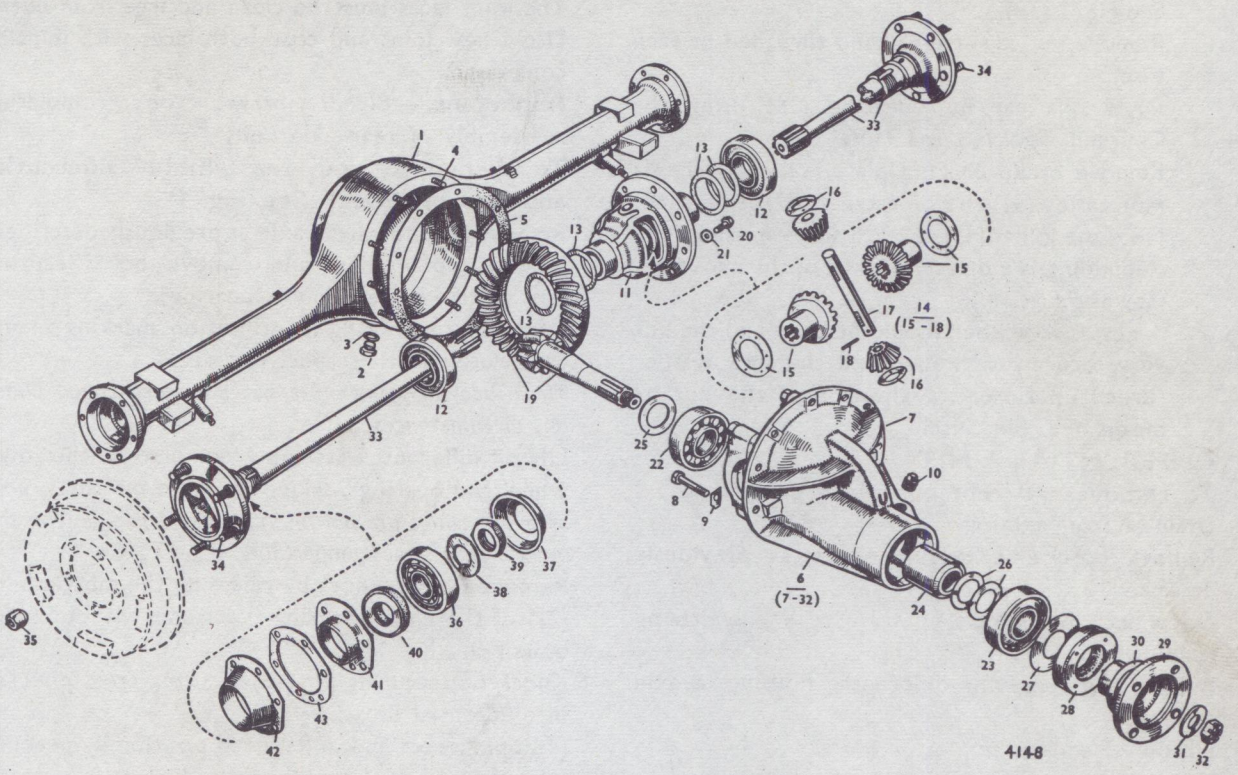

Fig. 1. *Exploded view of rear axle*
(For Two Piece differential box, see Fig. 3)

bolts securing brake backing plate to flange on axle casing.

Draw out driving shaft complete with brake backing plate and hub bearing using Churchill Tool No. RG.16A.

Remove the oil deflector (37, Fig. 1), if this is not dislodged by the shaft.

Secure the tool to the hub by means of the road wheel nuts and drive the sliding weight smartly away from the vehicle. *Do not attempt to drive out the shaft by striking the brake backing plate, as this procedure can only cause damage.* Refitting is a direct reversal of the above. Remember to fit the conical deflector (37) before entering the shaft assembly into the axle casing. The shaft and bearing can be tapped into place with a mallet. (See also notes on Oil Seals and Grease Retainers).

AXLE DRIVING SHAFTS

To dismantle and reassemble (see Fig. 1)

When it is necessary to examine the hub oil retainers, as described in preceding paragraphs, the axle shaft (having been removed) must be dismantled as follows:—

Secure the shaft in a vice.

Release the turned-up side of lock washer. See Fig. 1 (38).

Remove nut (39) (right-hand threaded in each case).

Draw off rear hub bearing (36) using the Churchill Tool No. RG.330A.

Remove brake backing plate, oil seal (Fig. 1) (40), casing (41) and oil catcher (42) from shaft. Note the joints (43) on each side of casing (41).

Rebuilding is a direct reversal of the above. (See also Fig. 16.)

A new lock washer should be used and the nut very securely tightened and the lock washer turned up closely to the side of the nut by means of a cold chisel.

DIFFERENTIAL UNIT

To remove and refit complete unit

Drain oil from axle case.

Remove both axle driving shafts as previously described.

Disconnect propeller shaft from rear axle driving coupling.

Remove nuts securing differential housing to axle casing.

Lift out assembly.

When replacing the assembly, the operations are a reversal of the above.

The joint faces must be clean and free from burrs. Use a new joint and coat both faces with jointing compound.

Important — Bleed brakes on completing reassembly of rear axle unit.

To dismantle and reassemble Differential and Crown Wheel (See Fig. 1)

Remove assembly from axle as previously described.

Release tab washers and remove bolts securing caps of differential support bearings.

Remove caps, noting identification marking on one cap relative to its respective side.

These bearing caps must not be interchanged under any circumstances.

Lift off differential assembly complete with crown wheel and bearings, *taking care that the outer races of the bearings are not interchanged one side with the other. This is most important.*

Remove crown wheel by releasing the tab washers (21) of the eight securing bolts and withdraw the bolts (20) (Fig. 1).

Knock out securing pin (18) securing cross pin (17) in differential box.

(This pin is retained in its fitted position by peening over the end of the drilling in which it is located)

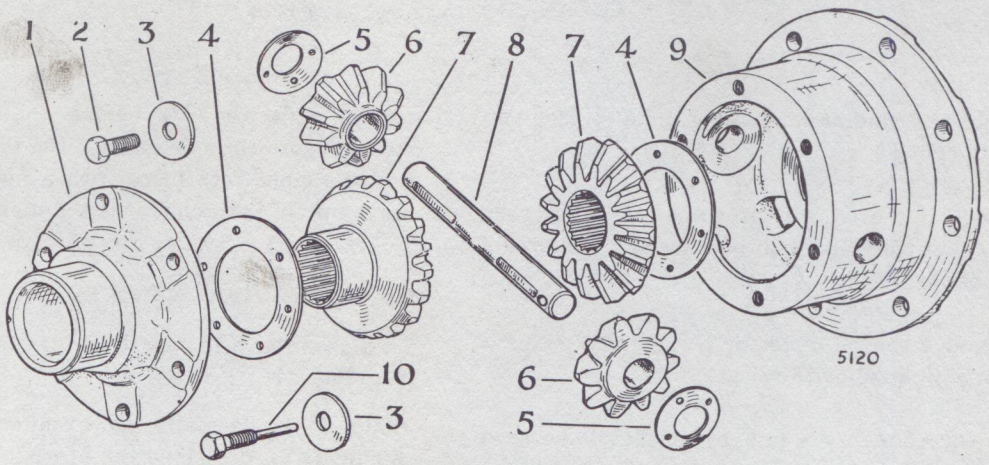

Fig. 3. *Exploded view of two-piece differential box*

KEY

1. Differential box, off-side portion
2. Bolt } securing differential box
3. Washer }
4. Bevel wheel thrust washer
5. Bevel pinion thrust washer
6. Bevel pinion
7. Bevel wheel
8. Cross-pin
9. Differential box, near-side portion
10. Cross-pin locating bolt

Push out cross pin. Differential pinions complete with thrust washers (16) can then be carried round and brought out through the wide openings in the differential box.

Differential wheels and thrust washers (15) can now be taken out of differential box through the wide openings.

Reverse the above procedure for reassembly of the differential gears. The reassembly of the cross pin (17) and fitting of the securing pin (18) will be facilitated by turning the cross pin by means of a punch inserted in the securing pin hole at one end. The end of the drilling in which the security pin is located must be re-peened for security.

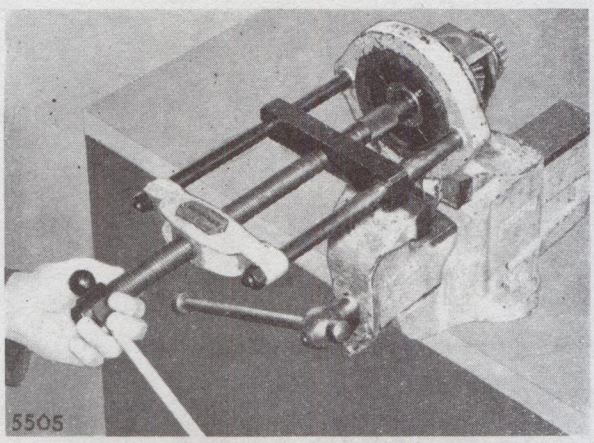

Fig. 4. *Removal of differential box bearings*

Refitting of the crown wheel is a reversal of the removal procedure but the following points should be noted:—

1. The faces of both crown wheel and differential box should be thoroughly clean, otherwise there is every possibility of mis-alignment after reassembly.
2. The tab washers for the eight set screws must be renewed.

Note

On cars having a two-piece differential box the above procedure is changed as follows (see Fig. 3):—

Having removed the crown-wheel release the tab-washers of the six set-screws which secure the two halves of the differential box together.

Undo and remove the set-screws.

One set-screw also forms a dowel to locate the cross-pin. Note its position.

It will now be possible to remove one half of the differential box from the other, also to push out the cross-pin. The differential wheels, pinions, and thrust washers can be removed.

Reverse the above procedure for reassembly.

When pushing in the cross-pin do so with care, ensuring that the dowel hole in the cross-pin lines up with that in the differential box.

The faces of both halves of the differential box must be thoroughly cleaned before reassembly.

Always use new tab-washers for the six securing set-screws.

Differential Carrier Bearings

Should it be found necessary to renew the bearings which carry the differential assembly, the old inner races may be withdrawn, using the Churchill Bearing Remover Tool No. RG.4221, and shown in operation in Fig. 4. **Note the number and thickness of shims beneath the bearing on each side.** Inner and outer portions of these bearings must be renewed as a pair, as is the case with all

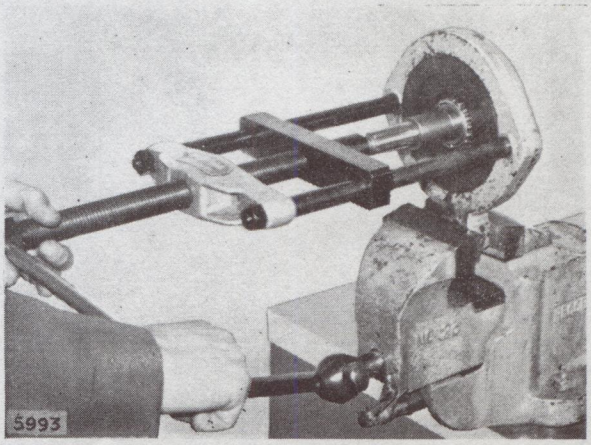

Fig. 5. *Removal of pinion bearing*

bearings of this type. It is not permissible to renew either inner or outer portions separately.

OVERHAUL

Suitable jigs are available from Messrs. V. L. Churchill and Co. Ltd., Tool No. RG.329. When adjustment is necessary it can be carried out by use of these jigs, the application of which is facilitated by the fact that the locating faces on the crown wheel and pinion are machined in manufacture to very close limits. The use of these jigs will be described ater.

Bevel Pinion—To dismantle

Remove split pin, nut and washer and withdraw propeller shaft driver coupling, this will come away easily as it is located on splines. *On some cars a self-locking nut is used to secure the driver coupling and no split pin is fitted.*

Tap out the bevel pinion, using a mallet to avoid damaging threads. The pinion shaft shims (26) (Fig. 1) and bearing spacer (24) which have become detached with the pinion shaft, should be removed.

The inner race of the bevel pinion rear bearing should then be removed from the pinion using

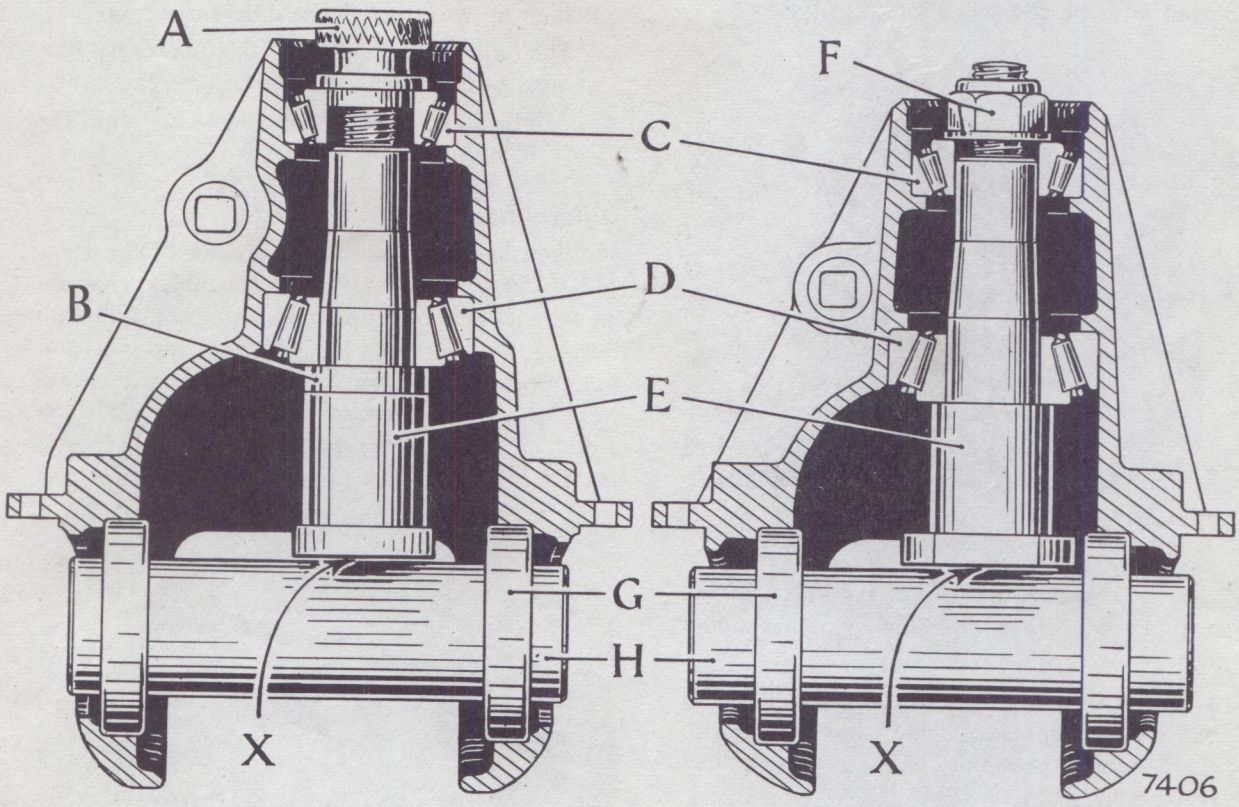

KEY

A. DUMMY NUT (LARGE DIFF.)
B. SPACER COLLAR (LARGE DIFF.)
C. FRONT BEARINGS
D. REAR BEARINGS
E. DUMMY PINION
F. DUMMY NUT (STANDARD)
G. DUMMY BEARINGS
H. DUMMY CROSS-PIN

Fig. 6. *Method of reckoning correct shimming between pinion head face and bearing using RG.329 or RG. 329-1 for larger gears.*

Churchill Tool No. RG.4221B (shown in operation in Fig. 5). Remove the shims (25, Fig. 1), next to the pinion head. Use adaptor No. RG.4221B-30 for latest big differential.

To remove the front pinion bearing and oil baffle (27) (Fig. 1) it will be necessary to withdraw the bevel pinion oil seal (use any internal claw type extractor).

Inner and outer races of the bevel pinion bearings must not be renewed separately as these are mated in manufacture. Failure of a bearing necessitates renewal of the complete bearing assembly, comprising inner race, rollers and cage and outer race.

The outer races of the bevel pinion bearings, should the bearings require replacement, can be removed by driving out with a hammer and drift, the drift being located on the inner face of the bearing in each case. The bearing recesses must be quite clean. The new races should be tapped into position with a suitably sized brass drift until they are *fully home:* this can be ascertained by a hard ringing sound as the drift is struck with the hammer.

BEVEL PINION

To reassemble

Method of obtaining pinion Setting Distance, and setting Pinion Pre-load.

Take the dummy pinion and place on it the inner half of the rear bearing. DO NOT FIT ANY SHIMS OR THE SPACER.

Make sure the bearing inner race is seated fully home, and that no foreign matter is present between the bearing and the dummy pinion head.

NOTE. For all units other than the latest large type differential, fit the dummy pinion to the casing, insert the front bearing, washer and dummy nut. (See Fig. 6). For the latest type differential, fit the spacing collar Tool No. RG.329-1 to the dummy pinion, and when fitting the dummy pinion to the housing, use dummy nut No. RG.329-1. (See Fig. 6). Tighten the nut by hand until a small pre-load is felt on the bearings, indicated by a resistance when rotating the pinion.

Rotate the dummy pinion thoroughly, and check that pre-load is obtained.

Fit the dummy cross-pin and dummy bearings. Make sure that all parts are clean, and that the dummy bearings are correctly seated and abutting the shoulders in the casing.

Fit the bearing caps and tighten the bolts.

It may be found that in some instances the caps do not tighten down on the dummy bearings. Should this be the case, it is permissible to insert a piece of paper between the cap and the dummy bearing, in order to obtain a grip.

With this procedure completed, measure the gap between the dummy pinion head and the dummy cross-pin with feeler gauges.

This measurement is the thickness of the shims required to be placed next to the pinion head when reassembled. However, it has been found in practice, that when the actual bearing is pressed on to the actual pinion shaft, the bearing increases in length to the extent of approximately ·002″ (·051 mm.).

This dimension (·002″) should, therefore, be subtracted from the dimension obtained with the feeler gauges between the pinion head and the cross-pin. i.e. Existing gap (say) ·030″. Subtract ·002″ Shims required = ·028″.

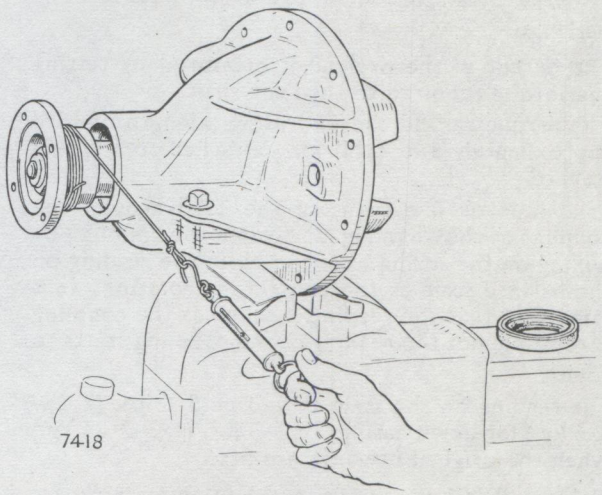

Fig. 7. *Checking torque loading (pre-load) for pinion bearings*

Remove the dummy cross-pin and dismantle the dummy pinion.

Now take the *Actual* bevel pinion and place on it the correct thickness of shims next to the pinion head.

NOTE. The shims for the larger type differential are slightly different to the standard size shims. In emergency the standard shims may be used on the larger unit.

Press the inner race of the rear bearing on to the pinion.

Fit the bearing spacer without shims and fit the assembly with bearings, into the housing.

Do not fit the oil seal.

Slide the coupling on to the pinion spline and fit the actual nut and washer.

To Obtain Pre-load

Hold the coupling with Tool No. RG.421 and tighten the nut by easy stages, rotating the pinion while doing so. (See Fig. 8)

Should it become impossible to rotate the pinion before the nut is tight, shims must be placed between the front bearing and the spacer tube.

Keep testing and turning the pinion until, with the nut fully tightened to the torque figure given in the General Data Section, a pre-load exists on the bearings.

The extent of the preload is measured by testing the torque required to turn the shaft.

The torque can be checked using a length of cord approximately 3 ft. (1M) long attached to a spring balance.

Take four or five turns of the cord around the coupling as shown in Fig. 7. Rotate the coupling by pulling on the spring balance. Note the reading on the balance scale as the coupling is rotating. It is important that the reading is taken as the coupling is rotating, not the reading as the coupling starts to rotate.

The reading on the scale should be 5–8 lbs. (2·25–3·6 kg.) for new bearings or 3–5 lbs. (1·3–2·25 kg.) when the original bearings are fitted.

NOTE.—0·001 in. (0·025 mm.) in shim thickness makes a difference of approximately 4 lb. ins. (0·05 kg.m.).

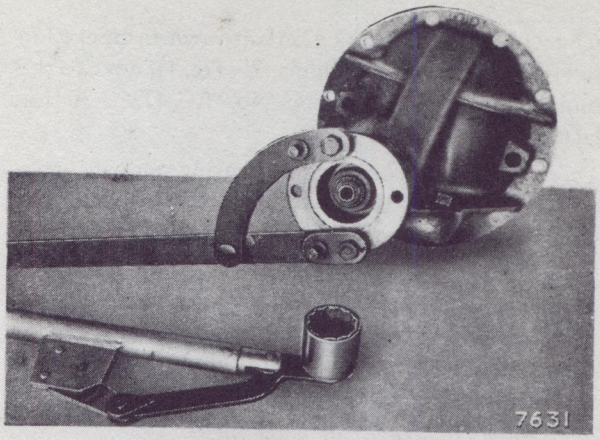

Fig. 8. *Coupling Tool RG421*

Remove the nut, coupling driver and washer.

Fit the oil seal. The outer case of the oil seal should be coated with a quick dry jointing compound.

Fit the coupling driver, washer and new self-locking nut. Tighten the nut to a torque given in the General Data Section.

ADJUSTMENT OF CROWN WHEEL TO PINION

(Main method—using special jigs)

Having carried out the preceding operations, remove the differential box bearings, as previously described, and shims. In their place fit the dummy bearings **without** shims. Place the differential box assembly, complete with dummy bearings, in position in the housing. Replace the bearing caps and tighten the securing bolts.

By means of the Churchill Tool No. RG.4222, see Fig. 10, and using a mallet, tap the dummy bearings into close contact with the differential box, in which position they must be maintained during all stages of the adjustment of crown wheel in relation to the bevel pinion.

Checking Backlash between Crown Wheel and Pinion

Next mount a clock or dial gauge as shown in Fig. 9.

The gauge should be attached to the casing in such a position that its stylus bears on the heel of one of the crown wheel teeth. Obviously, the

stylus should be arranged so that the gauge registers the full amount of the backlash: therefore it will be found convenient to use the 90° adaptor as shown.

This fitting is usually supplied with clock or dial gauge sets.

Having mounted the clock gauge, tap the differential assembly and crown wheel in the requisite direction so that the backlash between crown wheel and pinion is between ·005″ (·127 mm.) and ·009″ (·229 mm.) say ·008″ (·203 mm.). *When actually driving the differential assembly during THIS PROVISIONAL ADJUSTMENT, it is, of course, necessary to lift the clock stylus or the gauge may be damaged.*

Carry out the check for correct backlash in at least three equally spaced positions on the crown wheel teeth to ensure accuracy.

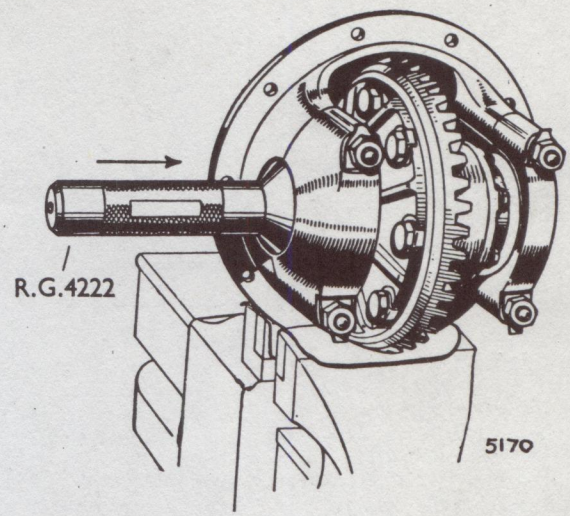

Fig. 10. *Adjustment of crown wheel to pinion*
Method of adjusting crown wheel in relation to pinion (backlash)

Checking for correct marking of Crown Wheel teeth (see Figs. 11 and 17)

This is the next operation and the maximum importance must be attached to the following procedure:—

Paint the teeth of the crown wheel thinly with a light paste made of yellow ochre powder and engine oil or any suitable proprietary marking compound and rotate the crown wheel to obtain an impression of the pinion tooth bearing on the crown wheel teeth. Apply a light loading to the driven coupling to assist this process.

When correctly meshed, the marking to be obtained should be as shown in Fig. 11, i.e., the area of contact on the teeth of the crown wheel is between the crest and the root of the tooth but is considerably nearer the toe (inner or thin end) than the heel (outer or thick end) of the tooth. Adjustment is effected by using the Churchill Tool No. RG.4222 to drive the assembly in the requisite direction, through the medium of the dummy bearings.

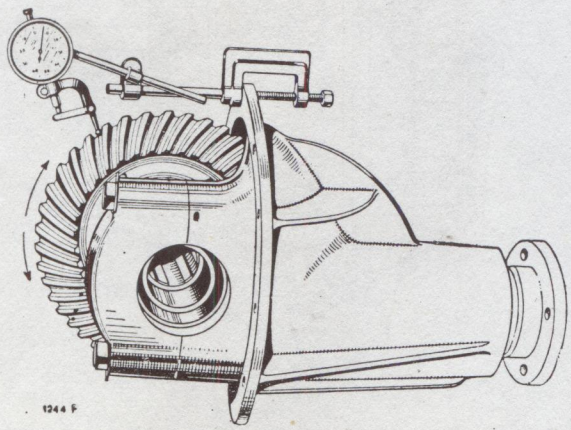

Fig. 9. *Checking backlash with clock gauge*

The final amount of backlash, whether nearer to ·005″ (·127 mm.) or to ·009″ (·229 mm.) will depend on the most favourable tooth marking obtainable.

Note

As the axial position of the bevel pinion in relation to the crown wheel is predetermined, by the use of

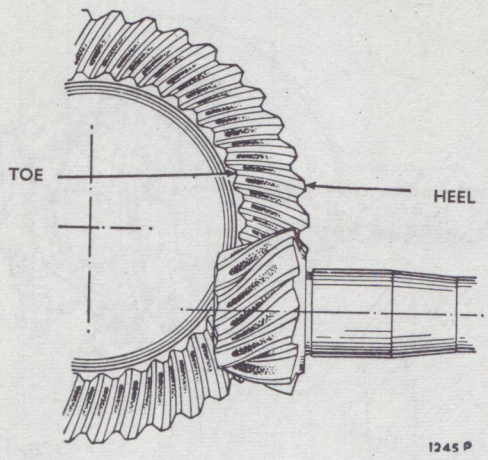

Fig. 11. *Correct marking of crown wheel teeth*

jigs, as previously described, adjustment for backlash and tooth marking is confined to side adjustment of the crown wheel assembly in relation to the bevel pinion.

Assessment of correct shimming for actual bearings to be used in final assembly of differential and crown wheel unit (see Figs. 12 and 13)

Having established the correct relationship of crown wheel to pinion in accordance with the preceding instructions, it is necessary that such relationship should be accurately maintained in the final assembly, when the actual bearings to be used are fitted in place of the dummy bearings.

This is accomplished as follows:—

With the dummy bearings in the precise axial position in which they were set in arriving at the best possible tooth bearing indications obtainable, and, of course, closely in contact with the bearing abutment faces of the differential box, check *accurately* with the feeler gauges the spaces existing between the bearing thrust abutment faces in the housing and outer faces of the dummy bearings. Fig. 12 shows the method and precise points at which to insert the feeler gauges.

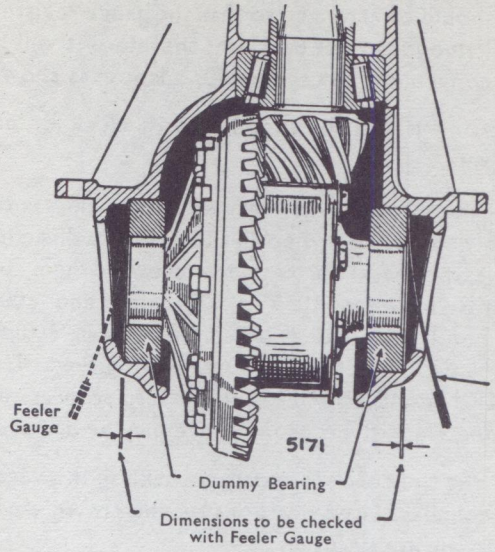

Fig. 12. *Checking for shimming thickness required for dummy bearings*

It will probably be found that the dimension varies between the two sides. These dimensions respectively would be the correct shimming thickness required *only for the*

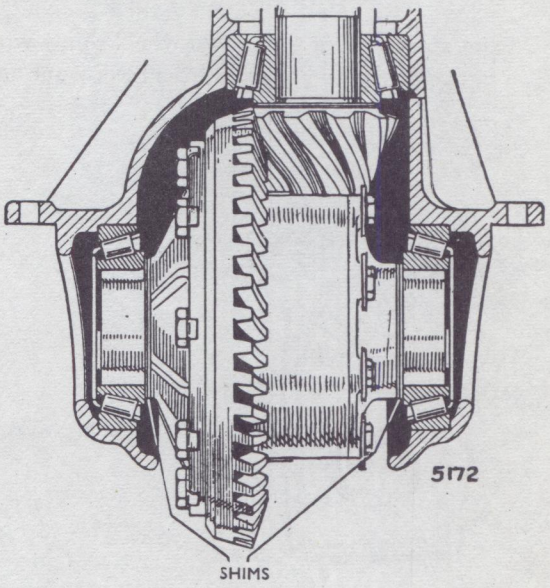

Fig. 13. *Crown wheel and differential box bearings in assembly with shims in position*

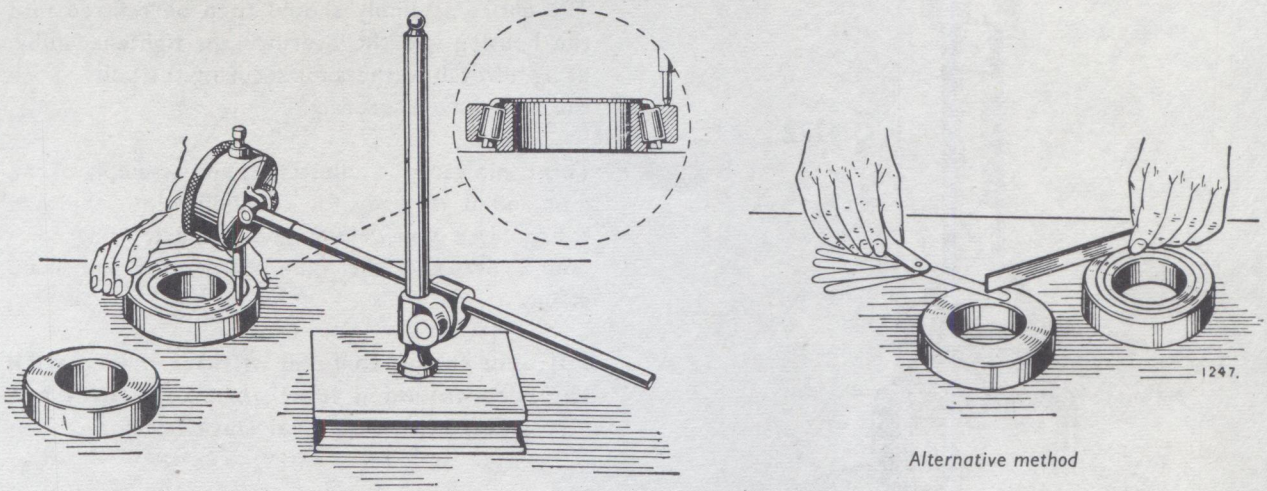

Alternative method

Fig. 14. *To measure height of differential bearing on surface plate*

dummy bearings. Having reckoned the shims for each side, note each set in respect of the side to which it applies. *Take care these are not interchanged.*

Now remove the crown wheel and differential assembly from the housing and take off the dummy bearings. The dummy bearings themselves are of precisely the same thickness.

It now remains to find the precise difference in thickness between the dummy bearing and the actual (and individual) bearings to be used. *Individual roller bearing assemblies of a type vary in overall length, even though new and identical.*

There are two practical methods of assessing the difference between the dummy bearing and the actual bearing; they are as follows:—

(*a*) *Measurement of difference in thickness between dummy and actual bearing by use of a clock or dial gauge* (See *Fig.* 14—*left*).

A clock or dial gauge is mounted on a stand and placed on a surface plate together with the dummy bearing. Set the stylus of the gauge on the face of the dummy bearing and set the gauge to zero.

Without altering the setting of the clock gauge, transfer stylus to the actual bearing assembly; if this bearing is effectively thicker (shows a plus reading on gauge), the reading now shown indicates the thickness in shims to be *subtracted* from the shims which we reckoned as correct for the dummy bearing. If the bearing is effectively thinner (shows a minus reading on dial gauge) the requisite number of shims should be *added.*

(*b*) In the absence of a clock gauge, the difference between the dummy bearing and the actual bearing can be ascertained by the use of feeler gauges and a straight edge in conjunction with a surface plate. See Fig. 14 (right).

The clock gauge method is superior and should be used in preference to the feeler gauge method.

Assess the shims required for each side separately and then add one ·002″ (·051 mm.) shim to each side, to provide the correct bearing preload.

Finally, the appropriate shims and bearing should be pressed on to its respective spigot on the differential box (see Fig. 15), and an initial amount of lubricant (Shell Spirax 90 E.P.) should be applied to the bearings.

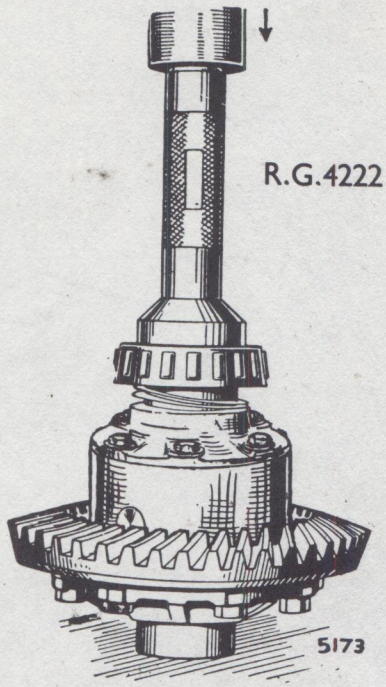

Fig. 15. *Pressing on differential bearing*

The entire assembly should then be refitted into the housing and the bearing caps tightened fully, using new tab washers for securing the bolts. Lock the tab washers securely.

This completes the adjustment and assembly of the unit and it is ready for rebuilding into the axle casing. Use a new joint and liquid jointing compound between the differential unit and main casing.

Fill axle casing to level of filler orifice with the recommended lubricant. Capacities are also given in the General Data Section.

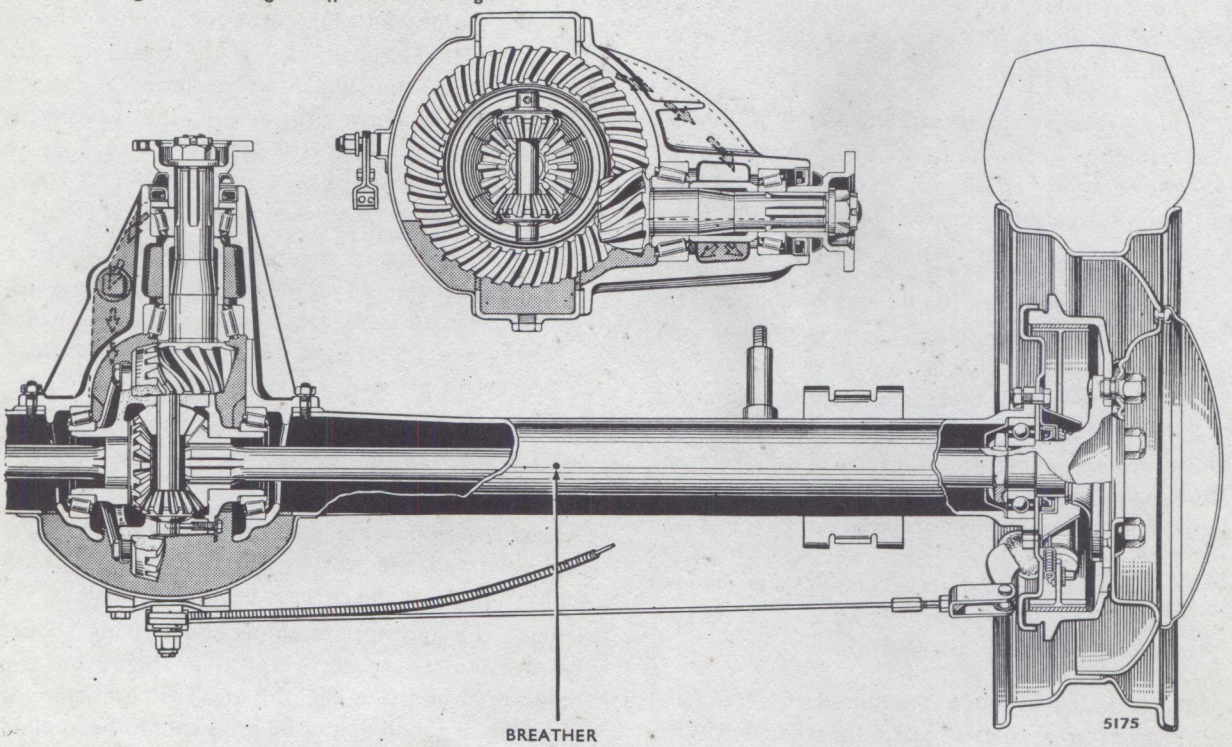

Fig. 16. *Rear axle in section*

TOOTH CONTACT CHART

Diagrams show contact on drive gear tooth.

	Tooth Contact	Condition	Remedy
A	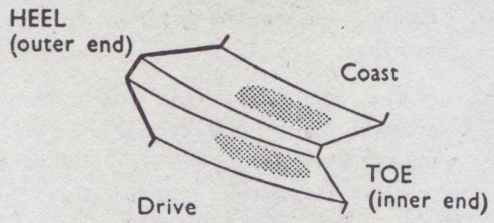	IDEAL TOOTH CONTACT evenly spread over profile, nearer toe than heel.	
B	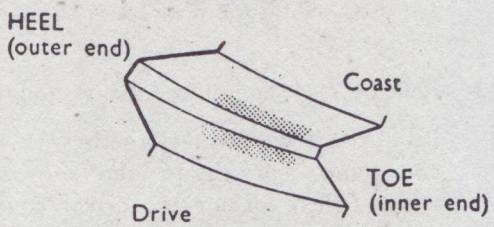	HIGH TOOTH CONTACT heavy on the top of the drive gear tooth profile.	Move the Drive PINION DEEPER into MESH, *i.e.* Reduce the pinion cone setting.
C	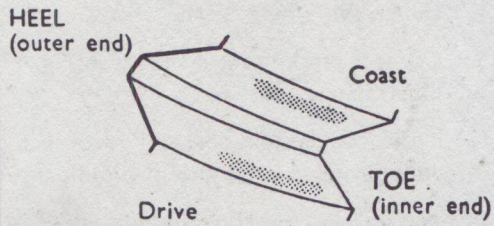	LOW TOOTH CONTACT heavy in the root of the drive gear tooth profile.	Move the Drive PINION OUT of MESH, *i.e.* Increase the pinion cone setting.
D	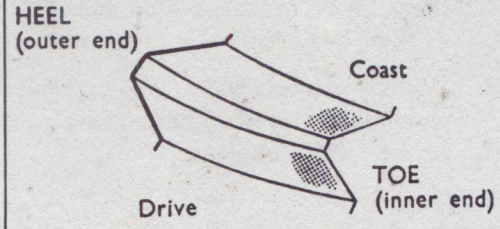	TOE CONTACT hard on the small end of the drive gear tooth.	Move the Drive GEAR OUT of MESH, *i.e.* INCREASE BACKLASH.
E	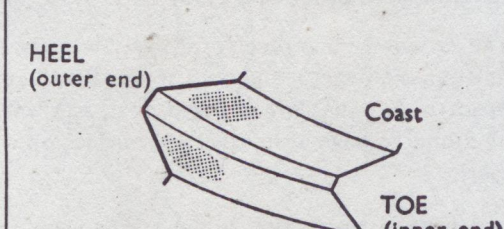	HEEL CONTACT hard on the large end of the drive gear tooth.	Move the Drive GEAR INTO MESH, *i.e.* DECREASE BACKLASH *BUT* MAINTAIN MINIMUM BACKLASH.

4097

Fig. 17

REBUILDING DIFFERENTIAL UNIT

Emergency method

When circumstances arise where urgent attention to the crown wheel and pinion or bearings is required, and the special jigs are not readily available, the differential unit may be rebuilt as follows. The time taken to perform the operation will naturally be considerably lengthened:—

1. Place ·020″/·023″ (·508/·584 mm.) thickness of shims next to the pinion head and press on the pinion inner bearing.
2. Fit the distance tube and then the original shims on to the pinion shaft.
3. Ensure that the pinion bearing outer tracks (original or new) are correctly located against their shoulders in the differential housing.
4. Insert the pinion assembly into the housing; fit the pinion outer bearing, but not the oil seal.
5. Fit driver coupling, nut and washer and tighten the nut fully in stages, rotating the pinion at the same time. Torque to the figure given in the General Data Section.
6. The pinion bearings should now be preloaded. The method for finding pre-load and torque will be found on page 8 of this section.

   Build the differential assembly, crown wheel and bearings into the housing as described below:—
7. If it is necessary to remove the carrier bearings from each side of the differential box, note and mark the thickness of shims fitted between the bearing and the box on each side.
8. Refit each set of shims to its correct side and press on the bearings.
9. Ensure that each bearing outer track is fitted to its correct side and fit the assembly into the casing.
10. Fit the bearing caps. Fit and tighten the nuts.
11. Check the backlash which now exists between the teeth of the crown wheel and pinion. This should be between ·005″ and ·010″ (·127 and ·229 mm.). The bearings should be lightly pre-loaded, in similar manner to the pinion bearings.
12. If the backlash is too little, remove the assembly and both carrier bearings. Then take one shim from the crown wheel side and transfer it to the opposite side. Shims of ·010″, ·005″ and ·003″ (·25, ·13 and ·08 mm.) are used. Shim for preload at the same time if necessary.
13. Refit bearings and differential assembly.
14. Paint the crown wheel teeth with marking compound and rotate the crown wheel whilst lightly loading the driver coupling to obtain an impression of the pinion teeth on the crown wheel teeth.
15. Correct markings are shown in Fig. 17 (upper illustration).
16. If the backlash is correct, incorrect marking denotes incorrect depth of pinion engagement.
17. This can be rectified by adding or removing shims next to the pinion head. Re-check marking and backlash until correct.
18. Withdraw the driver coupling and fit the pinion shaft oil seal. Smear oil seal with oil or grease. Refit coupling.

PARCO-LUBRISING OF CROWN WHEEL

The crown wheel receives a special wear-resisting finish in manufacture known as the Parco-Lubrising Process. Supplies which have been so treated will be found to have a slightly matt surface on the gear teeth.

It is **most important,** when taking crown wheels which have been treated by this process from stock to fit to vehicles in service, that care is exercised in the method used to remove the preservative.

Caustic soda or paraffin (kerosene) must not be used to remove the preservative—otherwise it is possible that the effect of the Parco-Lubrising may be wholly or partly nullified. Use only petrol (gas), trichlorethylene vapour, or carbon tetrachloride.

AXLE CASING BREATHER

The rear axle breather is situated in the position indicated in Fig. 16. The aperture should be cleaned out from time to time with a piece of wire as it is essential that it is not obstructed by paint, mud, or other matter.

Some models have the breather in a top stud of the banjo casing. This stud is identified by having a cap on the top.

REAR AXLE

To remove and refit

In the majority of cases it is quite unnecessary to remove the rear axle from the underframe, but in the event of this being necessary for any purpose the following procedure should be adopted.

Jack up rear of car so that the road wheels are clear of the ground and support the underframe on stands.

Remove road wheels.

Disconnect propeller shaft at rear driver coupling.

Remove rear shock absorbers.

Disconnect handbrake cable from each brake back plate lever.

Disconnect handbrake cable bracket from differential cover.

Disconnect rear brake hose at 3-way union on axle casing.

Protect brake hose from ingress of foreign matter, lift hose upwards and tie to prevent loss of fluid.

Remove all spring U-bolts.

Series V (Except Estate cars) Disconnect anti-roll bar link.

Withdraw axle from between springs.

Reassembly is a reversal of the above operations.

Bleed brakes (See Section K).

Note

The rear road springs are rubber-mounted, the rubber being interposed between the axle casing brackets and the road springs.

When refitting the axle to the road springs, the "U" bolts must not be overtightened as this will destroy the insulation effect of the rubber.

To obtain the correct tightness of the nuts, the use of a torsion wrench is strongly recommended.

The correct torque loading for the main "U" bolt nuts is given in the General Data Section.

If no torsion wrench is available use an ordinary 6" (150 mm.) spanner and tighten nuts until the rubber is compressed just showing signs of being "squeezed out" from the axle bracket and road spring; the pressure required is light; using the wrist only is sufficient.

For either of the above methods, the threads of the "U" bolts must be clean and the nuts reasonably free on the thread.

REAR SUSPENSION AND SHOCK ABSORBERS

SECTION H

CONTENTS

Page

REAR SUSPENSION

—General 2

REAR SPRING

—to remove 2
—to refit 2
—to dismantle 2
—examination 6
—to rebuild 6
—to check rear spring camber 7
—anti-roll bar 13

SHOCK ABSORBERS

—to remove 7
—servicing 7
—construction 7
—operation 8
—testing 9
—"Selectaride" 9

REAR SUSPENSION

GENERAL

The rear suspension is by means of two semi-elliptic springs which are secured to the axle case. Series V, except Estate Cars, incorporate an anti-roll bar.

Both spring eyes and the rear shackle bracket in the chassis are fitted with bushes of the steel and bonded rubber type.

The suspension is controlled by Armstrong Hydraulic shock absorbers which are of the direct double acting telescopic type. Some models are fitted with "Selectaride" shock absorbers.

No check straps are fitted but a bracket, which is welded to the chassis and located forward of the rear spring shackle, restricts the shackle movement at the full rebound position.

REAR SPRING—To remove and refit (Figs. 1, 2 and 3)

To remove

Jack up the car and support it by means of chassis stands or suitable blocks of wood placed under the chassis frame just forward of the front eyes of the springs.

Remove the road wheel on that side of the car from which the spring is to be removed.

Clean the projecting threads of the "U" bolts using a wire brush and oil with paraffin or penetrating oil.

Remove Nyloc nuts with washers from the "U" bolts. Series V—disconnect anti-roll bar link.

Jack up the rear axle until it is parted from the spring and support it with suitable blocks of wood.

Remove "U" bolts with clamp plate, clamp plate bushes (lower and upper) and clamp plate bush retainer.

Tap out the lower shackle bolt with shakeproof washer after removing nut, with washer, and lower rear end of spring to the floor.

Remove the front pivot bolt in a similar manner to the lower shackle pin.

The spring is now free to be taken away.

To refit

Refitting is a direct reversal of the above operations, but it is extremely important to assemble the spring so that the short end measured from the dowel bolt, is facing to the front.

When finally tightening the spring "U" bolts, shackle bolts and pivot bolt, the car must be raised until the underside of the chassis immediately to the rear of the bump rubber is 5·9″ (15 cm.) above the top of the axle casing.

The simplest way to achieve this is to obtain two suitable strips of wood 5·9″ long and to raise the chassis until these pieces of wood can be placed on the top of the axle and then to lower the chassis until the wood is nipped.

One end of each piece should be suitably rounded to conform to the contour of the chassis frame.

The original Nyloc nuts may be used again *providing the nuts cannot be screwed on to the "U" bolts by hand.*

These nuts should be tightened to the figure given in General Data Section.

To dismantle

Remove spring (see preceding instructions).

Before dismantling mark one end of each leaf with a centre punch. This ensures that the leaves are replaced in the position they occupied prior to dismantling.

Remove the four clips. To do this, first remove the bolts and carefully open out each clip sufficient to enable the clip to be removed from the spring.

Do not damage or lose the rubber packing.

Grip the spring securely in a vice, holding it by the bottom and top leaves.

Unscrew dowel bolt nut.

Remove the dowel bolt.

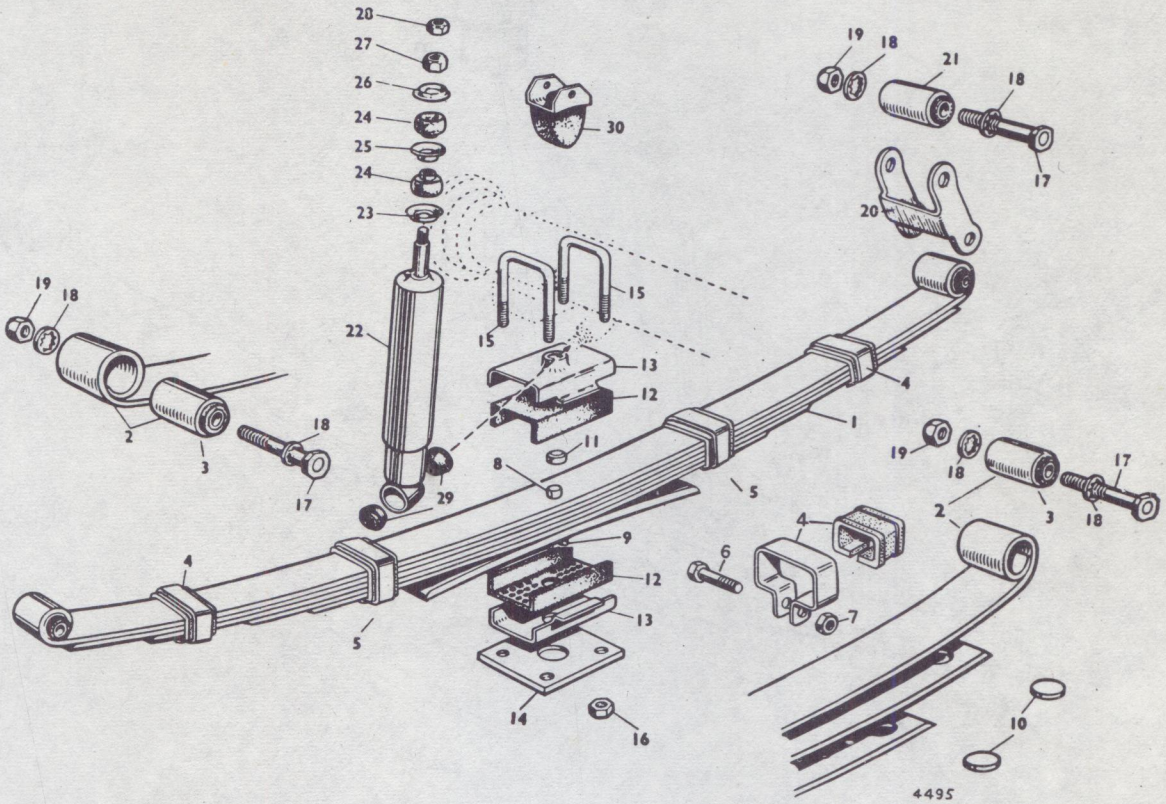

Fig. 1. *Exploded view of rear suspension and shock absorbers (Series I and II)*

1. REAR SPRING
2. MAIN LEAF
3. BUSH, SPRING EYE
   CLIP, No. 3 LEAF WITH LINER
5. CLIP, No. 6 LEAF WITH LINER
6. BOLT
7. NUT
8. DOWEL BOLT
9. NUT
10. THRUST BUTTON
11. SLEEVE
12. CLAMP PLATE BUSH
13. CLAMP PLATE BUSH RETAINER
14. CLAMP PLATE
15. "U" BOLT
16. LOCKNUT
17. BOLT, SPRING EYE
18. WASHER
19. NUT
20. SHACKLE
21. BUSH
22. SHOCK ABSORBER
23. WASHER, INNER
24. BUSH, INNER AND OUTER
25. SPIGOTTED WASHER
26. WASHER, OUTER
27. NUT
28. LOCKNUT
29. BUSH, LOWER
30. BUMP RUBBER

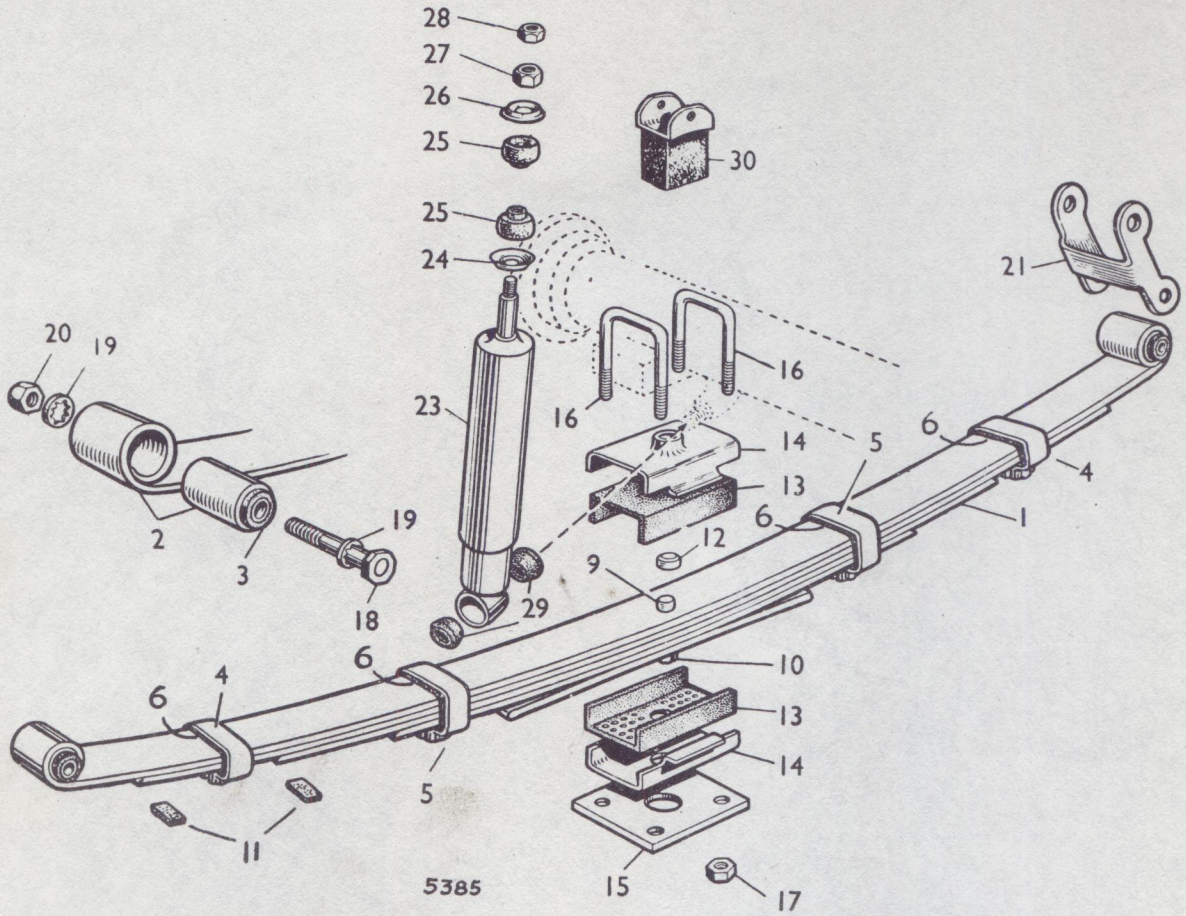

Fig. 2. *Exploded view of rear suspension and shock absorbers (Series III)*

1. REAR SPRING
2. MAIN LEAF
3. BUSH, SPRING EYE
4. CLIP, No. 3 LEAF
5. CLIP, No. 5 LEAF
6. RUBBER LINER
9. DOWEL BOLT
10. NUT
11. THRUST BUTTON
12. SLEEVE
13. INSULATOR RUBBER
14. INSULATOR RETAINER
15. CLAMP PLATE
16. "U" BOLT
17. LOCKNUT
18. BOLT
19. WASHER
20. NUT
21. SHACKLE
23. SHOCK ABSORBER
24. WASHER, INNER
25. RUBBER BUSH, INNER & OUTER
26. WASHER; OUTER
27. NUT
28. LOCKNUT
29. RUBBER BUSH, LOWER
30. BUMP RUBBER

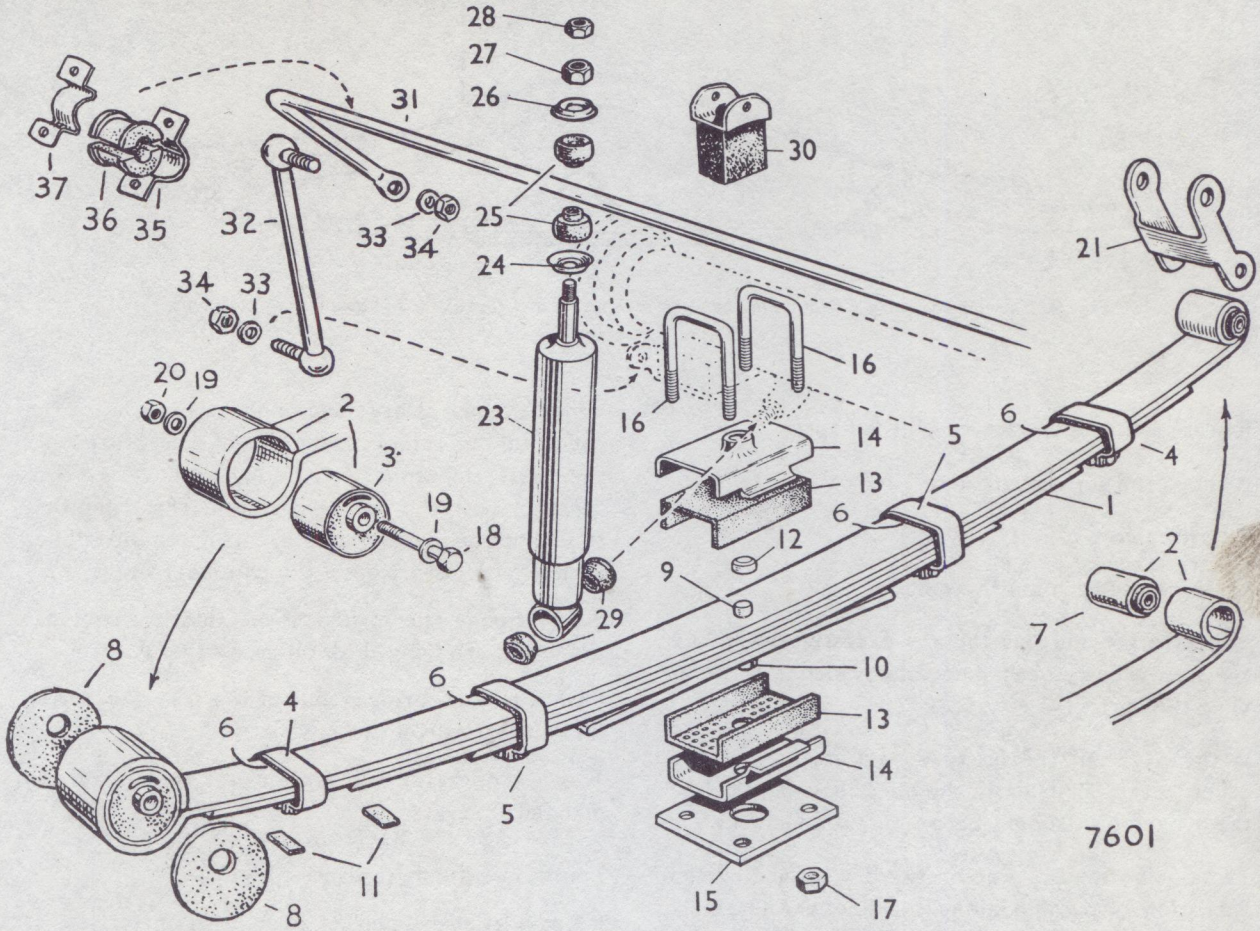

Fig. 3. *Exploded view of rear suspension and shock absorbers (Series IV) (Series V—see note below)*

1. REAR SPRING
2. MAIN LEAF
3. BUSH, SPRING EYE (FRONT)
4. CLIP, No. 3 LEAF
5. CLIP, No. 5 LEAF
6. RUBBER LINER
7. BUSH, SPRING EYE (REAR)
8. RUBBER WASHER
9. DOWEL BOLT
10. NUT
11. BUTTON
12. SLEEVE
13. INSULATOR RUBBER
14. INSULATOR RETAINER
15. CLAMP PLATE
16. "U" BOLT
17. LOCKNUT
18. BOLT
19. WASHER
20. NUT
21. SHACKLE
23. SHOCK ABSORBER
24. WASHER, INNER
25. RUBBER BUSH, INNER AND OUTER
26. WASHER, OUTER
27. NUT
28. LOCKNUT
29. RUBBER BUSH, LOWER
30. BUMP RUBBER
31. ANTI-ROLL BAR (SERIES V)
32. LINK
33. WASHER
34. NUT
35. RETAINING CLAMP
36. RUBBER BUSH
37. INNER CLAMP

Note: *Anti-roll bar fitted to Series V models, except Estate Cars*
Humber Imperial fitted with "Selectaride" shock absorbers

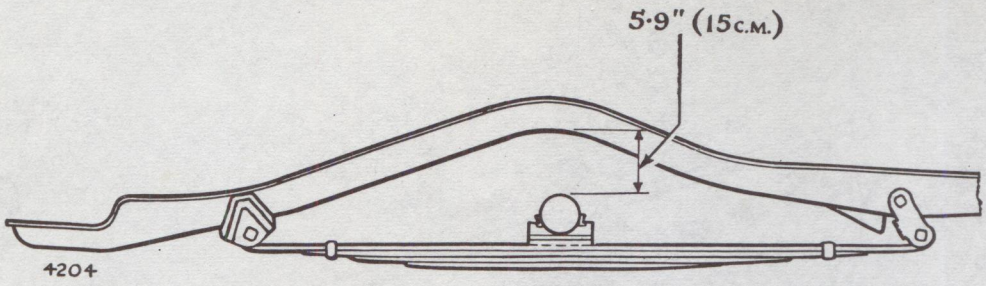

Fig. 4. *Showing the correct relationship between rear spring and chassis for tightening the shackle pins*

Release vice and the leaves will fall apart.

Remove the thrust buttons.

Examination·

Clean off the spring using paraffin.

Check thrust buttons for any excessive wear and replace with new ones, if necessary, before reassembling the spring.

In the event of the fracture of a spring leaf, the other leaves, particularly the ones above and below the broken leaf, should be examined for cracks.

These will often show up on the dry surface by the exudation of paraffin along the line of the crack. Any faulty leaves should be replaced.

The "setting up" of spring leaves is not recommended and in the case of a weak spring a new or factory reconditioned assembly should be fitted.

To rebuild

Before rebuilding the spring the leaves should be lubricated with graphite grease.

Rebuilding is a reversal of the dismantling instructions, but alignment of the leaves will be greatly facilitated if a length of steel rod of suitable diameter is inserted through the dowel bolt hole, otherwise damage to the threads of the dowel bolt may occur.

When the leaves have been fully pressed home the rod should be removed, the dowel bolt refitted and the nut tightened. Carefully refit the clips together with the rubber packing. The clamp bolt should not be over-tightened, damage to the rubber packing and distortion of the clip may result.

Before fitting the spring to the chassis, check that the leaves are lying flush on each other.

Bushes may be pressed out of the frame or spring for renewal purposes.

The use of a suitable withdrawal tool is recommended.

Front eye bush (eccentric type)

If a new front eye bush is fitted it is imperative that it is pressed in so that the pivot location is at the top of the spring eye.

A tolerance of $\pm\frac{1}{32}$ in. (·8 mm.) must not be exceeded. To ensure that this is maintained, the

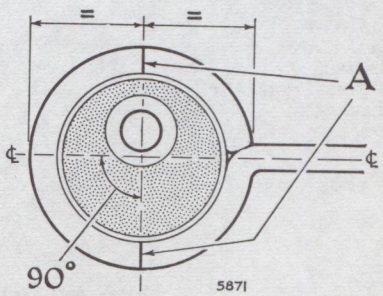

Fig. 5. *Method of marking spring eye*

spring should be scribed as shown at (A) in Fig. 5 before fitting.

To check rear spring camber

Spring camber is the difference in height between the top of the main leaf and a line drawn through the centre of the spring eyes.

As will be appreciated this varies according to the weight carried in the vehicle.

In order to check the rear spring laden camber LOAD THE VEHICLE BY PLACING WEIGHTS TO THE VALUE SHOWN IN GENERAL DATA UNDER "REAR SUSPENSION".

Stretch a length of thread between the spring eye centres and measure the distance between the top of the main leaf and the thread.

Positive camber means that the line of the thread will be ABOVE the main leaf of the spring. Reverse or negative camber means that the line of the thread will be BELOW the main leaf.

For correct spring camber see "General Data"

SHOCK ABSORBERS

Armstrong Direct-Acting Telescopic Dampers are fitted.

The body of the shock absorber is telescopic and is mounted almost vertically from the rear axle to the body. It is therefore direct-acting, no links or levers being required.

To remove

Remove the locknut, nut and washer with rubber bush from the upper end of the shock absorber. The nuts with washer and rubber bush are accessible from inside the boot.

It will be noted that the stem of the absorber has been milled square to facilitate removal of the nuts.

Remove the locknut, nut and washer securing the lower end of the shock absorber to the axle casing.

Grip the dust shield and pull the absorber downward until the upper attachment is clear of the body and remove it from the car complete with inner washer.

Refit in the reverse order of the above.

Tighten the fixing nuts fully and then tighten the locknuts.

Servicing

Unless proper facilities are available including a shock absorber testing machine, it is almost invariably found that to attempt repairs to the modern telescopic shock absorbers is neither practical nor economical.

These units are completely sealed; no topping up, adjustment, or other service is required apart from periodical checks of mountings and rubber bushes, which can be carried out without the aid of special tools.

In the event of any shock absorbers requiring attention, it is strongly recommended that the faulty unit should be removed and a replacement shock absorber fitted.

Removal and refitting instructions for front shock absorbers are contained in Section F.

Construction (AT. Type).

The assembly consists mainly of a piston rod (C) attached to the upper mounting (A) with a piston incorporating the piston valve (M) attached to the lower end. This is housed in a cylinder (H and P)

with a larger diameter concentric to form a reservoir (Q) and a lower mounting (S). In detail the piston rod has a former and dust shield (B) attached immediately below the upper mounting stem, and is suitably machined at the lower end with the piston to house the piston valve (M). The cylinder is located at the lower end by a spigot on the piston rod guide which in turn is housed in the outer tube.

This piston rod guide forms a bearing for the piston rod, holds the rebound valve and drain tubes in position and contains the spring-loaded piston rod seal (D). The cylinder, piston rod guide and reservoir seal are retained in the outer tube. Baffles (K and N) are sprung on to the outside of the cylinder (P) to prevent aeration of the fluid in the reservoir (Q) by the rapid movements of the suspension.

The cylinder is completely filled and the reservoir about half-filled with fluid when the piston rod is extended.

Operation

The functioning of the shock absorber with its unique principle of "one-way" oil circulation, is described below with references to the illustration.

As the wheel rises on fast bump strokes, when the piston is moving relatively towards the base valve (R) fluid pressure opens the piston valve (M) against the coil spring load and fluid passes through the ports in the piston valve (M) from the lower half of the cylinder (P) to the upper part of the cylinder (H). The excess fluid displaced from the cylinder by the piston passes via the ports (F) in the piston rod guide (E) through the filter (G) and down the rebound valve tube (L) opening the rebound valve (O) against the coil spring load into the reservoir (Q).

On the slow bump strokes, damping is controlled by calibrated bleed grooves on the face of the base valve (R).

On the fast rebound strokes when the piston is moving relatively towards the piston rod guide (E) the piston valve (M) closes and again fluid passes through the ports (F) in the piston rod guide (E) through the filter (G) down the rebound valve tube (L) opening the rebound valve (N) against the

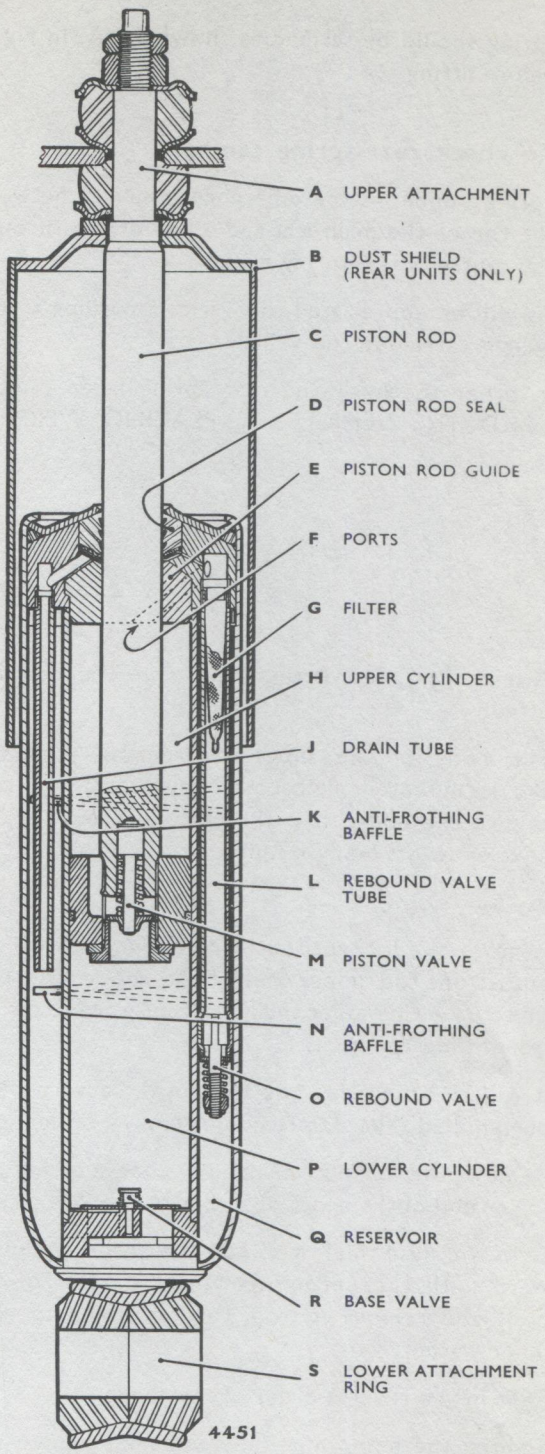

Fig. 6. *Constructional details of shock absorber*

coil spring load and into the reservoir (Q). At the same time the lower part of the cylinder (P) is replenished with fluid as the base valve (R) opens to allow recuperation from the reservoir (Q).

On slow rebound strokes, fluid passes through a calibrated bleed groove in the face of the piston valve seat.

Any fluid which passes between the piston rod and the piston rod guide bearing is prevented from escaping by the multi-lip piston rod seal (D).

Undue internal fluid pressure on this seal is relieved as the fluid passes through a port to the drain tube (J), the lower end of which is immersed in the reservoir fluid to prevent aeration.

Testing

When there is any question of suspension not being adequately damped, the condition of the following should be considered: road springs, tyre pressures, bump rubbers and bump rubber seats, as these carry the full bump load of the suspension. If a shock absorber does not appear to function satisfactorily an indication of its resistance can be obtained by carrying out the following check:—

Remove the shock absorber from its mounting,

Place the shock absorber vertically in a vice. holding by the lower spindle between two pieces of wood.

Grip the dirt shield firmly with the hands and prime the shock absorber by working it up and down several times to expel the air.

Move the piston (free top half) up and down through one complete cycle to check the nature of the movement.

Moderate and even resistance throughout the outward and inward strokes should be felt. If however, the resistance is slight, erratic, or free movement cannot be eliminated by priming, then the shock absorber should be changed.

As only the "bleed" incorporated in the valves can be felt when operating the shock absorber manually even when new, no amount of hand testing will provide a true indication of the resistance of the shock absorbers at speeds obtained on bumpy roads. It will, therefore, be appreciated that a new shock absorber may appear to be weak when operated by hand, but this should not be taken as evidence of a fault. Air will bleed into the working parts of a shock absorber when not in use, particularly if it is stored in any position other than vertical, and this air must be expelled before the shock absorber is tested.

ARMSTRONG "SELECTARIDE" Electrically Adjustable Shock Absorbers

Description

The "Selectaride" Shock Absorber provides a means whereby the degree of damping may be immediately varied to suit particular requirements.

"Selectaride" Shock Absorbers are especially useful as changes in riding characteristics, due to variations in road and load conditions, can be accommodated either by increasing or decreasing the damper settings. A facia switch enables the best degree of damping to be selected from four positions.

Caravan and boat towing, heavy or delicate load carrying, especially arduous conditions, general fast driving, and slow speed ride, etc., are considered in establishing the four "Selectaride" settings which are chosen to suit the particular application.

Operation

The setting required is selected by rotating the switch in a clockwise direction, from "soft" for town pottering, in progressive stages up to "4" which is the hardest setting, for high speed driving, heavy loading, towing, etc.

The selector switch must never be forced against the direction of rotation as marked on the dial.

Whichever setting is selected, both bump and rebound are altered to suit.

Response is instantaneous, and there is no continuous drain on the battery.

Control between the switch and shock absorber is by a simple electrical cable.

Faulty units may be replaced by disconnecting the cable at the junction plug.

Disconnect the shock absorber from the top and bottom mounting points, and remove.

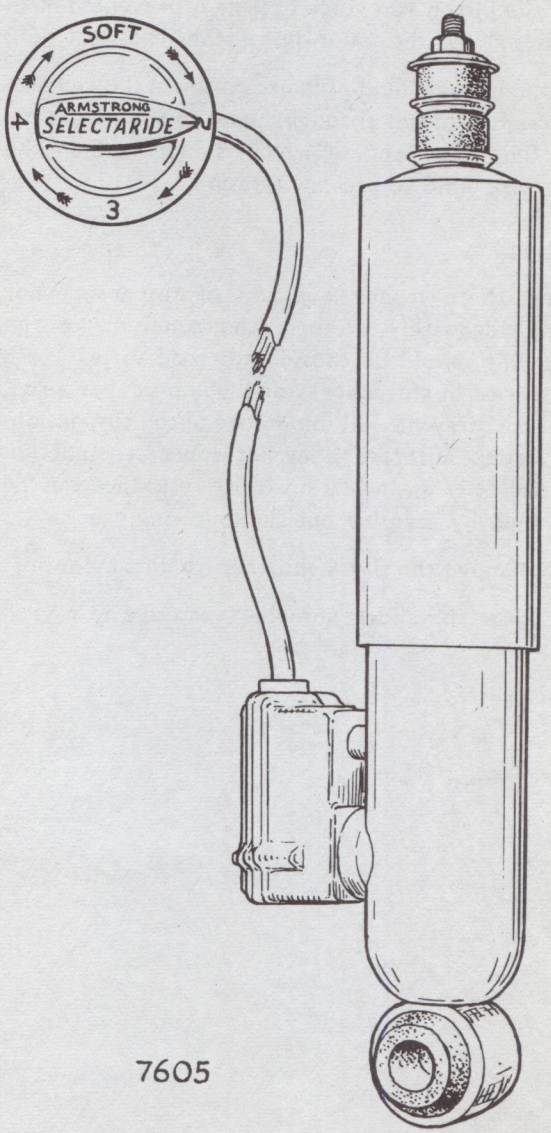

Fig. 7. *Armstrong "Selectaride" shock absorber*

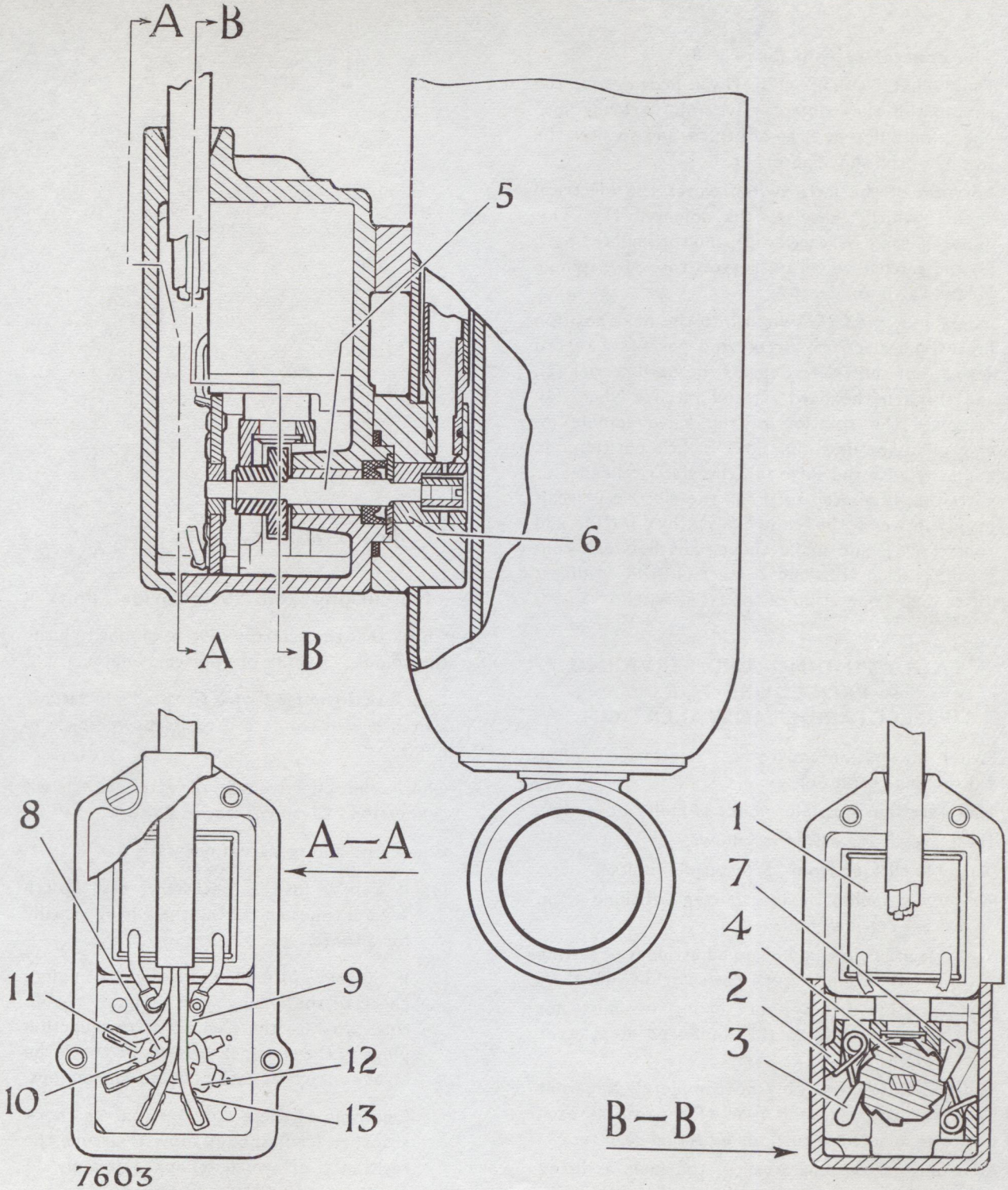

Fig. 8. *Sectional view of operating mechanism*

The control system (See Fig. 8)

The "SELECTARIDE" CONTROL provides for the rotation of the control valve (6), to bring into operation different sizes of orifice, and so alter the setting of the shock absorber.

Rotation of the facia switch closes the electrical circuit, which energises the solenoid (1). This draws up the pawl carrier (2), and through the pawl (3) and ratchet wheel (4) rotates the valve spindle (5) and valve (6).

Indexing of the facia switch into the next position breaks the electrical circuit and permits a return spring (not shown) to depress the pawl carrier (2), and through the pawl (7) and ratchet wheel (4), complete the rotation of the valve spindle (5) and valve (6) into the next orifice position. In company with the valve (6), the electrical repeater switch (8) is rotated to break the electrical circuit made between the contact (9), blade (10), and contact (11), and make the circuit between contact (9), blade (12), and contact (13), in readiness for the next operation of the facia switch.

FAULT FINDING AND SERVICING PROCEDURE FOR "SELECTARIDE" INSTALLATION

Switch on ignition and rotate "Selectaride" switch at least one revolution.

There are four possible modes of faulty operation. These are characterised as follows:—

(A) No clicking from "Selectaride" units.

(B) Only feeble or intermittent clicking from "Selectaride" units.

(C) Healthy clicking but no adjustment of setting in either one or both "Selectaride" units.

(D) Healthy clicking but setting in units not corresponding to that indicated at selector switch.

Faults C and D will only be completely apparent by either bouncing the rear of the car as each setting is selected in turn, or by actual road test.

According to the character of the fault as listed above, proceed as under:—

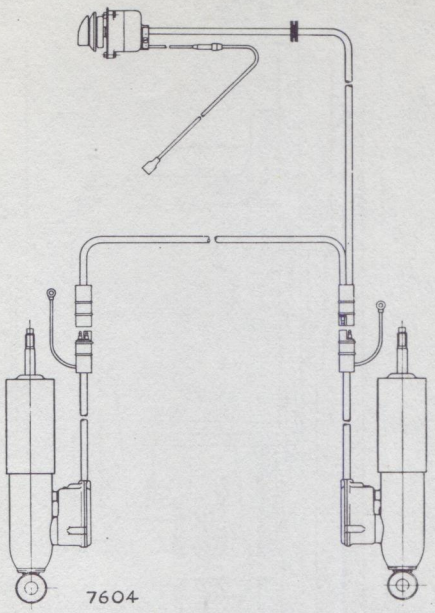

Fig. 9. *General layout of the system*

(A) No clicking from "Selectaride" units

1. Check that the selector switch knob is tight on the spindle. Rectify or replace as necessary.
2. Check that the feed wire to the "Selectaride" switch is still connected to its power pick-up point.
3. Check the effectiveness of earth to chassis connection. Clean contact to be sure.
4. Check fuse and replace if necessary.

   (*a*) If a new fuse is necessary, test switch several times and check the wiring visually for a short.

   (*b*) If the new fuse blows, make a complete check of the wiring with a meter. To do this, separate the harness at the junction plugs to the shock absorbers and check the eight contacts at each of these connections.

   One only of these contacts (on the shock absorber lead) should show a circuit, the resistance of which is approximately $1\frac{1}{2}$ ohms.

(i) If a short is discovered in a shock absorber lead, open the housing on the shock absorber side and replace shock absorber lead, solenoid and repeater switch assembly.

(ii) If the short is discovered in the main harness, replace the main harness **or** selector switch assembly.

There is a junction plug between the main harness and selector switch enabling these components to be replaced independently. A meter check should be carried out at this plug to determine which component is at fault.

(B) Only feeble or intermittent clicking from "Selectaride" units

1. Check operation with engine running and dynamo charging. Ensure that at least 11 volts are available.
2. Check that the feed wire to the selector switch is securely connected to its power pick-up points.
3. Check effectiveness of earth to chassis connections. Clean to be sure.
4. Establish which units are faulty by removing the earth to each unit in turn and operating the selector switch.
5. Open the housing on the side of the faulty unit. Remove cable, solenoid and repeater switch assembly. Check valve spindle for free rotation.
   (*a*) If valve spindle seized, replace complete "Selectaride" shock absorber.
   (*b*) If valve spindle free, fit new cable, solenoid and repeater switch assembly. If unit remains faulty, fit new harness **or** selector switch. There is a junction plug between the main harness and selector switch enabling these components to be replaced independently. The harness should be replaced before fitting a new switch.

(C) Healthy clicking but no adjustment of setting in either one or both "Selectaride" units

Replace the faulty unit.

(D) Healthy clicking but setting in units not corresponding to that indicated by selector switch

Check that the selector switch knob has not been forced against its indicated direction of rotation and thereby made to take up an incorrect relationship with the flat on the spindle of the selector switch. The knob retaining screw should be engaged with the spindle flat. Rectify positioning, or fit new knob if the original is damaged.

Any queries on "Selectaride" Shock Absorbers should be addressed to:—

Armstrong Patents Co. Ltd.
Eastgate
Beverley
Yorkshire.

Anti-roll bar

Series V cars (except Estate cars) are fitted with an anti-roll bar to the rear suspension.

The anti-roll bar is attached to the underside of the rear seat pan by two clamps containing rubber inserts.

Connection to the rear axle is by means of two links, rubber bushed at both ends.

To remove anti-roll bar

Disconnect the two links from the axle casing.

Remove the two retaining clamps holding the anti-roll bar to the seat pan, taking care not to lose the split bushes in the clamps.

Remove the anti-roll bar complete with links.

Alternatively, the links may be detached from the anti-roll bar by removing the nut and washer from the top joint of the link and withdrawing the stud from the eye in the bar.

To refit anti-roll bar.

This is the reverse procedure of the operations given above.

Should there be complaints at any time of the retaining bushes squeaking, they should be dismantled, and lightly lubricated with a lithium-based grease.

STEERING

CONTENTS

Page

DIRECTION INDICATOR SWITCH—To remove and refit 3

HORN RING, COVER AND MOTIF ASSEMBLY—To remove and refit 3

STEERING COLUMN COWL—To remove and refit 5

STEERING WHEEL—To remove and refit 6

STEERING UNIT—Description 2
—To remove and refit 8
—To dismantle 9
—To reassemble 9
—F.3 type 10a

STEERING LINKAGE—Description 6

DROP ARM—To remove and refit 6

IDLER LEVER—Description 6
—To remove and refit 7

IDLER LEVER BRACKET—To renew bushes 7

TRACK RODS—To remove and refit ... ... 7—8

FRONT WHEEL TOE-IN—To check ... ... (See Section F)

STEERING ARMS—To remove and refit 8

STEERING BOX—To pre-load 10

POWER-ASSISTED STEERING
—Description—Power cylinder operating principles 11
—Pump assembly ... ... 15 and 17
—Maintenance—Oil reservoir level and filter 18
—Adjustments—Driving belt and steering box stops 18
—Overhaul—Draining and filling system 19
—Power cylinder 19
—Pump assembly ... ... 25 and 29
—Testing pump output pressure 29
—Fault-finding 32
—Series V models onwards 35

STEERING

STEERING UNIT

Description

Burman "F" type steering is fitted. This is a high efficiency recirculating ball type unit, incorporating a single start worm shaft and half or full nut. The latter operates a rocker shaft (cam lever) the upper half of which rotates in the light alloy steering box. The lower half rotates in a renewable bush. Both rocker shaft and steering column are adjustable for end float and are preloaded.

Burman "IV" type steering is fitted to Series IV cars. Details will be found on page 10A.

The steering box is attached to the main side frame member at four points. Variable ratio steering is employed, providing a progressive reduction in turning effort from the straight ahead to the full lock position. This facilitates manœuvering in a

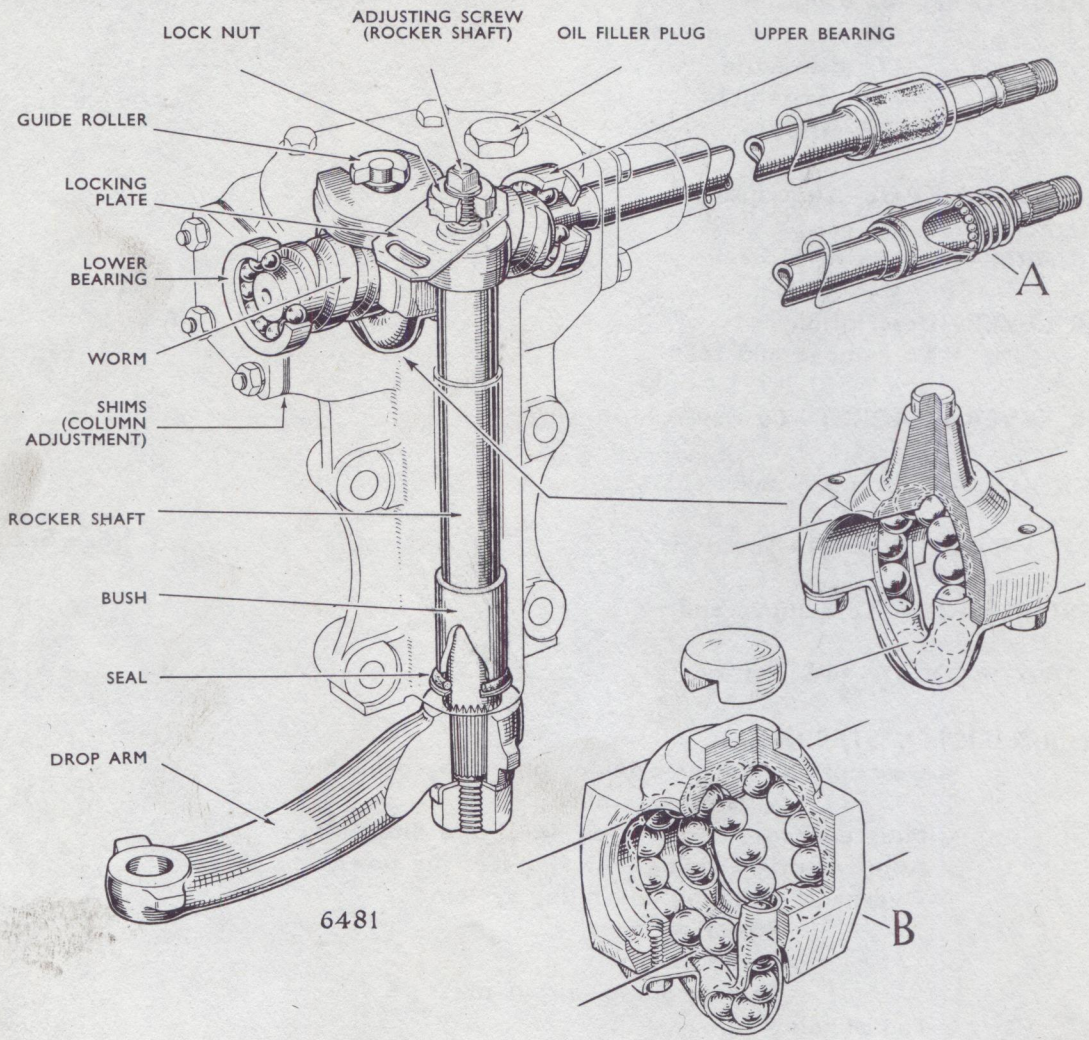

Fig. 1. *Sectional view of the Burman Steering Unit. A. Early top column bearings B. The full nut unit of the F3 type steering unit*

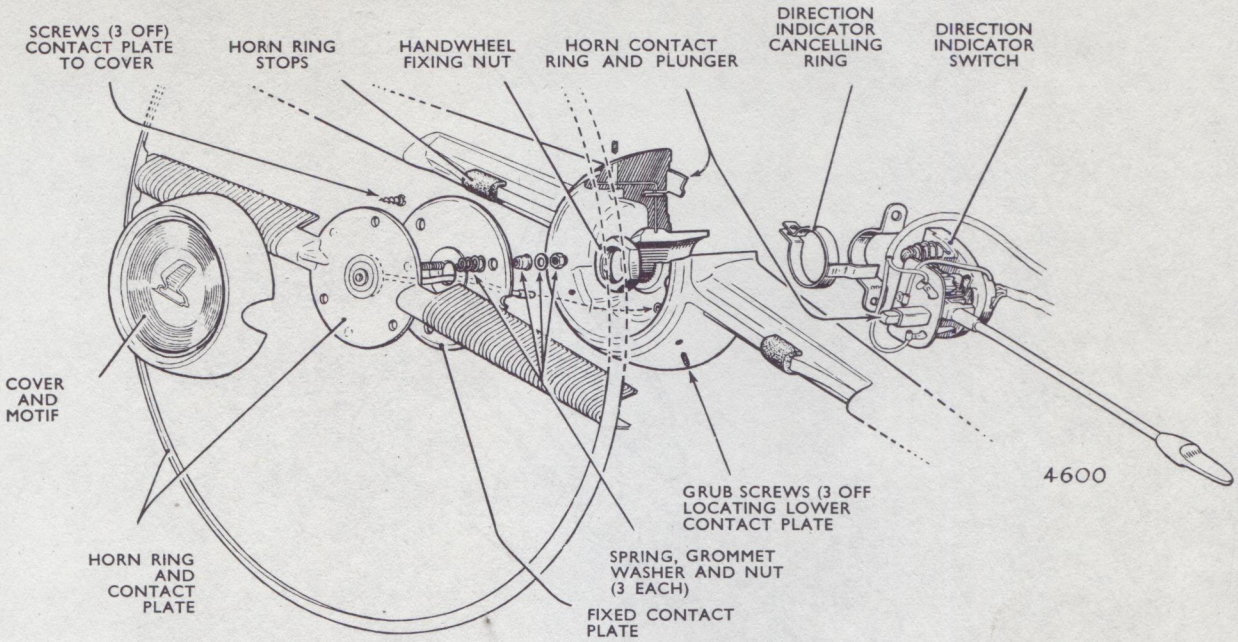

Fig. 2. *Steering column electrical controls (Exploded view)*

confined space, while retaining the accuracy necessary at high speed on the open road.

Power-assisted steering is available as an optional extra.

DIRECTION INDICATOR SWITCH

Description (Fig. 2)

The switch for the flashing direction indicators is secured to the steering column by a clip, and locates on a raised key in the outer column tube immediately below the steering wheel hub.

A cancelling ring clamps around the lower end of the steering wheel hub and operates a trip mechanism in the flasher switch to afford cancellation when the steering wheel is returned to the straight ahead position. For wiring details see Section "N".

To remove Switch

1. Disconnect battery.
2. Remove column cowl (described on Page 5).
3. Remove clamping screws securing switch to steering column.
4. Disconnect wiring at six snap connectors under facia panel near steering column to release switch.

To refit Switch

1. Locate switch on column keyway, set it axially so that striker ring fully engages switch pawls, but does not foul switch casing, and secure it with the clamping screws. This ensures that the switch is correctly positioned. (See also Steering Wheel—To refit.)
2. Reconnect wiring at six snap connectors.
3. Refit column cowl.
4. Reconnect battery.

HORN RING, COVER AND MOTIF ASSEMBLY

Description (Fig. 2)

The horn ring consists of a circular central plate with two spokes, to which the outer ring is secured by two screws.

This assembly is in turn secured, with the upper and lower horn contact plates, to the underside of the centre cover by three screws. The upper and lower horn contact plates are held apart by three light springs, the upper (moving) plate being insulated and the lower (fixed) plate being earthed.

The whole unit is retained in the hollow centre of the steering wheel boss by three pointed grub-screws clamping on to the horn switch lower contact plate. An external wire running by the steering column, inside the cowling, is attached to

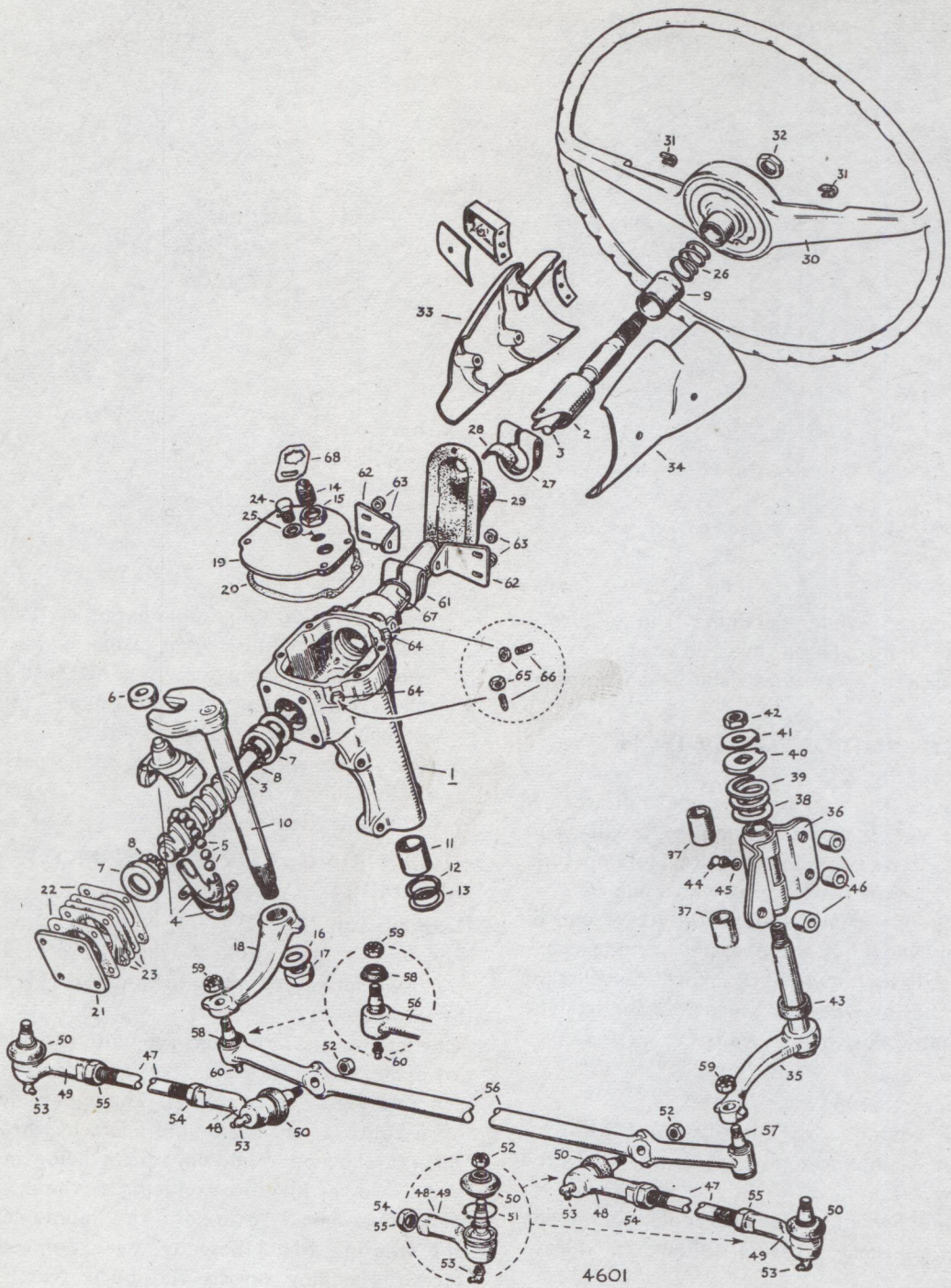

Fig. 3 *Steering column, cowl and linkage (exploded view)*

an insulated terminal on the flashing direction indicator switch body, feeding a spring loaded plunger which is in contact with a slip ring recessed into the lower face of the steering wheel centre boss. From this slip ring a wire with a snap connector feeds the upper contact of the horn switch, the lower side being earthed through the horn switch lower contact plate and three grubscrews to the steering column, via the splined centre of the steering wheel boss.

HORN RING ASSEMBLY

To remove and refit

1. Slacken three grubscrews recessed into, and equally spaced around the steering wheel boss.
2. Lift up horn ring assembly, withdraw snap connector from its socket inside steering wheel boss and then remove the assembly.

Reverse this procedure for refitting, ensuring that the base plate of the horn ring assembly is correctly and securely located over the key inside the wheel boss.

STEERING COLUMN COWL

Description

The plastic cowling is made in two halves, and is split vertically when viewed down the column. It encloses the column gearshift linkage and direction indicator switch mechanism, and is secured at the top by two screws into the gear lever upper bracket, and clamped together at the bottom by a single screw.

To remove and refit

1. Remove one clamping screw at lower fixing
2. Remove one screw each side at upper fixing

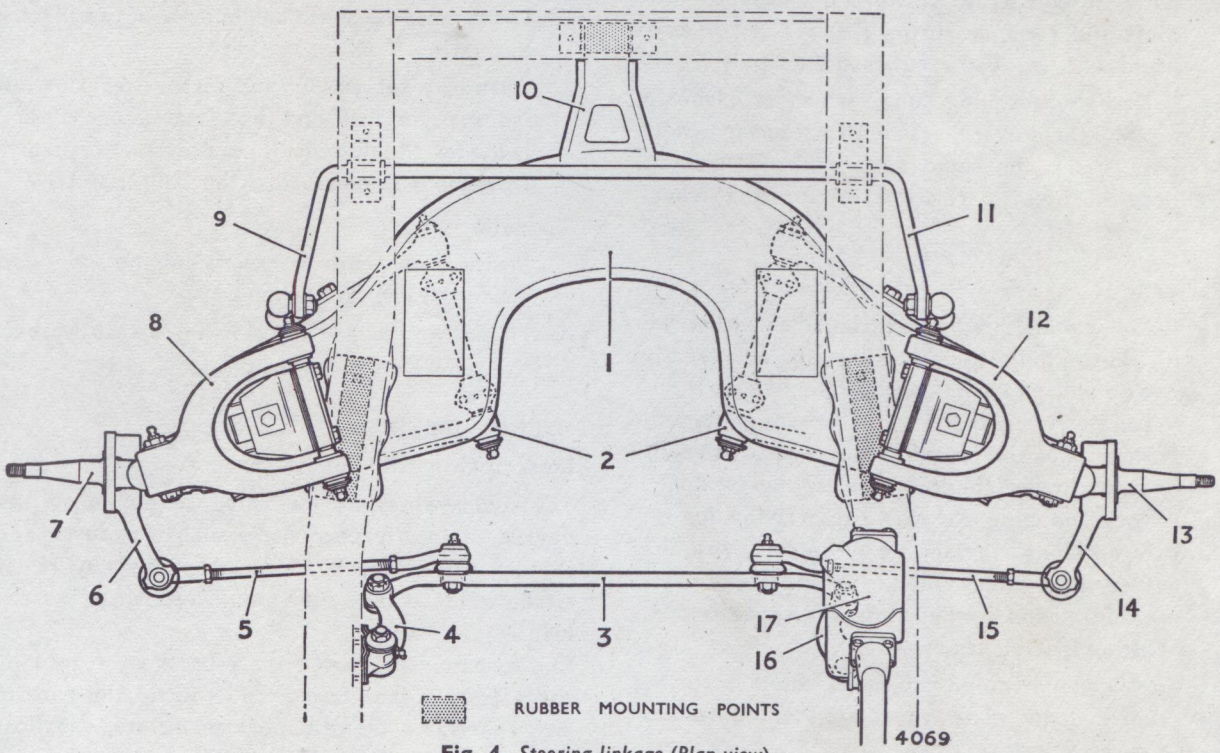

Fig. 4. *Steering linkage (Plan view)*

1. Cross Member
2. Lower link
3. Centre track rod
4. Idler lever
5, 15. Outer track rod
6, 14. Steering arm
7, 13. Stub axle
8, 12. Upper link
9, 11. Anti-roll bar
10. Cross member support extension
16. Drop arm (swing lever)
17. Steering box

3. Part assembly, easing one side over the flasher switch.

When refitting, take care to ensure that both halves fit correctly together before tightening screws, and that the flasher switch aperture clears the switch lever. Check this with the switch side of the cowl fitted, and the other side removed, to give access for switch adjustment.

STEERING WHEEL

To remove

1. Remove horn ring assembly as previously described.
2. Undo centre securing nut.
3. Mark position of steering wheel boss on splines, if existing wheel is to be fitted.
4. Draw off wheel, using Churchill special tool. Note the retainer spring (26, Fig. 3) on cars fitted with top ball race assemblies only.
5. If flasher cancelling ring, which is clamped around the lower part of the steering wheel boss, has to be removed, mark and note its position first in relation to steering wheel spokes.

To refit

1. If a new wheel has to be fitted, ensure that the lug on the indicator cancelling ring is correctly positioned as follows:—
   With the front wheels in the straight ahead position and the steering wheel located to fit on the correct spline (wheel spokes at three o'clock and nine o'clock), the striking lug on the cancelling ring should be in line with the axis of the flasher switch. If the original parts are refitted and marked as previously described, refitting is straightforward.
2. Fit the upper column bearing retainer spring (26, Fig 3) and place wheel over column splines in correct position.
3. Refit and tighten nut.
4. See that striker ring engages flasher switch (see Page 3—to refit switch).
5. Refit horn ring assembly.

STEERING LINKAGE

Description (Fig. 4)

The steering drop arm (swing lever) and idler lever are interconnected by a forged steel centre track rod, pivoted at a ball joint on the drop arm and a Silentbloc bush joint on the idler lever.

Located symmetrically inwards of the drop arm and idler lever joints on each side in this track rod is a boss machined to take the inner ball joint of each outer track rod, the ball pins of these joints being located approximately parallel to the ground, with the ball joints facing forward. Each outer track rod is connected to its steering arm by a vertical ball joint. For adjustment, see Section "F".

DROP ARM (SWING LEVER)

To remove

1. Disconnect drop arm ball joint, using a ball joint extractor.
2. Turn back tab washer and remove securing nut from rocker shaft end (note marks on shaft and lever for spline location) and extract drop arm from taper splines, using Churchill tool RG.132.

To refit

1. Position drop arm correctly on the splines so that markings correspond.
2. Fit tab washer and nut, locking up tab washer.
3. Reconnect drop arm ball joint.

IDLER LEVER

Description (Fig. 5)

The idler lever is pressed on to its spindle and the degree of interference fit is such that lever and spindle are serviced as an assembly. A safety circlip is fitted into the spindle groove below the lever.

The assembly is carried on a bracket secured by three bolts to the frame, and the spindle runs in two renewable Oilite superload bushes, end float being controlled by a thrust washer and special spring.

Packing collars are fitted between the bracket and side member to ensure correct relationship between drop arm (swing lever) and idler lever.

IDLER LEVER

To remove

1. Disconnect Silentbloc bush peg from idler lever end, using an extractor.
2. Remove three bolts securing idler lever bracket to underframe side member, noting the position of packing collars fitted (bracket to frame).

To dismantle

1. Release lockwasher and remove nut at the top of the pin.
2. The lever and pin can now be removed from the bracket.
3. Note positions of plain, double coil spring and packing washers.

To reassemble

1. Ensure that lever arm is a tight fit on its spindle and that circlip is in place.

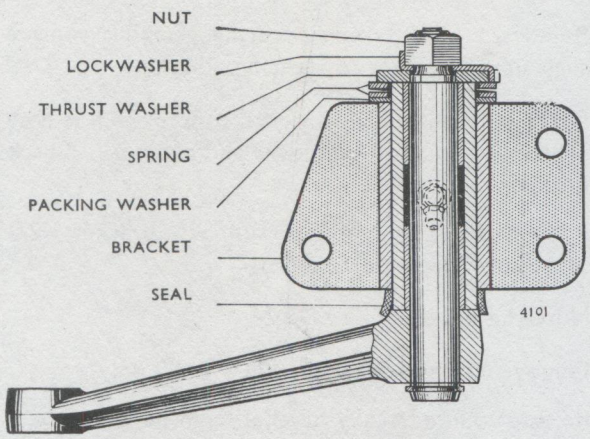

Fig. 5. *Idler lever details*

2. Fit seal on to shaft immediately above lever and insert spindle into bracket (two holes in bracket nearest lever end). Locate seal as shown in Fig. 5.
3. Fit packing washer and spring washer over the upper end of the bracket tube, and then fit thrust washer, lockwasher and nut.
4. Tighten nut fully and turn up lockwasher.

To refit

1. Refit bracket and assemble to side member, using the packing collars in the same positions as noted on removal.
2. Refit Silentbloc bush to idler lever end, *with the steering in the straight ahead position.* If this is done with the wheels on lock, stresses will be set up in the bush.

IDLER LEVER BRACKET

To renew bushes

1. Dismantle as previously described.
2. Make a sawcut in each old bush to collapse bushes, taking care not to damage the bore of the bracket tube.
3. Drive each bush outwards.
4. Make up a stepped drift with smaller spigot diameter 0·69″ (17·53 mm.) (smooth finish) and shank length equal to bush length.
   The larger diameter must exceed the bush outside diameter.
   Using drift, press in bushes from each end of bracket tube, ensuring that the end face of each bush is flush with the tube end faces when fitted.
   No reaming, broaching or honing are required, provided that the drift is accurately made to the dimensions quoted.
7. Check this by inserting a new idler lever spindle through the bushed assembly.

OUTER TRACK RODS

Removal and refitting

Extractor lugs are provided on the centre track rod and on the steering arms. Screw type extractors should be used whenever possible.

When refitting the track rods, ensure that the ball socket assemblies on the steering arms and drop arm (swing lever) are located with each ball peg in its central position, with the weight of the car on the front suspension. This will avoid "necking" of the socket assemblies with track rod and suspension movement.

Flats are provided on the socket housings, in order that they may be held with a spanner whilst the track rod concerned is being rotated for adjustment or refitting.

After refitting outer track rods check "toe-in" (see Section "F").

CENTRE TRACK ROD

To remove

1. Extract the inner ball peg of each outer track rod from its location in the centre track rod—lugs are provided on centre track rod for extraction.
2. Extract drop arm (swing lever) ball joint and idler lever Silentbloc swivel joint.

   Remove track rod.

To refit

As the centre track rod end joint housings are integral with the rod, ball joint alignment is automatic. Check this, however, when re-connecting outer track rods.

Tighten Silentbloc joint on idler lever end with steering in the straight ahead position.

STEERING ARMS

Each Steering arm is secured to its stub axle by the two bolts and nuts which also locate the brake back plate and front hub oil catcher.

One of these bolt heads faces the centre of the car (outside the brake assembly) and the nuts are inside the brake assembly. Lock stop adjustment is carried out by shimming beneath the head of the rear bolt. It is therefore important that this bolt head faces the lugs on the carrier.

To remove

1. Remove road wheel, brake drum and packing piece.
2. Disconnect steering arm ball joints—using an extractor.
3. Undo nuts inside brake assembly and release bolts, noting the packing shims beneath the head of the lock stop bolt.
4. Remove steering arm.

To refit

Refitting is straightforward, but ensure that ball pins are centralised (see Outer Track Rods) and that lock stops are correctly adjusted, by selective shimming under the bolt heads concerned.

STEERING UNIT

To remove and refit (see Fig. 3)

The steering unit is removed from above and withdrawn forwards over the front wing.

Disconnect battery.

Remove the front seat.

Roll back front carpet from the front to expose the portion of underfelt behind which steering column cut-out plate is located.

Remove steering wheel, column cowling and flasher switch as described on pages 3 to 6.

Remove two setscrews securing gearshift control shaft upper bracket to steering column.

Drive out tension pin in gear control rod at base of steering column; pull lever and control rod back into car.

Release steering column support bracket (27) secured to lower edge of facia.

Note the packing piece (28).

Remove air cleaner and bracket (RHD only).

Release column steady bracket from bulkhead.

Remove battery and battery carrier (LHD only).

Jack up car and disconnect track rod from drop arm (swing lever).

Remove the four bolts securing the steering box to the frame.

Note the position of packing shims, if these are fitted, between the steering box and the frame.

Lower the car.

Lift the steering box upwards and forwards and withdraw it over the front wing and radiator.

Refitting of the unit is a reversal of the above, but do not replace cowling until final adjustments are made to the steering unit and flasher switch location.

Before securing the top of the column to the bracket under the facia, bolt the steering box to the frame.

Always tighten these fixing bolts first and then refix the facia bracket.

The steady bracket on the bulkhead can then be reconnected.

To dismantle

(Removed from chassis) (see Fig. 3)

Remove filler plug (24) and drain off residual oil.

Undo tab washer securing drop arm nut (17).

Remove nut and washer (16).

Using a suitable extractor, remove the drop arm (swing lever) (18).

Rootes Group special tool RG.132, obtainable from Messrs. V. L. Churchill and Co. Ltd., is recommended.

Remove nuts and washers securing the top cover (19) to the steering box.

Remove the top cover (19).

Remove the top cover joint (20).

Remove the guide roller (6) from the main nut (4).

Remove the rocker shaft (10) from the steering box.

Remove setscrews and washers securing bottom plate (21) to steering box.

Remove the bottom plate (21).

Remove joints and shims (22/23).

Remove lower bearing cup (7), and the balls (8).

Hold the main nut and unscrew the inner column (3) from it, withdrawing the column through the aperture in the lower end of the steering box.

Recover the upper bearing balls (8) which are released as the column is withdrawn.

Lift out main nut assembly (4) from the steering box.

To dismantle main nut, remove balls and then remove bolts and tabwashers securing transfer tube retaining clip.

Remove clip and transfer tube. *It should be noted that as the nut assembly is supplied complete, there is not normally any advantage to be gained by dismantling this component.*

Remove the upper bearing cup (7) from the steering box, and the collar behind the cup.

If it is necessary to remove the top column bearing, (consisting of a caged ball race incorporating a seal), this should be taken out with an external type extractor placed under the flange of the bush. Later units have a felt top bush and washer (see Fig. 1).

The rocker shaft bush (11) is a renewable item.

To reassemble

Refit upper column bearing (9) or felt bush if previously removed.

Hold the unit so that the box is uppermost.

Fit the collar and upper worm bearing cup (7).

Insert ball transfer tube into half nut so that it locates in the recesses provided. Fit clip over transfer tube and secure it by two bolts and tab washers.

Load nut assembly with twelve balls ($\frac{3}{8}$"/9·25 mm. diameter). This operation will be facilitated by the use of a liberal quantity of grease.

Pass the main nut assembly through the cover plate aperture and hold it in position whilst the steering inner column is passed through the bottom of the steering box, the top ball race cup and into the outer column. The inner column must be rotated in order to screw the main nut assembly into position. With the main nut assembled to the inner column, load the top bearing with ten $\frac{9}{32}$" (7·14 mm.) balls, using grease to hold them in position.

Push the inner column assembly upwards and then assemble the lower bearing, ten balls ($\frac{9}{32}$"/7·14 mm. diameter) with the assistance of grease.

Make quite certain that all of the balls are properly in place in the worm bearings. Assemble bottom cover plate, obtaining the correct pre-load as described under "To Pre-load the Steering Box".

Fit roller (6) into main nut spigot, grease rocker shaft and lower it into position through top cover aperture.

Screw down top cover plate (19) having first smeared the paper washer (20) with jointing compound.

Adjust the rocker shaft pre-load as described under "To Pre-load the Rocker Shaft".

Do not omit to fill with correct grade of lubricant after unit has been refitted to the chassis.

TO PRE-LOAD THE STEERING BOX

Pre-loading of the steering box consists of two operations—first, the steering column is adjusted and pre-loaded with no pre-load on the rocker shaft, and then the rocker shaft is pre-loaded and the overall pre-load measured at the steering wheel rim.

To Pre-load the Steering Column

As this operation involves the removal of shims from the bottom cover, great care must be taken, if it is performed with unit in the car, to ensure that none of the ball bearings are displaced, since these bearings are uncaged. If the unit has been removed from the car, hold the bottom upwards throughout the operation.

If the unit is in the car, disconnect the centre track rod from the drop arm.

Slacken off the rocker arm adjustment screw in the top cover of the box. Adjust the steering column so that there is no end float, while maintaining perfect freedom of rotation, by removal of shims from underneath the bottom cover plate.

Then pre-load column by removing one ·002"/·003" (·05/·08 mm.) shim from underneath the bottom cover plate. The steering column is now correctly pre-loaded.

To Pre-load the Rocker Shaft

Place the steering box in the straight ahead position and attach a spring balance to the rim of the steering wheel, to apply a pull at right angles to one spoke.

Pre-load the rocker shaft by tightening the adjustment screw in the top cover of the box until a pull of $\frac{1}{2}$ to $1\frac{1}{2}$ lb. (·23 to ·68 kg.) is necessary to start the gear moving from rest. Tighten the locknut on the adjustment screw and refit the locking plate if fitted.

Re-connect track rod and drop arm, after the above operations are completed.

BURMAN F3 TYPE STEERING UNIT

Description (Fig. 1)

The Burman F3 type recirculating ball steering unit fitted to Series IV cars is similar to the unit fitted to earlier cars but the nut is of a different design. The F3 unit has a full nut with a rectangular tipped spigot to fit a guide button located in the rocker shaft lever and an increased number of steel balls to form the connection between the nut and worm cam. These steel balls emerge from one side of the nut and encircle the worm cam for one complete revolution before entering the transfer tube on the opposite side.

To remove and refit

These sequences are unchanged.

To dismantle and assemble

The sequences are similar to those given earlier in this Section but particular attention must be given to the following:—

i. The rocker shaft is withdrawn from the steering box and then the guide button removed from the tip of the nut spigot.

ii. When reassembling the nut, load the thirty one steel balls into the nut with a liberal quantity of grease, filling the transfer tube first and then the helical groove in the bore of the nut.

iii. Locate the guide button on the rectangular spigot on tip of the nut with a smear of grease and feed the rocker shaft into the steering box so the circular aperture in its lever locates the guide button.

POWER-ASSISTED STEERING

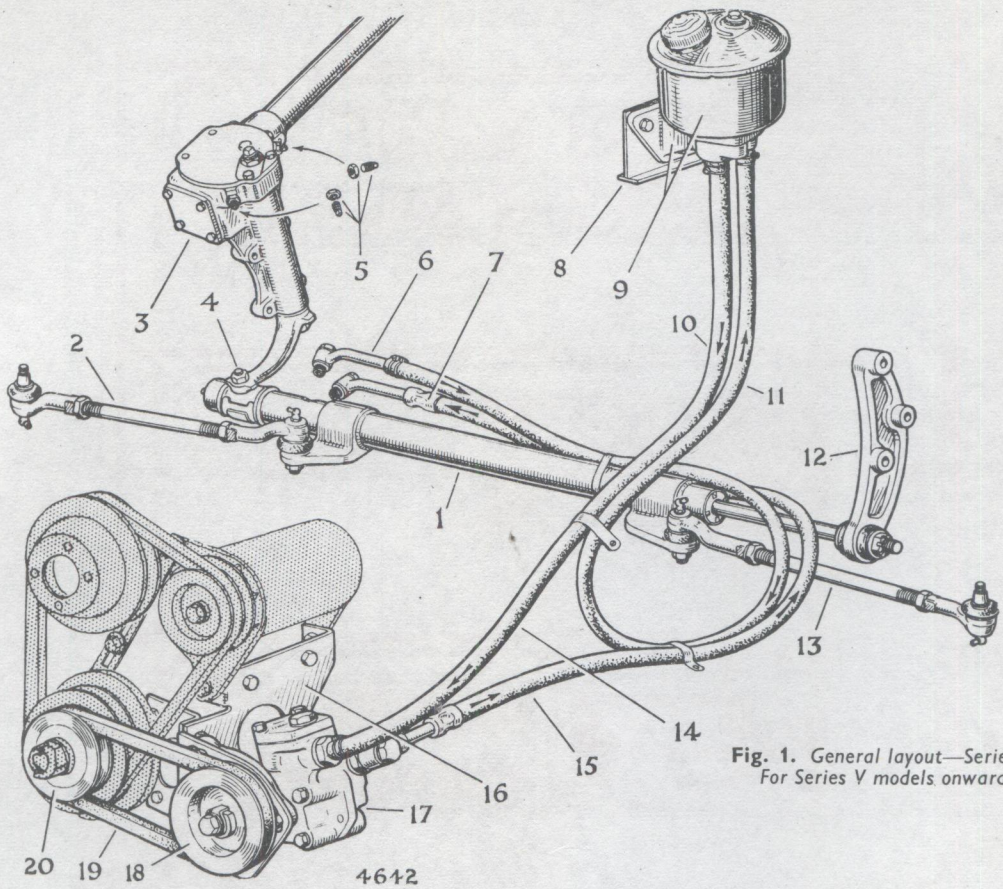

1. Power cylinder
2 & 13. Outer cross tubes
3. Steering unit
4. Power cylinder ball peg
5. The rocker arm stops and lock nuts
6 & 11. Return pipe, power cylinder to reservoir
7 & 15. High pressure supply pipe—pump to power cylinder
8. Reservoir mounting bracket
9. Reservoir
10 & 14. Supply pipe—reservoir to pump
12. Power cylinder ram anchor bracket
16. Pump and dynamo mounting bracket
17. Pump
18. Pump pulley
19. Fan belt
20. Engine drive pulley

Fig. 1. *General layout—Series I to IV models For Series V models onwards, see Fig. 14*

DESCRIPTION

The Hydrosteer Direct-Coupled system is hydraulic and consists essentially of a power cylinder and pump. The power cylinder incorporates a control valve connected direct to a double-acting piston, coupled by flexible pipes to an engine-driven pump supplied with fluid from a reservoir on the bulkhead. The system utilises the standard steering box and is so designed that, should the hydraulic power fail for any reason, the driver will still be able to steer the vehicle manually.

On Series I to IV models the power-assisted steering was fitted as an optional extra but on Series V models onwards it is fitted as original equipment.

Power Cylinder

(Figs. 1, 2 and 6)—Series I to V models

Manual effort from the steering box is directed to the control valve spool by means of the manual ball pin fitted into the drop arm (swing lever). Power assistance from the ram is directed to the steered wheels by the power take-off lugs to which the inner ball pegs of the outer track rods are connected.

The control valve spool is held in the neutral, or central position, by means of a pre-loaded spring.

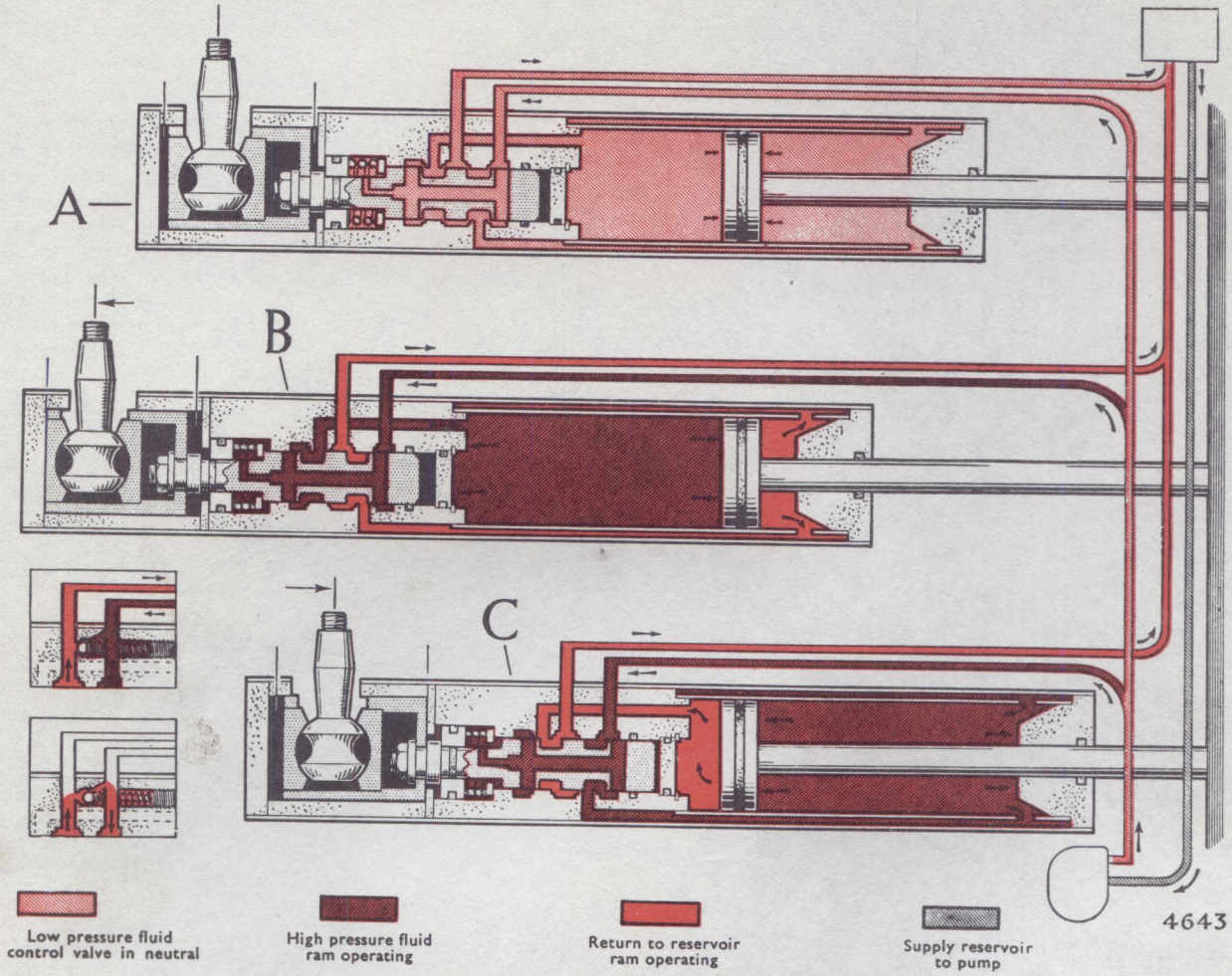

Fig. 2. *Operation of power cylinder*

Series I to IV models

A. POWER ASSISTANCE NOT IN USE

Control valve (spool) in "neutral," free flow of fluid, maintaining balance of pressure on either side of piston.

B, C. POWER ASSISTANCE IN USE

Manual operation of drop arm ball pin operates control valve (spool), directing high pressure fluid to one side of piston. This causes power cylinder to move in the same direction as ball pin, giving power assistance.

Immediately manual control of ball pin is released, control valve (spool) returns to neutral and the pressure difference at each side of piston is equalised as at A.

For steering effort less than that required to overcome the valve pre-load, the spool remains central and the fluid circulates freely on open circuit from the pump, through the valve and back to the reservoir. There being no resistance to flow, no pressure build-up occurs and steering remains purely manual.

For steering effort greater than the valve pre-load, the spool is displaced toward one end of the body, thus directing the fluid to the appropriate side of the piston. The pressure quickly builds up until it is sufficient to overcome the resistance at the wheels, thus transmitting the required steering assistance.

The flow of oil and resulting movement of the cylinder is maintained, within the limits of the wheel travel, so long as the driver continues to turn the steering wheel enough to keep the spool displaced from its centre position.

In the event of the steered wheels being subjected to shock load, the valve spool is moved in the appropriate direction to direct the fluid to that side of the piston which will resist the movement. This blocking action is effective in damping out the kick-backs sometimes felt at the steering wheel.

When it is necessary to steer manually, i.e. if the engine were to stall, or if the car were towed, the small relief valve in the valve body permits free circulation of oil between both ends of the cylinder, thus the steering force is not appreciably increased.

Straight Ahead Driving

When the wheels are in the straight ahead position, the control valve spool is held in the centre or neutral position. In this position, oil from the pump flows past the valve spool lands and returns to the reservoir through the port in the control valve body.

Since only a small amount of back pressure exists in the system under this condition, the pump delivers oil at a low pressure which is transmitted to both sides of the power cylinder piston through the flexible pipes so that a balanced condition exists.

Steering Assistance

When the steering wheel is first turned to the right or left a force is exerted on the control valve spool, thereby displacing it towards one end of the body.

With the spool in this position the oil passage to one end of the ram is closed to pump pressure, but open to the reservoir. The passage leading to the opposite end of the ram is opened to pump pressure.

As the oil from the pump flows into the power ram the pressure increases until it is sufficient to force the steering booster in the appropriate direction, thus providing the power assistance for the turn.

The oil displaced from the other end of the power ram flows back through the control valve to the reservoir.

Operation without Power Supply— Series I to IV models

If the pump fails to deliver oil pressure for any reason, the vehicle may be steered manually. Under this condition, the power steering system operates in the following manner:—

When the steering wheel is turned, the movement transmits the manually applied force to the control valve spool. The spool moves approximately ·045″ (1·1 mm.) until it contacts its stop, when the full manual effect is transmitted mechanically to the steering linkage. With the valve spool in the off centre position oil is directed to either end of the power cylinder through the cylinder relief valve. Thus, manual movement of the power cylinder is not restricted by the necessity of forcing oil back through the pump, and steering effort is not appreciably increased over that required for the manual steering system.

A. Engine idling, power cylinder control valve (spool) in neutral. Fluid flowing freely.

B. Engine above idling speed, power cylinder operating. High output from pump causes pressure build-up behind flow valve, which moves against its return spring and uncovers return to pump intake.

C. Engine above idling speed, power cylinder operating pressure built up in power cylinder (i.e. road wheel obstructed), causing relief valve to move. This uncovers the return passage to the pump rotor.
The relief valve can operate irrespective of the position of the flow valve.

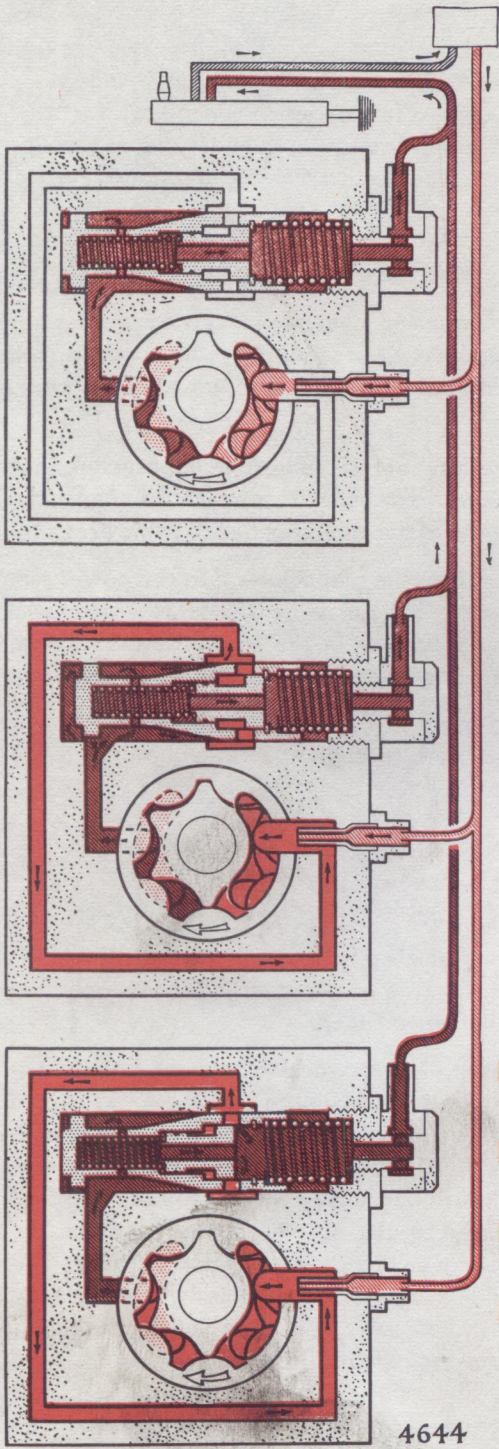

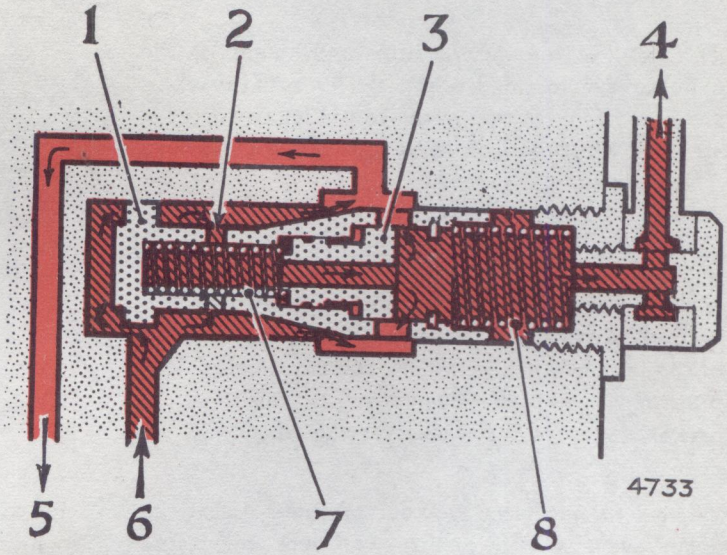

Normal operating pressure, power cylinder operating.

High pressure fluid.

Internal return to rotor via flow control valve (B) or pressure relief valve (C) or both.

Supply reservoir to pump.

Return power cylinder to reservoir.

1. Flow control valve
2. Metering holes (two)
3. Relief valve
4. Feed to power cylinder
5. Return to pump intake
6. Feed from pump
7. Relief valve spring
8. Flow control valve return spring

Fig. 3. *Operation of bi-rotor pump, flow valve and relief valve*
Series I and II models

THE BI-ROTOR PUMP ASSEMBLY (Fig. 3)

As Fitted To Series I and II Models

The pump is driven by a special V-belt from the crankshaft pulley, being mounted on a support bracket bolted to the engine. Three elongated bolt holes in the support bracket provide a means of adjusting the drive belt tension. The oil reservoir contains a filter element through which oil is passed on its return from the power cylinder. The element is held in position by a spring which will allow it to lift off its seat, permitting oil to by-pass the element should it become clogged. An oil level dip-stick is attached to the reservoir filler cap.

The pump is of the eccentric bi-rotor type, the inner rotor, which has six lobes, being driven by the pump drive shaft. The drive shaft is supported by two bronze bushes in the pump body and cover and by a sealed ball bearing to absorb the side thrust at the driven end. The outer rotor has seven lobes and is driven by the inner rotor. As the pump rotors turn, the spaces formed between the rotor lobes increase and then decrease in volume with each revolution, propelling oil from the intake side of the pump to the flow control valve (1).

When the engine is idling the pump is operating at its minimum output which is, however, sufficient to provide power assistance.

To limit pump output at higher engine speeds, a spool type spring loaded flow control valve (1) is provided in the pump body. The valve which is hollow and closed at one end has two metering orifices (2) drilled through its walls. A pressure relief valve (3 and 7), which is also spring loaded, is contained inside the flow control valve (1) and is retained in position by means of a circlip. The flow control and pressure relief valve assembly is retained in the pump body by the oil outlet adaptor.

The flow control valve (1) limits the output of the pump to a maximum of approximately 1·8 Imperial gallons (2·16 American gallons, 8·64 litres) per minute, regardless of pump speed. This is accomplished in the following manner:—

Oil from the pressure side (6) of the pump flows into the chamber containing the flow control valve.

A flat ground on the land at the closed end of the valve allows the oil to flow behind it. The oil also flows to the inside of the valve through the two metering orifices (2) and from here, through the pressure relief valve (3) and the pump outlet (4) to the power cylinder assembly.

When the pump speed is increased due to an increase in engine speed, the pump output tends to exceed 1·8 Imperial gallons per minute. This creates a pressure differential between the outside and inside of the flow control valve (1) due to the restricted flow through the metering orifices (2). Since the pressure at the closed end of the flow control valve (via the flat) exceeds the pressure on the spring loaded end the entire valve assembly moves and compresses the flow control valve spring (8). This action uncovers an annular relief groove on the flow control valve body which permits the excess oil to flow through passages in the pump body back to the reservoir and the inlet side of the pump (5). Thus, the pump output is limited to 1·8 Imperial gallons per minute regardless of pump speed.

The pump produces the oil pressure required in the system to meet all normal steering conditions; the pressure relief valve installed in the flow control valve limiting the pump pressure to 550—650 lb. per sq. inch (38·7/45·7 kgs. per sq. cm.). The two ends of the relief valve (3) are of different diameters and that end having the greater area is fitted nearest the pump outlet so that it is acted upon by the pressure in the system.

A pressure of 650 lb. per sq. inch must be built up in the system before the relief valve spring (7) is compressed and the valve is lifted. When the relief valve (3) lifts, the movement uncovers ports in the flow control valve (1) which allows the oil to return to the reservoir and the inlet side of the pump (5), thus preventing further pressure build-up. The relief valve action is the same regardless of the position of the flow control valve in its bore, since the action of the flow control valve controls only the volume of oil delivered by the pump.

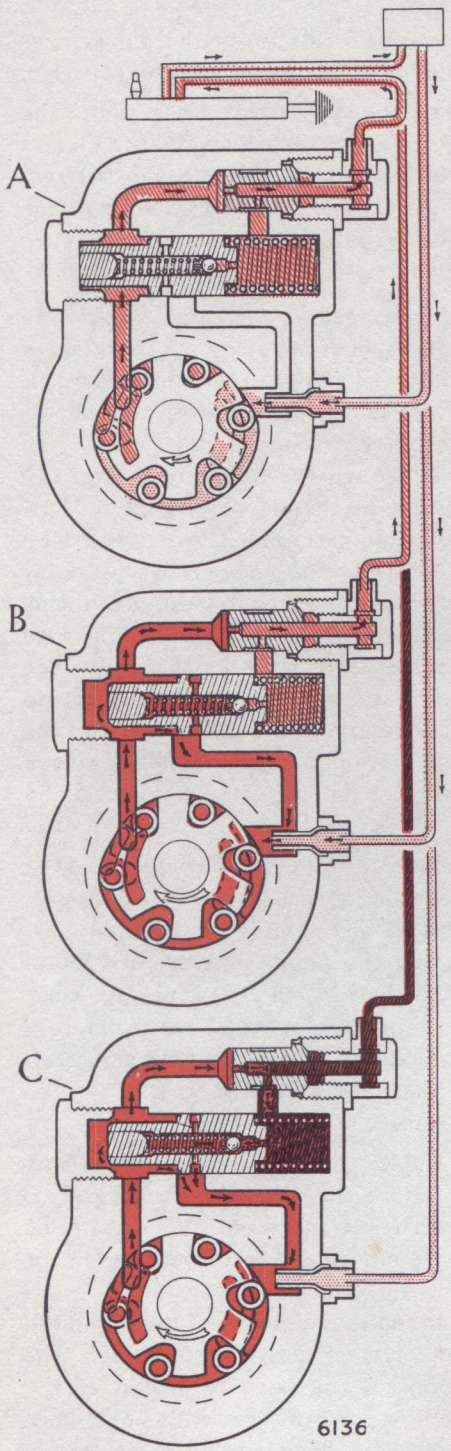

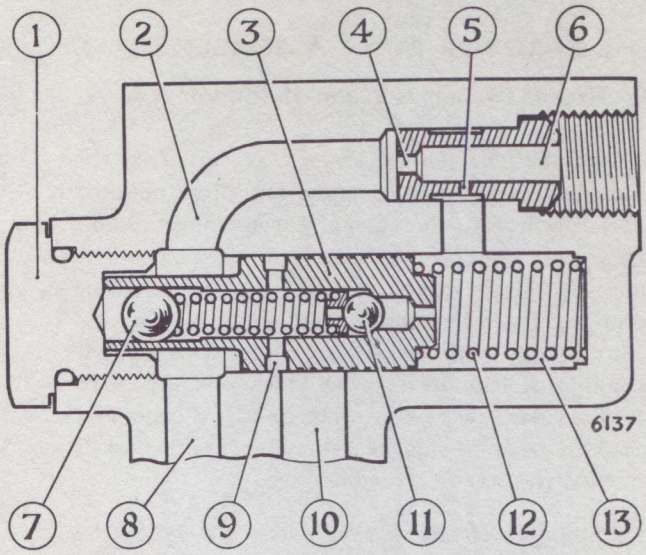

1. HEXAGON CLOSING PLUG
2. PRESSURE OUTLET PORT TO LINE
3. MAIN FLOW CONTROL VALVE
4. PRIMARY DISCHARGE ORIFICE
5. SECONDARY RELIEF ORIFICE
6. FLUID OUTLET TO LINE
7. RELIEF VALVE RETAINING BALL
8. PRESSURE PORT FROM CARRIER CHAMBER
9. RELIEF DISCHARGE HOLES TO BY-PASS
10. BY-PASS TO INLET
11. RELIEF VALVE
12. FLOW VALVE RETURN SPRING
13. SPRING

A. ENGINE IDLING. Flow valve and relief valve remain seated. Pump output sufficient to operate power cylinder and give steering assistance if required.

B. ENGINE ABOVE IDLING. Pump pressure increased. Flow valve moves to uncover by-pass. Relief valve remains closed. Restriction by discharge orifice causes fluid to return to pump intake via by-pass.

C. FRONT WHEEL OBSTRUCTION (Any Engine Speed). Obstruction causes line pressure to exceed relief valve setting. Relief valve opens. Flow valve moves to uncover by-pass. Flow is diverted via by-pass to pump intake.

Fluid supply from reservoir to pump and return from power cylinder to reservoir.

Fluid from pump to power cylinder under normal operating pressure.

Fluid under high pressure due to increased engine speed.

Pump flow valve operating.

Fluid under excessive pressure caused by obstruction at power cylinder. Relief valve operating.

Fig. 4. *Roller type pump—operation of pump, flow valve and relief valve*

ROLLER TYPE PUMP ASSEMBLY (Fig. 4)

Series III models onwards

This pump replaces the bi-rotor type fitted to earlier models and is basically similar in construction, the main variation being the design of the rotor which incorporates the use of six rollers loosely contained in slots in a circular carrier keyed to the pump shaft.

The procedure for removing, cleaning and testing is identical to that given in earlier paragraphs for the bi-rotor type and should be strictly adhered to. The operating pressures and pump output as given for the bi-rotor pump, also apply.

Principle of operation

The rollers contained in the slots of the carrier are confined to a basically circular path by a cam ring, which is mounted eccentrically to the carrier and shaft assembly. Owing to this eccentricity, the space between each pair of rollers increases then decreases during the cycle, propelling oil from the intake side of the pump to the flow control valve.

The flow control valve also serves as the main pressure relief valve. It houses a small pilot relief valve of the ball and spring type, which serves to lower the pressure in the spring chamber of the main valve, causing it to by-pass to inlet so long as the maximum pressure is exceeded.

The large ball shown in Fig. 4 is pressed into the centre bore of the valve to contain the spring and ball assembly. The setting of this ball determines the relief valve pressure. *This is set accurately at the factory and should on no account be disturbed.* The flow control and relief valve assembly is contained in the pump body by a hexagon head closing plug.

Function of Combined Valve (Fig. 4)

As flow control valve.—When discharge flow commences, a pressure drop occurs through the restriction of primary orifice (4). A lower pressure is applied to the spring loaded end of the valve through secondary orifice (5).

This pressure difference increases with increased flow, causing the valve to move against spring (12). When a predetermined flow is reached, the valve uncovers by-pass hole (10), leading to intake side of pump.

Further increase in flow results in further opening to by-pass, thus maintaining a constant flow to the system.

Variations in operating pressure are applied to both ends of the valve and do not upset the pressure difference created by orifice (4). The valve is thus sensitive to alterations of flow, and is insensitive to variations of line pressure.

As Relief Valve.—The above remains true while the line pressure does not exceed the setting of the pilot relief valve situated in the centre of the main valve. When this occurs the ball is lifted from its seat allowing a flow from the spring chamber to by-pass, through holes (9). Owing to the restriction of secondary orifice (5), this causes a further pressure drop in the spring chamber. The main valve then moves to by-pass, irrespective of existing flow control conditions.

As soon as the line pressure drops below the relief valve settings, the pilot valve closes, and the normal pressure difference is restored. The main valve then resumes its normal flow control function.

MAINTENANCE

Reservoir Oil Level

The oil level in the reservoir should be checked at regular intervals. Great care should be taken to prevent dirt entering the reservoir, and the filler cap and surrounding area should be cleaned before removing the cap.

The recommended oil is given in "Section P". A change is made for Series V models onwards and while the new oil is suitable for earlier models the oils MUST NOT BE MIXED.

A dipstick is attached to the underside of the filler cap and the oil level should come up to the "F" mark.

Dirty oil, vegetable oils, shock absorber oil or hydraulic brake fluid must not be used under any circumstances.

Reservoir Filter Element (See Fig. 5)

This filter element should be renewed at regular intervals.

1. Unscrew the reservoir cover retaining bolt and lift off the cover.
2. Remove the old element and place the new one in position.
3. Refit the cover ensuring that the sealing ring is in good condition, and the spring loaded flap valve seats correctly on the top of the element.

Power Cylinder Ball Joint

A lubricator is provided at the steering base end of the power cylinder for lubricating the ball joint at regular intervals.

ADJUSTMENTS

Pump Driving Belt Tension

The driving belt tension should be checked at regular intervals and is correct when it is possible to deflect the belt, in the centre of its run, approximately $\frac{1}{4}$ in. (6 mm.) by normal hand pressure.

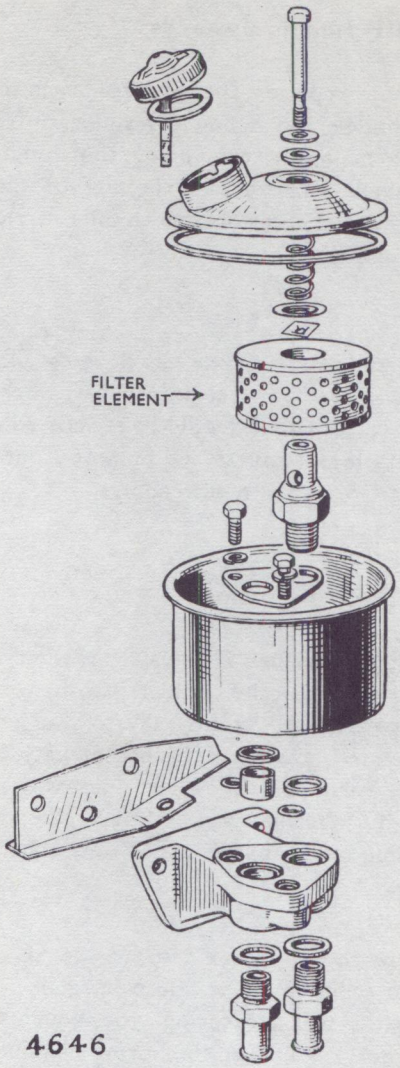

Fig. 5. *Exploded view of Reservoir*

Belt adjustment is made by slackening the three fixing bolts and moving the pump as required on the pivot bolts. The two upper bolt holes are elongated to allow movement of the pump.

Finally, fully tighten the three bolts.

Steering Box Lock Stops

Assuming that the proper wheel lock angles exist,

the steering box lock stops must be adjusted so that a clearance of ·025" (·63 mm.) exists between the stop on the stub axle carrier and the steering arm bolt head. This clearance is necessary to prevent the power cylinder from forcing the steering arms against the stub axle carrier stops when full lock movement is needed.

OVERHAUL PRECAUTIONS

Cleanliness and care throughout the entire procedure cannot be over-emphasised. The major parts of the unit, particularly the valve assembly are machined to very close limits and the precision edges on these parts are vitally important to smooth operation.

Do not clamp or mark sealing surface of the piston rod as damage will result to the seals and bring about the need for more repairs.

When necessary, remove and discard all "O" rings and seals using new ones of the correct part number only, when reassembling. Parts should be cleaned with a suitable solvent, washed and dried. Lubricate all seals and "O" rings during reassembly with the recommended oil, see "Section P".

In the event of a unit becoming faulty or damaged it is strongly recommended that it be returned to the manufacturer for servicing or exchanged for a reconditioned unit under the service replacement scheme. Should circumstances make this impracticable however, then the appropriate servicing instructions should be referred to.

Draining the System (See Fig. 1)

Extreme care should be taken to prevent dirt entering the reservoir while the cover is removed. Do not disturb the filter element:—

1. Disconnect the supply pipe (7) identified by its crimped-on end from the power cylinder (1) by withdrawing one banjo bolt and two washers; position in a suitable container.
2. With the pipe held in the container, start the engine and allow to idle until all the fluid is forced from the unit. DO NOT RUN THE ENGINE ABOVE IDLING SPEED. As soon as the fluid starts to show large quantities of air bubbles, stop the engine.
3. Disconnect the return pipe (11) at the reservoir and place in container. Turn steering from lock to lock to empty power cylinder of oil.

To refill and bleed System

Extreme care should be taken to prevent dirt and other foreign matter from entering the system and on no account must dirty oil be used. Proceed as follows:—

1. Fill the reservoir slightly higher than normal.
2. Start engine and allow to idle for a short time.
3. With engine idling, turn steering wheel backwards and forwards several times from extreme locks to expel all air from the system.
4. Check oil in reservoir and top up to correct level. Repeat 3 and 4 if necessary.

OVERHAULING INSTRUCTIONS FOR POWER CYLINDER—Series IV models

Fig. 6 shows a cross sectional view of the power cylinder and Fig. 7 an exploded view. Parts that have been altered, since this unit was fitted to Super Snipe Series I, are annotated with capital letters. The servicing of the power cylinder should normally be confined to the adjustment or replacement of the ball pin (6) and its associate parts, or the seals in the end bearing.

If the action of the hydraulic section of the unit needs attention, a complete replacement power cylinder should be fitted. Should this not be possible, as might be the case in some export territories, the unit may be serviced as described in the following paragraphs.

To remove and refit (Fig. 1)

1. Identify and remove the supply and return pipes (6 and 7) from the power cylinder (1) by withdrawing one banjo bolt and two washers each; release the clip securing the supply and return pipes to the power cylinder body.
2. Disconnect the inner ball pin of each track rod (2 and 13) from its lug on the power cylinder body, using an extractor.
3. Extract the split pin, remove the nut, plain washer and outer rubber pad securing the piston rod to the abutment bracket (12).

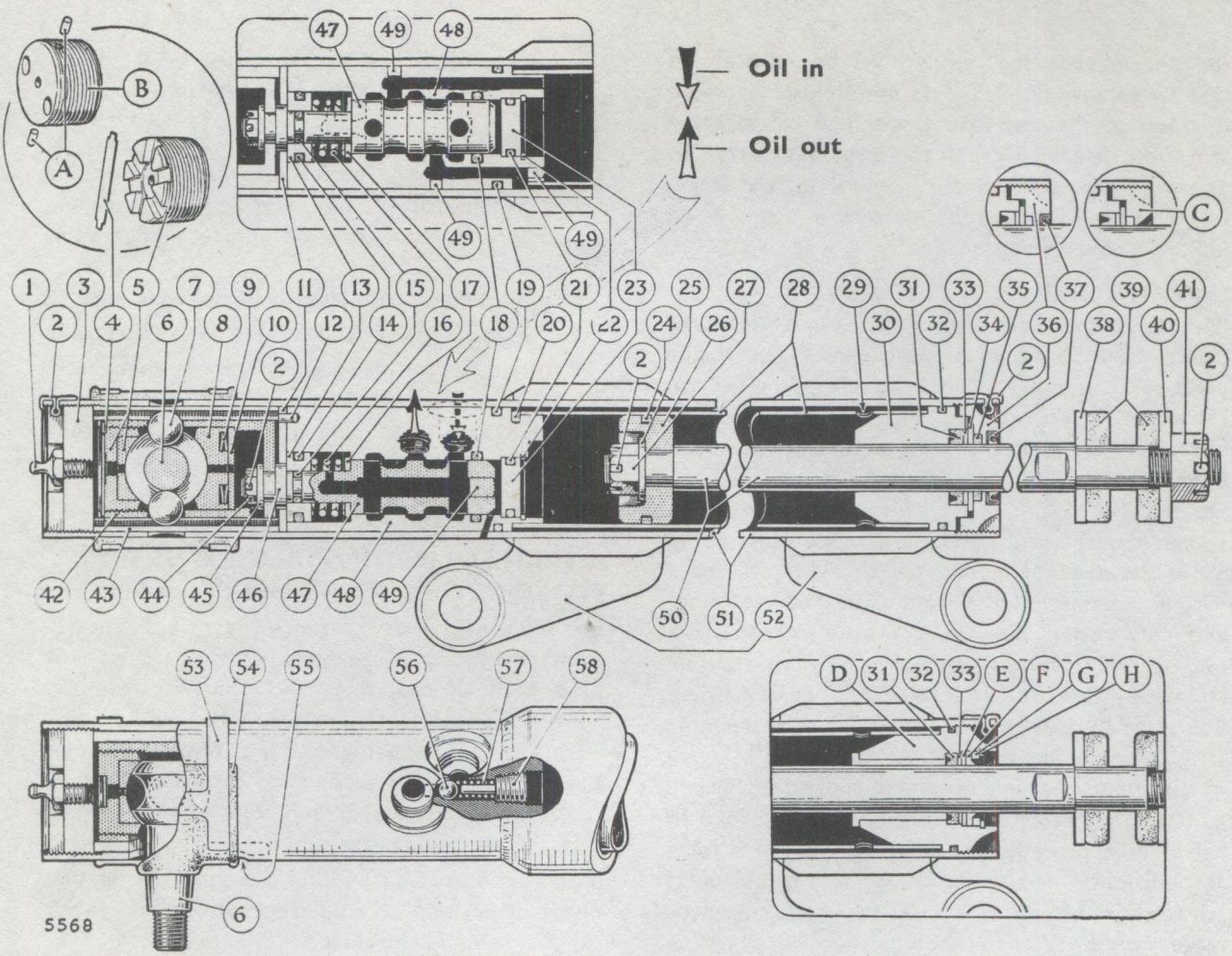

1. GREASE NIPPLE
2. SPLIT PIN
3. END COVER
4. STEEL LOCKING STRIP
5. ADJUSTABLE BALL HOLDER AND CUP
6. BALL PIN
7. HARDENED STEEL BALLS
8. BALL CUP
9. TWO BELLEVILLE WASHERS
10. BACKING PLATE
11. SPACER
12. LOCATING PEG
13. REACTION RING
14. "O" RING
15. "O" RING
16. SPRING
17. REACTION WASHER
18. "O" RING
19. "O" RING
20. LOCATING PEG
21. "O" RING
22. CIRCLIP
23. END COVER
24. PISTON RING
25. STEEL WASHER
26. PISTON
27. PISTON SECURING SLOTTED NUT
28. INNER TUBE
29. INNER TUBE PORT HOLES
30. BEARING
31. GLAND SEAL
32. "O" RING
33. VELLUMOID WASHER
34. STEEL WASHER
35. RUBBER WASHER
36. BEARING RETAINING NUT
37. SCRAPER SEAL
38. STEEL WASHER
39. RUBBER WASHERS
40. STEEL WASHER
41. SLOTTED NUT
42. OPERATING SLEEVE
43. LOCATING SLEEVE
44. SLOTTED NUT
45. HARDENED WASHER
46. COLLAR
47. CONTROL VALVE SPOOL
48. CONTROL VALVE BODY
49. BLANKING PLUG
50. PISTON ROD
51. OUTER TUBE
52. OUTER TRACK ROD CONNECTING ARMS
53. DUST EXCLUDER CLIP
54. RUBBER DUST EXCLUDER
55. LOCATING TONGUE
56. RELIEF VALVE BALL
57. RELIEF VALVE SPRING
58. PLUG AND PIN

*A. NYLON PLUGS
*B. BALL CUP HOLDER
*D. BEARING
*E. STEEL WASHER
*F. SCRAPER RING
*G. THICK STEEL WASHER
*H. CIRCLIP
C. BEARING NUT USED WITH BEARING (30) BEFORE INTRODUCTION OF SCRAPER SEAL (37)

**Early type rear bearing and sealing arrangement*

Fig. 6. *Sectional view of Power Cylinder Series I to IV models*

4. Remove the nut (4) and extract the manual ball pin from the drop arm (swing lever). Support this end of the unit during the release of the ball pin from its taper.
5. Withdraw the unit from the car and temporarily replace one rubber, one steel washer and nut just removed to prevent loss. One rubber and one steel washer are fitted on each side of the abutment bracket (12).

Reverse this procedure for refitting, the supply pipe can be identified by its crimped on end. Fit new sealing washers, one each side of the banjo unions and tighten the banjo bolts to the torque given in the "General Data Section". Bleed the system of air.

Before tightening the clip, which secures the supply and return pipes to the power cylinder, ensure that the pipes do not foul the piston rod or other adjacent parts.

To dismantle (Fig. 6)

After removal of the unit from the vehicle, drain oil from cylinder by moving the piston rod in and out several times from one extreme end of its travel to the other, then proceed as follows:—

1. First remove anchorage washers (38), (39) and (40) from end of piston rod.
2. Remove the rubber dust excluder (54) and its retaining clip (53) from the ball pin and remove the split pins (2) from each end of the unit.
3. At the ball pin end unscrew the end cover (3) (use Churchill special tool RG271).
4. Remove the ball cup locking strip (4) using a small hook. Unscrew the ball cup holder (5) HALF A TURN only using Churchill tool RG.270. This strip was not used on early units which had a ball cup holder "B" and two nylon locking plugs "A" shown in upper inset of Fig. 6.
5. Remove grooved locating sleeve (43) by bumping ball pin end steering arm connection on a hardwood block. The two anti-roll balls (7) can then be removed through their access holes in the outer tube (51) and the ball pin (6) removed after unscrewing and removing the ball cup holder (5).
6. Ensure that the exposed part of the piston rod (50) is clean and free from roughness or burrs especially at the spanner flats at the outer end. Unscrew the bearing retaining nut (36) taking care not to lose the steel washer (34) and thick rubber washer (35), (or nut "C" or complete assembly "D") using Churchill tool RG.270 and remove the complete piston rod assembly from the unit.
7. Slide the bearing (30) or the bearing assembly "D" off of the piston rod.
8. The piston ring (24) should be left in place if it is not being renewed. If the piston (26), or the piston rod (50) is in need of renewal remove the split pin, slotted nut (27) and steel washer (25) that secure the piston to the rod.
9. From the inside of the bearing remove the vellumoid washer (33) and the gland seal (31). On the early type bearing "D" remove the circlip "H", washer "G", scraper ring "F", flat metal washer "E", vellumoid washer (33) and gland seal (31).
10. The valve body (48), spool (47) and inner tube assembly (28) may now be removed by a few light blows on a wooden block inserted in the ball pin end and resting on the inner ball cup.
11. Slide out the spool assembly. Extract the ball cup (8), Belleville washers (9) and backing plate (10) by tapping the end of the operating sleeve on a wooden block.
12. Remove inner tube (28) from the valve body (48). It is a light press fit on the body and should be removable without undue force. The purpose of removal is to obtain access to the parts mentioned in the next paragraph.
13. Remove the circlip (22) from the valve body (48) and slide out the end cover. Remove the "O" rings from the end cover (23) and the bore of the valve body.

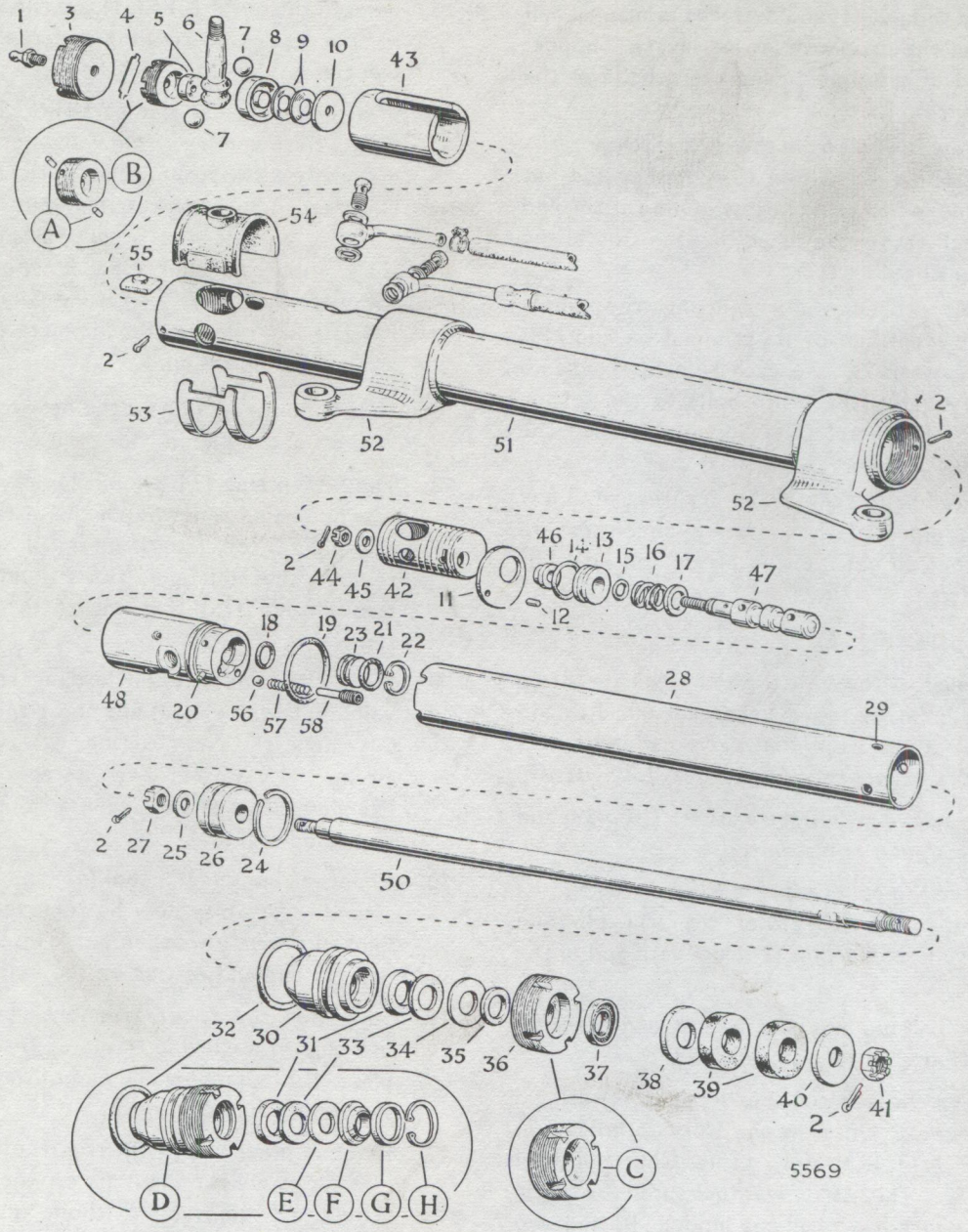

Fig. 7. *Exploded view of Power Cylinder Series I to IV models*
The reference numbers used in this illustration correspond with those shown in Fig. 6 and its accompanying list of parts.

14. Unscrew the plug and pin (58) at the cylinder end of the valve body, using a suitable Allen key and remove the cylinder relief valve spring (57) and ball (56).
15. On early units the nut (44) was staked to the threaded end of the control valve spool (47) and MUST NOT BE UNDONE except to fit another spool valve. In such cases the staked nut must be replaced by the latest slotted nut (44) and latest spool, the threaded end of which is drilled to take the split pin.

Inspection of the Power Cylinder

1. Thoroughly clean all parts of the power cylinder and inspect for wear or damage.
2. Examine the spool (47) and body (48) for burrs or scoring. Burrs may be removed with a very fine oil stone. If these parts are in any way suspect they should be replaced.

   CAUTION: Do not round off the sharp edges on the valve spool (47) as this would alter the highly critical width of the spool lands and very adversely affect the performance of the power cylinder.
3. With "O" rings (14) and (18) removed insert the spool (47) into the valve body (48) and check its fit. With a light film of oil the spool should pass freely through the body.
4. Inspect the mating surfaces of the operating sleeve (42) and locating sleeve (43) for wear or damage. The surfaces should be free from burrs or scores. It is expected that a slight marking will be found in the grooves of the locating sleeve (43) and in the corresponding groove on the ball pin (6) due to the action of the anti-roll ball bearings (7). If chipped or indented renew as required.
5. Check the fit of the operating sleeve (42) in the locating sleeve (43):—

   Reassemble the backing plate (10), Belleville washers (9), ball cup (8), ball pin (6), outer ball cup and ball cup holder (5) into the operating sleeve (42) and place the ball bearing (7) in position in the holes in the sleeve (42). Slide the assembly into the locating sleeve (43), after lightly lubricating the mating surfaces. The operating sleeve should slide freely in the locating sleeve. Dismantle the assembly after checking.
6. Examine the inner tube (28), piston (26), piston ring (24), piston rod (50) and bearing (30) for wear or scoring and renew if necessary.
7. Inspect the piston rod anchorage rubbers (39) and steel washers for wear or damage and renew if necessary.
8. Normally during an overhaul all "O" rings should be removed and discarded and new rings fitted on reassembly.

Reassembly of the Power Cylinder

(A) *Valve Body Assembly*

1. Assemble the cylinder relief valve ball (56) and spring (57) to the valve body and screw home the plug and pin (58).
2. If any of the locating pegs are loose or damaged replace with new pegs by tapping lightly into the holes provided.
3. Assemble new "O" rings into the valve body (48) and on to the end cover (23), slide the end cover into the body and secure with the circlip (22). Assemble a new "O" ring on to the outside diameter of the body (48).

   Extreme care must be taken when fitting "O" rings to avoid damage which would cause subsequent leakage.
4. Assemble the inner tube (28) on the valve body (48). This is a light press fit and should be assembled carefully by means of a few light taps with a wooden mallet, lining up the slot in the inner tube with the locating peg (20).

(B) *Valve Spool Assembly*

1. Fit new "O" rings (14) and (16) to reaction ring (13) and spool spindle (47) where it fits inside the reaction ring and assemble valve spool assembly comprising items 42, 44, 45, 11, 46, 12, 13, 15, 16, 17 and 47 into the spool body (48) after lightly lubricating the spool with the recommended oil, see "Section P".

(C) *Piston Rod Assembly*

Note

To eliminate the possibility of damage to the gland seal (31) in the bearing (30) or bearing "D", a suitable protective sleeve, such as the Churchill tool RG.309, should be put on the outer end of the piston rod.

1. If required assemble the piston ring (24) on the piston (26) and then place the piston on the piston rod (50), flat face first. Fit the flat washer (25) and slotted nut (27). Tighten the nut to 35—45 lbs. ft. (4·8—6·2 kgm.). Do not overtighten as this may cause the piston to bind in the tube. Split pin the nut securely.

2. *Latest end bearing*

Assemble the seal (31) and vellumoid washer (33) into the bearing (30) as shown in Fig. 6 and slide these parts onto the piston rod (50) from the piston rod outer end, using the Churchill sleeve RG.309 to prevent damaging the seal. Also slide steel washer (34) and thick rubber washer (35) onto piston rod. Fit scraper seal (37) into the bearing nut (36) with its scraper edge pointing outward as illustrated. Power cylinders fitted with bearing nuts "C" as shown in inset should have the latest type nut (36) with scraper seal (37) fitted.

3. *Early end bearing*

Insert a new gland seal (31), flat face first carefully on to the small end of the Churchill tool RG.272. Insert the tool in the bearing and press home the seal, using the other part of the tool. Assemble the vellumoid washer (33), steel washer (E), scraper ring (F), with its bevelled edge towards the anchorage end, thick steel washer (C) and circlip (H) into bearing. See lower inset of Fig. 6. Slide the complete bearing assembly onto the piston rod (50) from the piston rod outer end, using the Churchill sleeve RG.309.

4. Assemble a new "O" ring (32) on to the outer diameter of the bearing.

(D) *Final Assembly*

1. Compress the piston ring and slide the piston rod assembly into the inner tube (28) as far as it will go, locating the recessed end of the bearing in the end of the tube.
2. Slide the spool assembly (47) into the valve body (48), taking care to prevent damage to the sealing edges. The assembly must be positioned so that the small hole in the spacer (11) locates on the dowel (12) in the end of the valve body.
3. Assemble the backing plate (10) into the bore of the operating sleeve (42), chamfer first, and ensure that it is correctly seated. Place two Belleville washers (9) back to back (inner diameters together) in the recess in the ball cup (8) (a smear of grease will help to retain the washers in position) and assemble the ball cup into the operating sleeve (42).
4. Ensure that threads inside the end of the outer tube (51) are clean and free from sharp edges and burrs. Grease the threads to allow easy passage for "O" ring on outside of valve body (48). Hold the outer tube and slide the complete inner assembly into the outer tube from the anchorage end. Care should be taken to see that the hose ports in the valve body (48) line up radially with the ports in the outer tube (51). Screw the bearing nut (36), or the bearing assembly "D", into the end of the outer tube until the ports line up longitudinally and a slot in the bearing is in line with the split pin hole. This operation should be carried out with the power cylinder horizontal, otherwise the spool will tend to fall out of the valve body.
5. Apply a liberal coating of grease to the spherical surface of the ball pin (6) and assemble through the holes in the outer tube and operating sleeve. Renew the two nylon locking plugs "A" when replacing the first type of ball cup holder "B". Place the ball cup in position and screw into the operating sleeve (42), in order to hold the ball pin in position (do not tighten at this stage).
6. Assemble the ball bearings (7) through the holes in the outer tube and slide the locating sleeve (43) into the tube, making sure that the ball bearings engage on to the grooves and that the slot in the sleeve fits on to the tongue (55) in the outer tube.

7. Screw the ball cup holder (5), or ball cup holder (B) as far as possible and then screw back one-quarter turn to allow the Belleville washers to exert a proper tension to the ball pin (6). Fit the steel locking strip (4); where used, making sure that its tongued ends fit into the two holes in the outer end of the operating sleeve (42) and into one of the slots in the end of the ball cup holder (5).
8. Screw home the end cover (3) which must be tightened securely to ensure satisfactory locking on the components between itself and the bearing (30), or "D".
   The end tube may have to be re-drilled, using a $\frac{3}{64}$ in. (3·5 mm.) drill, before the split pin (2) securing the end cover can be assembled. *On no account may the end cover be unscrewed to make a slot in the cover line up with the existing hole in the tube.*
9. Fit the two split pins to lock the bearing nut (36), or bearing "D", and the end cover (3), screw in the oil nipple and apply an oil gun. Assemble the rubber dust excluder (54) to the ball pin and fit the retaining clip (53) in position.
10. Assemble one steel washer and one rubber pad to the piston rod end. Final assembly of second rubber pad (reverse to first pad) and steel washer is then made when installing to vehicle and secured by the slotted nut. This nut should be tightened until the outer steel washer is against the shoulder provided on the piston rod and locked with split pin.

Testing power cylinder for oil leak after reassembly

This can be done by sealing off the outlet connection and connecting a CLEAN compressed air supply to the inlet connection. A pressure of about 100 lbs. in^2 (7 kg. cm^2) should be applied and a check made for air leakage by applying soap suds around possible points of leakage. THE RAM MUST NOT BE IMMERSED IN WATER owing to the danger of rusting vital parts.

OVERHAUL OF BI-ROTOR PUMP (Fig. 8)

Series I and II models

To remove and refit

1. Detach the high and low pressure hoses from the pump by withdrawing a banjo bolt and slackening a hose clip respectively, trap the escaping oil in a suitable container.
2. Remove the driving belt from the pump pulley by slackening the three pump attachment bolts, moving the pump toward the engine and running the belt off the pulley.
3. Withdraw the pulley and key from the pump shaft by releasing the tabwasher and removing a bolt and washer from the centre of the shaft.
4. Remove the pump from the bracket by withdrawing three bolts and washers, identifying any shims that may be evident between the pump flange and the bracket.
5. Refitting is the reverse of the removal sequence but particular attention must be given to the following.
   i. Return any shims to their original positions and tension the driving belt, see under "Adjustments".
   ii. The banjo bolt securing the high pressure hose to the pump is fitted with two new sealing washers, one each side of the banjo connection and the banjo bolts tightened to the torque given in the "General Data Section".
   iii. The reservoir is filled with the oil recommended in "MAINTENANCE" and the system is bled of air, see under "TO REFILL and BLEED SYSTEM".

To dismantle

1. Remove the two screws securing the flange adaptor or transfer cap to the pump housing.
2. Lift off the paper joint.
3. Remove the bolts and lock washers which secure the pump cover (20) to the pump body (9).
4. Lift the "O" rings (11 and 13) from their grooves in the pump housing.
5. Remove the oil pump rotors (17 and 18) and the rotor drive key (16) from the drive shaft (15), carefully noting their outer ends.
   Handle the rotors, pump body and cover carefully, as nicks, burrs, cracks or scratches may render them unfit for further service.

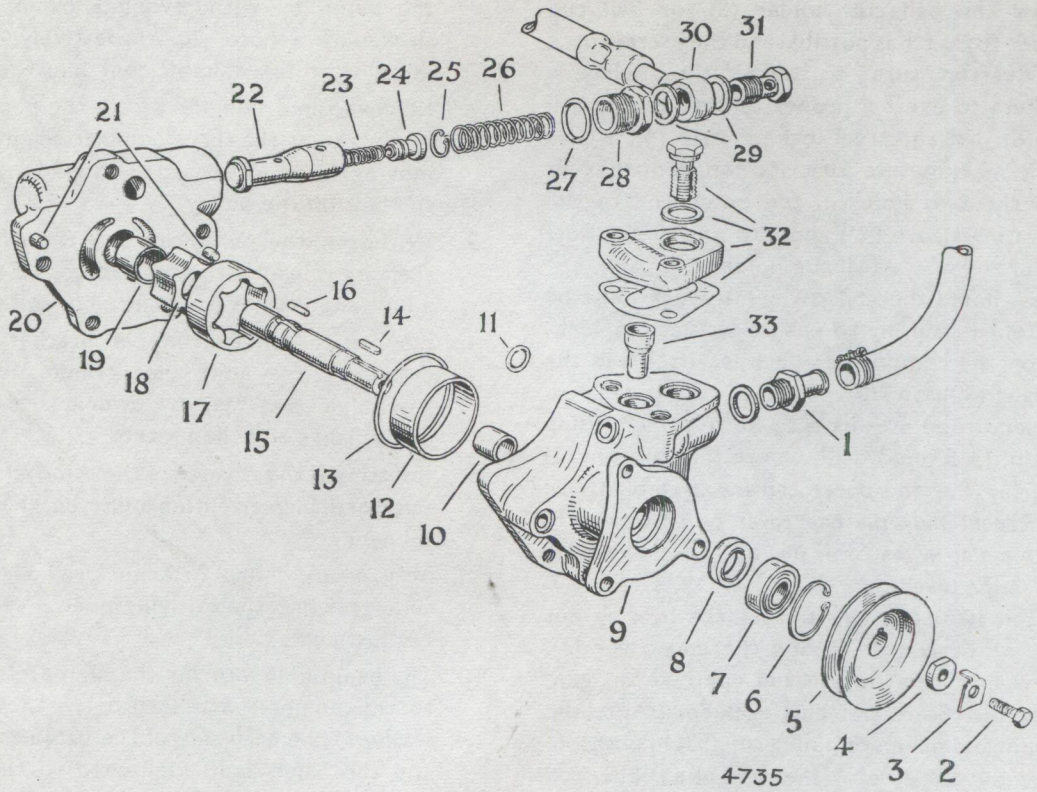

1. OIL FEED PIPE ADAPTOR
2. PULLEY FIXING BOLT
3. PULLEY FIXING BOLT LOCK WASHER
4. WASHER
5. VEE PULLEY
6. CIRCLIP
7. BALL BEARING
8. OIL SEAL
9. PUMP BODY
10. DRIVING SHAFT BUSH
11. "O" RING
12. INSERT
13. "O" RING
14. PULLEY KEY
15. ROTOR DRIVING SHAFT
16. INNER ROTOR KEY
17. OUTER DRIVEN ROTOR
18. INNER DRIVE ROTOR
19. DRIVE SHAFT BUSH
20. PUMP END COVER
21. DOWELS
22. FLOW CONTROL VALVE
23. RELIEF VALVE SPRING
24. RELIEF VALVE
25. CIRCLIP
26. FLOW CONTROL VALVE SPRING
27. "O" RING
28. ADAPTOR
29. BANJO JOINT WASHER
30. OUTLET BANJO
31. BANJO UNION
32. BLANKING PARTS FITTED WHEN DASH MOUNTED RESERVOIR IS USED
33. VENTURI TUBE

Fig. 8. *Exploded view of bi-rotor pump*
Series I to III models

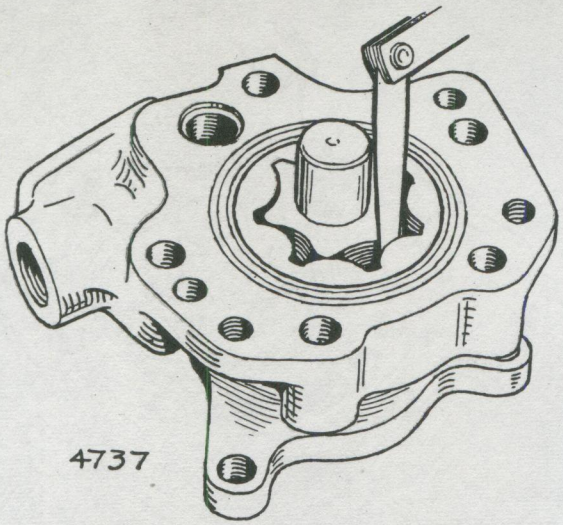

Fig. 9. *Checking clearance between rotors*

6. Clamp the pump body (9) in a vice with soft jaws, then remove the circlip (6) retaining the rotor shaft bearing (7). Press or tap the rotor shaft and bearing from the oil pump housing, being careful not to damage the shaft or bearing. The bearing is of the sealed type and it should always be renewed when a major overhaul is being carried out. Press the bearing (7) off the shaft (15), using an arbor press and a suitable adaptor which will bear against the inner race of the bearing.

7. Inspect the rotor shaft oil seal (8) for wear or damage. If the seal is worn or damaged, remove it from the pump body with a drift.

8. Remove the oil pump outlet adaptor (28) and remove the "O" ring (27). Remove the flow control valve spring (26) from its location.

9. Using a piece of hooked wire, carefully pull the flow control valve (22) out of the pump housing.

10. Remove the circlip (25) that secures the pressure relief valve (24) and spring (23) in the flow control valve (22). Remove the relief valve and spring from the bore of the flow control valve.
Handle the valve carefully to avoid damage.

Cleaning, Inspection and Repair (Fig. 8)

Wash all parts except the rotor shaft bearing assembly (7) in a suitable solvent. Do not soak the bearing in solvent, as the lubricant, sealed in the bearing, may become diluted by the solvent.

Inspect the pump body and cover for signs of wear caused by rotation of the rotors, and check the bushings (10) and (19) in the body and cover for wear or scores.

If the pump cover or the bushing in the cover is worn or damaged, replace the cover and bushing assembly.

Inspect the drive and driven rotors (18) and (17) for wear, cracks or scores. If either rotor is damaged or worn, replace the pump body and rotor assembly. if the rotors appear to be in good condition, proceed as follows:—

1. Press the rotor shaft bearing (7) on to the rotor shaft (15), using a suitable adaptor, until the bearing is seated against the shoulder on the shaft. Tap the shaft and bearing assembly into the pump body until the bearing is seated in the body.

   Apply the pressure to the *outer* race of the bearing when installing in the pump body.

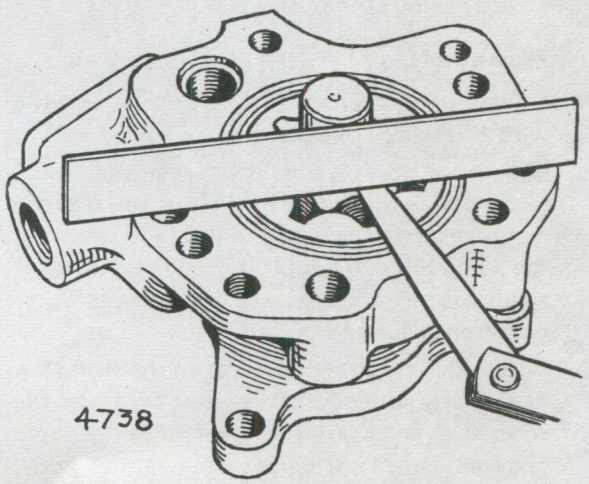

Fig. 10. *Checking rotor end clearance*

2. Install the drive rotor with its key (16) on the rotor shaft, then install the driven rotor. The outer ends of both rotors must be in their original positions.

   Check the clearance between the rotors at all points with a feeler blade. If the clearance exceeds ·006″ (·15 mm.) replace the pump body and rotor assembly. See Fig. 9.

3. Check the clearance between the top of the rotors and the surface of the pump body with a feeler blade and a straight edge. If the clearance exceeds ·0025″ (·06 mm.), replace the pump body and rotor assembly. See Fig. 10.

4. Check the clearance between the outside diameter of the driven rotor and the insert in the pump body. If the clearance exceeds ·006″ (·15 mm.), replace the pump body and rotor assembly. See Fig. 11. If all the clearances are within the specifications, remove the rotors, shaft and bearing from the pump body.

5. Dry the pressure relief valve and the bore of the flow control valve thoroughly. Insert the relief valve in the bore of the flow control valve, then shake the valve. If the relief valve does not move freely in the bore, remove it and check for burrs. Remove all burrs with a very fine oil stone. Check the flow control valve for free movement in the bore of the pump cover. If necessary remove all burrs with a very fine oil stone.

To reassemble

1. When assembling, all parts should be covered with a light film of oil.

2. If the rotor shaft oil seal (8) was removed, install a new seal, with the lip of the seal towards the pump rotors. The seal should be driven into the pump body (9) until it is firmly seated, using a suitable adaptor that will bear on the outer diameter of the seal.

3. Ensure that there are no burrs on the shaft (15), particularly around the keyway, then tap the rotor shaft and bearing assembly into the pump body until the bearing is seated in the body, and install the circlip (6).

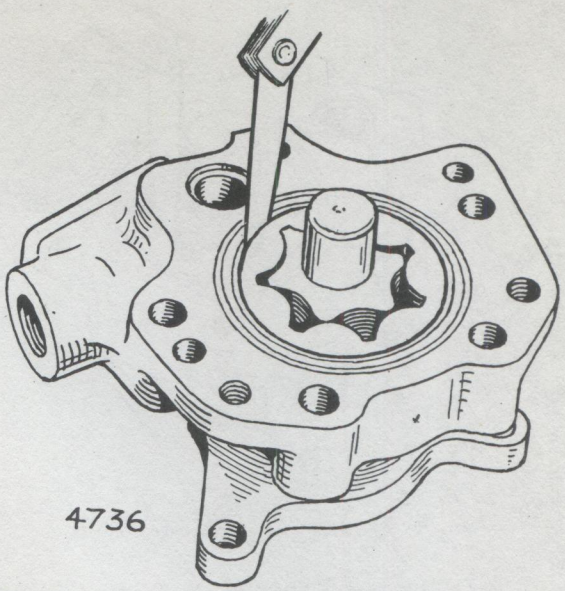

Fig. 11. *Checking clearance between driven rotor and insert*

4. Install the drive rotor (18) and pin (16) on the rotor shaft, then install the driven rotor (17).

5. Position the pressure relief valve spring (23) and the pressure relief valve (24) in the bore of the flow control valve (22) and install the circlip (25).

6. Place the flow control valve in the bore of the chamber, being careful not to damage the valve lands or the bore of the chamber.

7. Install a new "O" ring (27) on the pump outlet adaptor (28), place the flow control valve spring on the valve and fit the outlet adaptor on to the pump.

8. Position new "O" rings (13) and (11) in their recesses in the pump body.

9. Position the pump cover on the pump body and secure with the bolts and spring washers. The bolts must be tightened down evenly.
   Check the rotor shaft for free operation. The shaft must rotate freely without binding. If the shaft does not rotate freely, dismantle the pump and locate the cause.

10. Install the key (14) in the keyway on the rotor shaft, tap on the pulley, install the lockwasher and nut and tighten.
Locate two new "O" rings in position on the pump body, place the flange adaptor or transfer cap in position and secure with the two screws.

Pump Pressure Test

This test should be made after overhauling the pump or when the steering becomes heavy.

1. Disconnect the oil supply hose (7) (Fig. 1) at its banjo connection on the power cylinder.
2. Fit Churchill pressure check gauge adaptor RG.276 to the banjo end of the pipe line previously removed from the power cylinder.
3. Connect a pressure gauge capable of reading to at least 600 lb./sq. in. (42 kg./sq. cm.) to the adaptor. The Churchill L.188 pressure gauge can be used.
4. Start engine and run at a fast idle speed for a very short time. The pump will rapidly heat up under this condition of testing. A minimum gauge reading of 550 lb./sq. in. (39 kg./sq. cm.) should be shown. If the gauge reads below this figure the following faults may exist:—
   (*a*) Pump driving belt slipping.
   (*b*) Relief valve sticking.
   (*c*) Internal wear in the pump causing excessive clearance between the rotor lobes.

After completing this test, reconnect the feed hose (7) (Fig. 1) to the power cylinder and bleed the system. Then check for oil leakage at the banjo joint (7) as the steering is turned from full lock to full lock several times. The steering must be turned because high pressures are only built up while the power cylinder is operating.

IMPORTANT.—*Do not run engine above fast idling speed when making pressure test and keep pump running for only short periods, with shut-off valve closed, as considerable heat will be generated by the pump which may result in damage.*

OVERHAUL OF ROLLER TYPE PUMP
Series III models onwards

Before deciding to remove the pump for an overhaul, a thorough check should be made on the complete system and the pump should be tested in the manner described in earlier paragraphs for the bi-rotor pump. If, however, the trouble is traced to the pump and an overhaul is considered necessary, the following procedure must be strictly observed.

To dismantle (Fig. 12)

Handle all parts very carefully to avoid nicks, burrs, scratches and dirt which could render the parts unfit for use.

1. Drain as much of the remaining fluid as possible from the pump and clamp the pump lightly in a vice with the housing cover upwards.
2. Remove the six bolts securing the housing cover and lift the cover vertically from the housing to prevent internal parts from falling out. If the housing is found to be tightly fitted, gently tap with a soft hammer to loosen. Do not use levers between the mating faces.
3. Remove the O-rings from around the cam-ring and the by-pass orifice and discard.
4. Lift out the six rollers from the housing and withdraw the carrier from the shaft, then remove the carrier driving pin from its seat. The cam ring should slide from the housing and must be removed only by hand.
5. Reverse the pump in the vice with the end plate uppermost and with a suitable punch, mark the end plate relative to the pump housing to facilitate refitting.
6. Remove the four bolts securing the end plate.
7. Withdraw the end plate, shaft bearing and driving shaft. These form an assembly and a sharp pull by hand should suffice for their removal.
8. Using a suitable extractor, remove the oil seal from the housing. A new oil seal will be required.
9. Remove the hexagon closing plug from the pump housing and withdraw the combined valve unit and its return spring from the valve chamber.

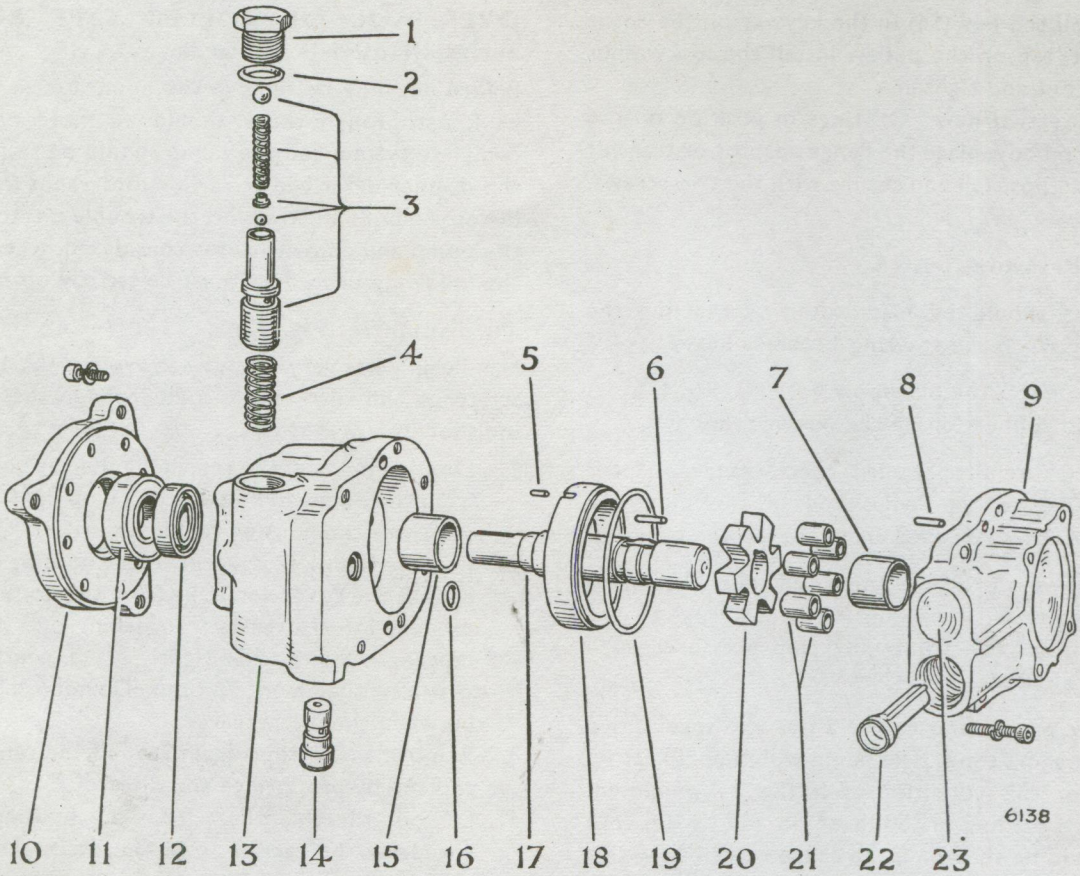

1. HEXAGON CLOSING PLUG
2. O-RING
3. MAIN FLOW VALVE AND RELIEF VALVE
4. FLOW VALVE RETURN SPRING
5. CAM RING INSERT STEADY PIN
6. ROLLER CARRIER DRIVING PIN
7. DRIVE SHAFT BUSH
8. DOWEL PIN
9. PUMP HOUSING COVER
10. ADJUSTABLE END PLATE
11. SEALED BALL BEARING
12. OIL SEAL
13. PUMP HOUSING
14. ORIFICE TUBE
15. DRIVE SHAFT BUSH
16. O-RING
17. DRIVING SHAFT
18. CAM RING INSERT
19. O-RING
20. ROLLER CARRIER
21. ROLLERS
22. VENTURI TUBE
23. BLANKING PLUG

Fig. 12. *Exploded view of roller type pump Series III models onwards*

Cleaning and Inspection

The pump is now divided into three sections. These should be washed in a suitable solvent together with all ancillary parts including the rollers, carrier, cam ring and valve unit. Blow out the pump sections thoroughly with compressed air and wipe all parts dry with a lint-free cloth.

Inspect the internal faces of the pump housing and cover for wear caused by the turning of the rollers and the carrier. Check the driving shaft surface, keyways and bushings for wear or scores and note any perceptible wear in the sealed bearing.

To check the cam ring, carrier and rollers, fit these into their respective locations in the pump housing. Using a feeler gauge and a straight-edge, check the end float of the carrier and rollers. If the end float exceeds 0·0025 in. (·06 mm.), new parts will be required.

The checking of the clearance between the carrier and the roller face of the cam ring is not necessary, since the rollers remain in contact with both items, while the pump is operating.

Make sure the valve unit and its chamber are clean and dry, then insert the valve into the chamber and check that it moves freely. A large ball is pressed into the bore of the valve unit. The setting of this ball determines the relief valve pressure. *This is set accurately at the factory, and should on no account be disturbed.*

To reassemble (Fig. 12)

The necessary new parts should be fitted in place of those worn or damaged. Ensure that all parts are clean and the working surfaces suitably lubricated.

1. Install a new oil seal to the pump housing. The lip of the oil seal must face towards the carrier chamber when fitted. A workshop press should be used to ensure the seal is fitted firmly and evenly into the bore.

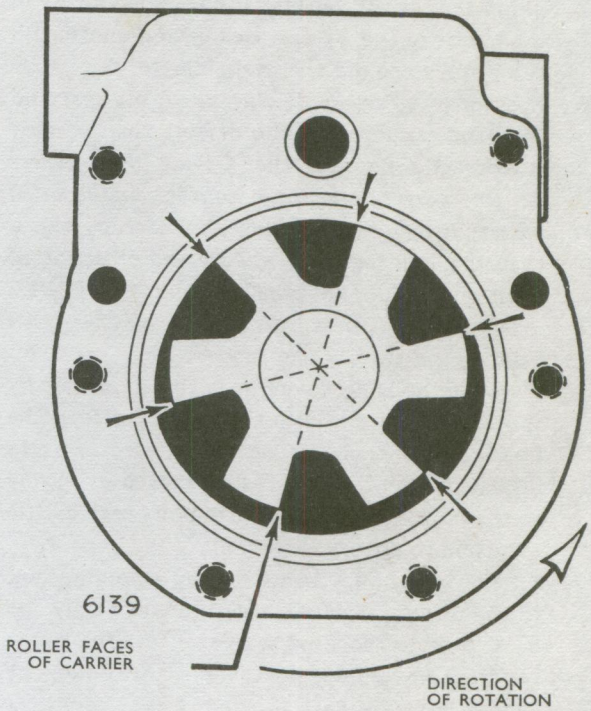

Fig. 13. *Installation of roller carrier to pump housing*

2. Clamp the pump housing lightly in a vice and insert the return spring into the valve chamber, followed by the valve unit. Fit a new O-ring to the hexagon closing plug and screw the plug firmly into the housing to retain the assembly.

3. Fit the driving shaft, sealed bearing and end plate to the pump housing. This should be fitted as an assembly with the shaft and bearing previously pressed into position in the end plate.

4. Correctly set the end plate to the punch marks and align the bolt holes. Fit the four bolts and spring washers to secure the end plate uniformly to the pump housing.
5. Position the housing in the vice with the carrier chamber upwards and fit the cam ring so that the slot in its edge engages the steady pin in the pump housing. Place a new O-ring in the recess of the by-pass orifice and another in the groove around the cam ring.
6. Position the carrier driving pin in its seat and slide the carrier onto the driving shaft so that it correctly engages the driving pin. *Unless extreme care is taken, the carrier may be fitted upside down.* After fitting the carrier, check that its roller faces are toward the direction of rotation and line up radially as shown in Fig. 13.
7. Insert the six rollers into their respective positions in the slots of the carrier.
8. Place the housing cover in position so that its spigot pins line up with the spigot holes in the housing, at the same time taking care to avoid displacing the O-rings. Fasten the cover firmly to the housing, tightening the bolts each a little at a time to ensure uniformity.
9. Fit the key, pulley, washers and retaining bolt to the driving shaft. Tighten the bolt firmly and bend over the locking washer. Test the pump for free movement by turning the pulley by hand.

FAULT FINDING

The Hydrosteer Direct-Coupled system has been designed to provide trouble-free service, but like any mechanical device or system, the units may become worn or maladjusted. As a result, the normal smooth operation of the system may be affected. The information given below is intended to help in quickly locating and correcting difficulties that may be encountered.

1. Loss of Power Assistance

A sequence for checking through the system to determine the cause of loss of power assistance is detailed, in the form of a fault-finding chart, at the end of this Section.

2. Binding

If binding or sticking is noticed when the steering wheel is turned, check the following items:—

(*a*) *Movement of the Manual Ball Pin.* The operating sleeve may be binding in the locating sleeve probably due to inadequate lubrication. These parts will have to be removed, freed and if necessary renewed.

(*b*) *Control Valve Spool.* Check the operation of the spool in the valve. If it is binding, inspect for burrs or damage and if necessary renew the control valve spool assembly and housing.

3. Excessive Free Play in the Steering

If excessive free play is noticed when steering, check the following items:—

(*a*) *Manual Ball Pin Cups.* Check for excessive clearance between the ball pin and ball cups, check for wear or faulty Belleville washers and replace as necessary. The ball cup adjustment should be screwed home to its limit and then screwed back one-quarter turn to provide the proper tension on the ball.

(*b*) *Loose Locating Sleeve.* If the locating sleeve is loose, remove the split pin at the ball pin end and tighten the end cover. Replace the split pins.

4. Heavy Steering

Heavy steering should not be confused with binding. Heavy steering is experienced over the whole travel of the front wheels while binding is normally only experienced over a portion of the front wheel travel. If the steering is heavy the following points should be checked:-

(*a*) *Low Pump Output.* Check the pump drive belt and renew if necessary. The belt tension may need adjustment, or, if it is suspected that the pump output pressure is low check the pump output pressure as previously explained. If the pressure is below 550 lb./sq. in. (39 kg./sq. cm.), check the pressure relief valve and spring and, if incorrect, strip the pump, examine and renew parts as necessary.

(*b*) *Power Cylinder Assembly.* Ensure that the ball valve, item (56) Fig. 6, is not being held off of its seating by the threaded end of the banjo bolt that secures the outlet pipe to the power cylinder, this applies only to Series I to IV models.

If the steering is still heavy after overhauling the pump, dismantle the power cylinder assembly and inspect the control valve spool and spool bore. Deep scoring or scratches will allow internal leaks and cause heavy steering. If the control valve assembly is in good condition the trouble is probably due to excessive leakage in the power cylinder. In this case the inner tube and piston ring may have to be renewed.

5. Noisy Operation

To locate the cause of noise in the system check the following items:—

(*a*) *Reservoir Oil Level.* Check the oil level in the pump reservoir. If the oil is low, air is probably being drawn into the system by the pump. Top up with the recommended oil, see "Section P" and under "Maintenance" earlier in this Section.

(*b*) *Pump Drive Belt Tension.* Check the pump belt tension and adjust as necessary. If the belt is too tight pump noise may result, if it is too loose it may squeal.

(*c*) *Pump Parts.* The pump assembly or certain parts of it may be worn. Dismantle the pump and renew as necessary. Check that the hose feeding the pump from the reservoir is not blocked. Blockage in this line will cause air to be drawn into the system.

(*d*) *Creaking on Full Lock.* Check setting of steering box stops (see page 18). It is important to ensure that the power cylinder control spool is in its neutral position when the steering is on either full lock. This is ensured when the steering box stops are correctly set.

6. Steering Chatter

Steering chatter may be caused by one of the following items:—

(*a*) *Piston Rod End Float.* The anchorage of the piston rod may require adjustment or renewal of worn parts.

(*b*) *Anchor Bracket.* Check that the anchor bracket is properly secured to the frame member of the vehicle.

7. Oil Leaks (see Fig. 6)

The possible places where oil can leak from the power cylinder are:—

1. *Oil feed and return pipe banjo unions*
   Make sure that union bolts are not "bottoming" in the threads into which they screw. Ensure that banjo union faces are parallel and that joint rings and their abutment faces are in good condition. Tighten the banjo bolts to the torque given in the "General Data Section".
2. *Piston rod bearing gland seal*
   A worn or defective piston rod bearing seal (31) will allow oil leakage. Wear of this seal or the piston rod, is caused by dirt being trapped between the seal and piston rod. The latest bearing nut (36) and scraper seal (37) should be fitted if a bearing nut (C) is encountered. Early type bearings (D) and sealing arrangement should be replaced by the latter arrangement shown in the central illustration (see Fig. 6).
3. *Defective or badly fitting "O" rings*
   Leakage from one or more "O" rings will appear as follows (see Fig. 6).

"O" ring annotation number	*Place at which leakage will take place*
32, 16 in Fig. 16	With latest bearing (30) out of the scraper seal (37). With early bearing (D) slight leak along threads into which bearing is screwed.
19, 10 in Fig. 16	Out of small drain hole in the opposite side to the banjo union attachment positions.
18, 9 in Fig. 16	As 19.
14 and 15, 33 in Fig. 16	Out of ball pin (6) seal cover.

POWER ASSISTED STEERING — FAULT FINDING CHART

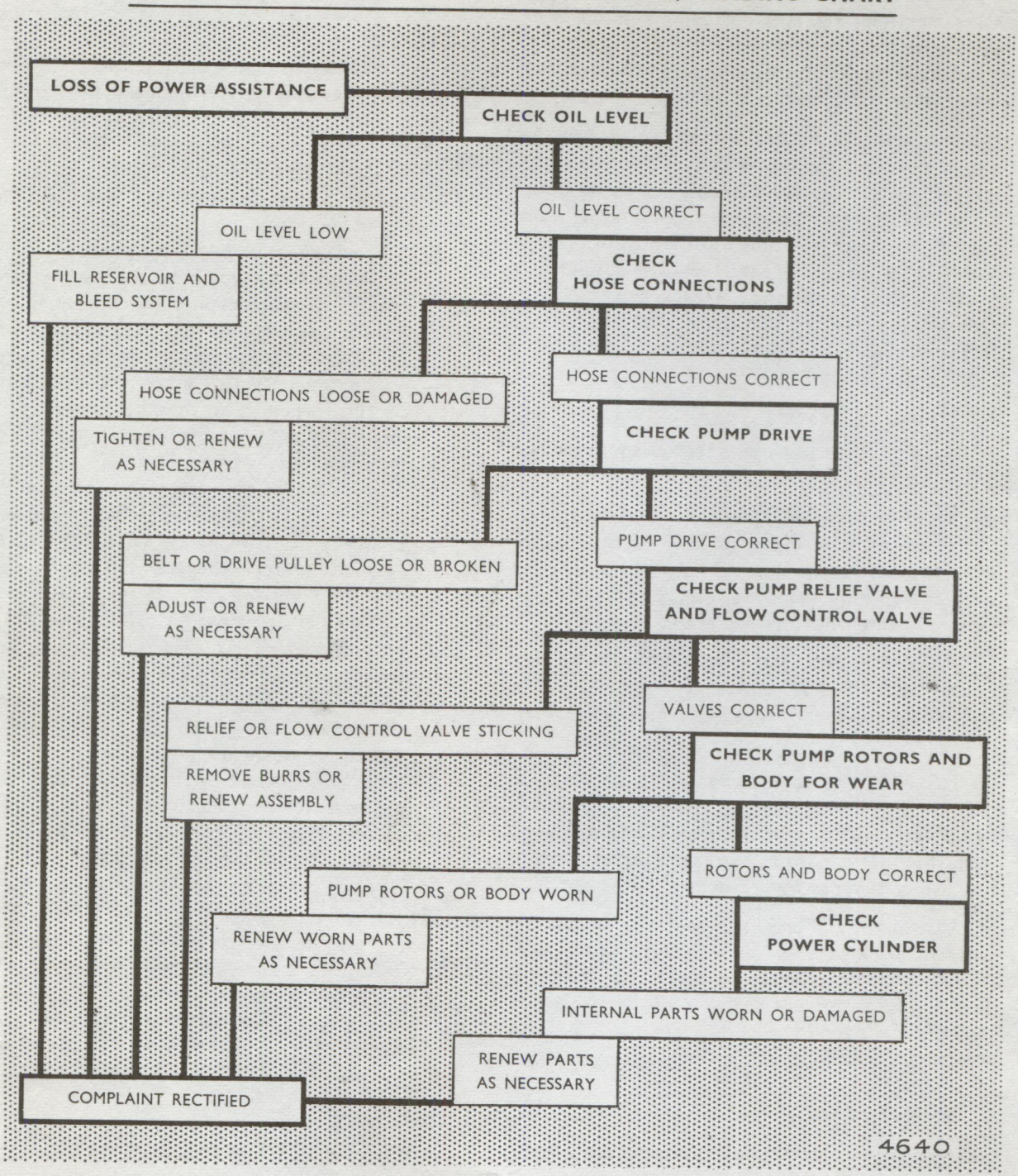

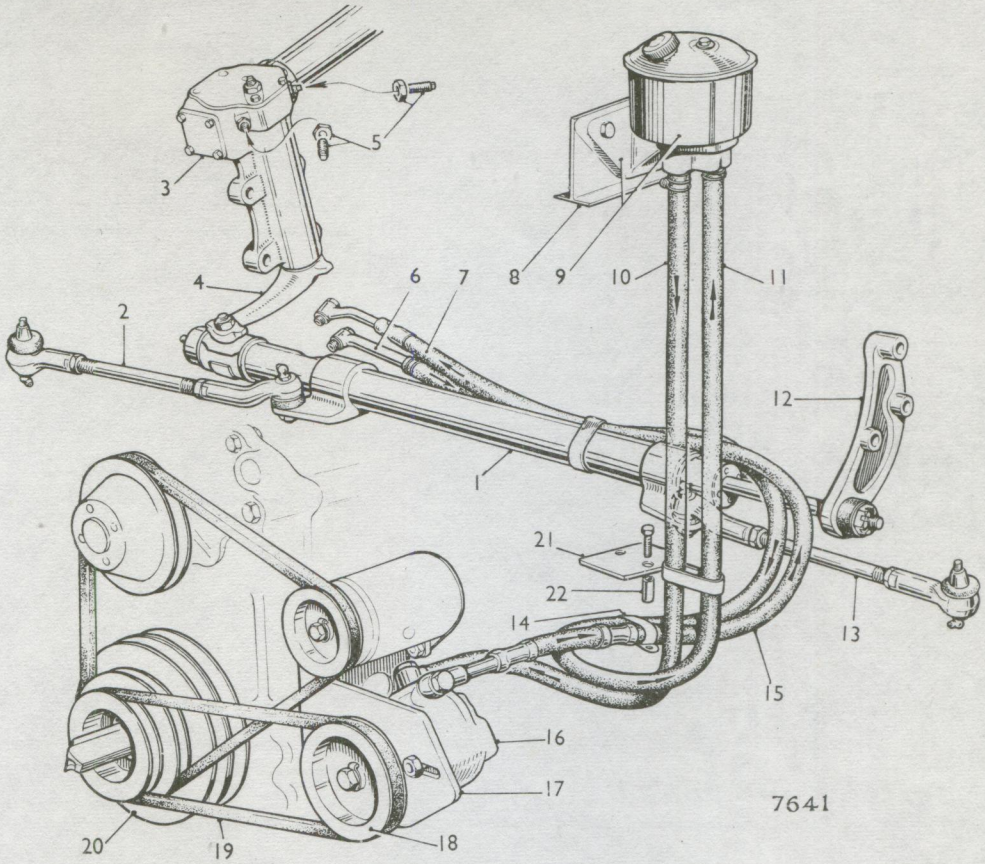

Fig. 14. *General layout of power-assisted steering—Series V models onwards*

1. POWER CYLINDER
2 and 13. OUTER TRACK RODS
3. STEERING UNITS
4. SWING LEVER
5. ROCKER SHAFT STOPS AND LOCKNUTS
6 and 11. RETURN PIPE
7, 10 and 15. DELIVERY PIPE
8. RESERVOIR BRACKET
9. RESERVOIR
12. SUPPORT BRACKET
14. HOSE CLIP
16. PUMP
17. PUMP BRACKET
18. PUMP PULLEY
19. PUMP DRIVE BELT
20. CRANKSHAFT PULLEY
21. HEAT SHIELD
22. DISTANCE PIECES

SERIES V MODELS ONWARDS AND IMPERIAL

Power-assisted steering is fitted as original equipment to Series V models onwards and the main differences are as follows:—

(i) Castor angle has been changed and reference must be made to the "General Data Section". The stub axle carriers and steering arms are not interchangeable with earlier models.

(ii) Power cylinder is now of the non-reactive type and whilst it is very similar to the earlier unit the following changes must be noted.

(*a*) For identification purposes a dab of blue paint has been applied to the ball pin greaser end, it is not interchangeable with earlier models.

(*b*) The supply and return ports are now reversed, the supply port is nearer to the ball pin as shown in Fig. 16.

(*c*) The relief valve between the supply and return ports is no longer fitted.

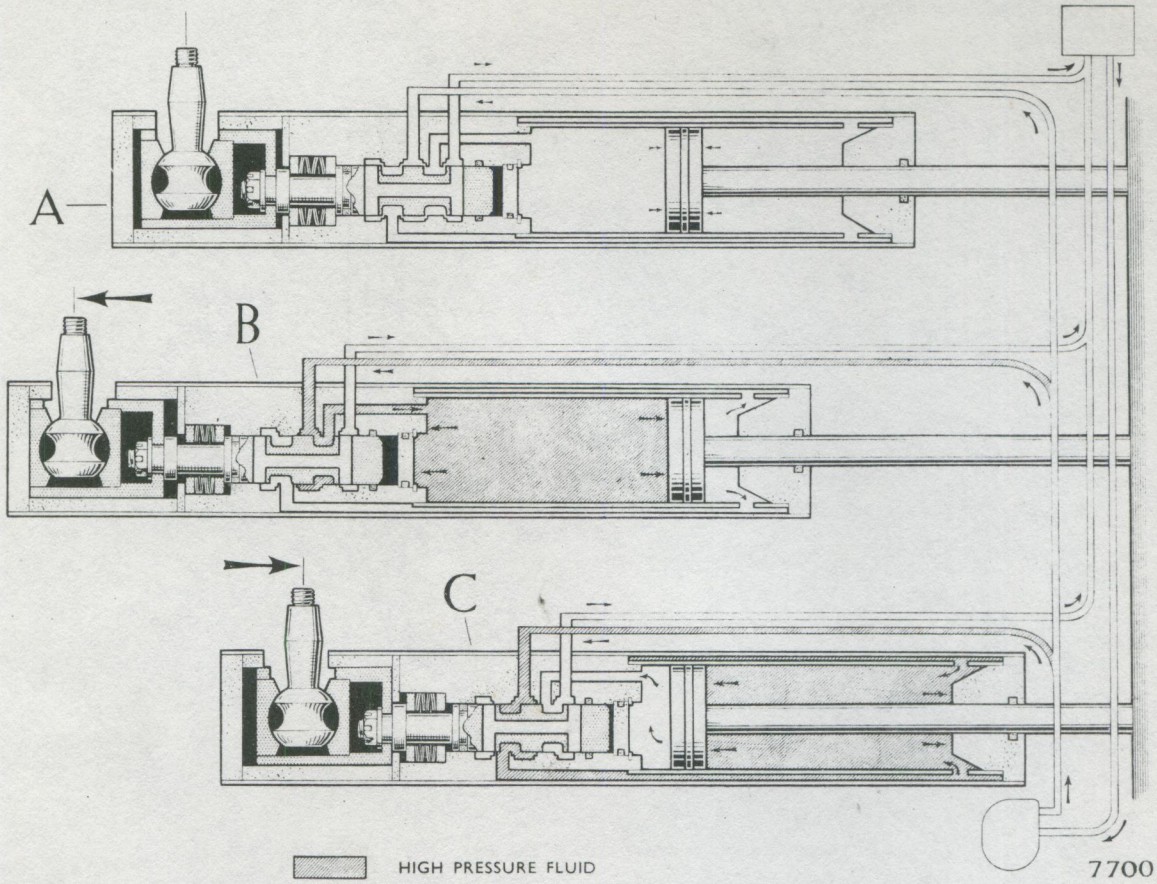

Fig. 15. *Operation of the power cylinder—Series V models onwards*

A NORMALLY THE SPOOL VALVE IS IN THE CENTRAL POSITION AS SHOWN IN THE TOP VIEW, THUS OIL FROM THE PUMP WILL PASS ACROSS THE SPOOL VALVE TO THE RETURN PORT WITHOUT GIVING STEERING ASSISTANCE.

B WHEN THE SPOOL VALVE IS MOVED TO THE LEFT AS SHOWN IN THE CENTRE VIEW, OIL FROM THE PUMP NO LONGER HAS ANY PASSAGE TO THE RETURN PORT BUT PASSES THROUGH DRILLINGS IN THE VALVE BODY TO THE LEFT-HAND SIDE OF THE PISTON WHERE PRESSURE IS BUILT UP TO ASSIST THE STEERING WHILE THE RIGHT-HAND SIDE OF THE PISTON REMAINS OPEN TO THE RESERVOIR.

C WHEN THE SPOOL VALVE IS MOVED TO THE RIGHT AS SHOWN IN THE BOTTOM VIEW, THE SEQUENCE IS SIMILAR TO THAT DESCRIBED IN THE PREVIOUS PARAGRAPH BUT THE OIL IS DIRECTED THROUGH DRILLINGS TO THE ANNULAR SPACE BETWEEN THE OUTER AND INNER TUBES TO THE RIGHT-HAND SIDE OF THE PISTON WHERE PRESSURE IS BUILT UP AND PROVIDES STEERING ASSISTANCE IN THE OPPOSITE DIRECTION WHILE THE LEFT-HAND SIDE OF THE PISTON REMAINS OPEN TO THE RESERVOIR.

IMMEDIATELY SIDEWAYS MOVEMENT OF THE SPOOL VALVE CEASES, THE SPOOL VALVE RETURNS TO ITS CENTRAL POSITION AS SHOWN IN THE TOP VIEW DUE TO THE LOADING OF THE BELLEVILLE WASHERS, THUS THE PRESSURE DIFFERENCE ACROSS THE PISTON BECOMES EQUALISED AS IN "A".

(*d*) Being of the non-reactive type the "spring chamber" of the spool valve is no longer connected to the pressurized side of the piston and the spring has been replaced by a suitably loaded belleville washer pack as shown in Fig. 16 and the operation is described in Fig. 15.

(*e*) The belleville washers loading the ball pin are now fitted inside the outer ball cup holder.

RESERVOIR

Reference must be made to "Maintenance—Reservoir Oil Level and Reservoir Filter Element" described earlier in this Section.

OIL PUMP

Reference must be made to "Roller type Oil Pump Assembly" described earlier in this Section.

Pump Driving Belt Tension

Reference must be made to "Maintenance—Adjustments" described earlier in this Section.

POWER CYLINDER

The non-reactive type of power cylinder is similar to that described earlier in this Section but any reference to a valve spool spring must be read to mean a belleville washer pack, the spring chamber of the spool valve is no longer connected to the pressurized side of the piston and the pressure relief valve situated between the supply and return ports is no longer fitted.

To remove and refit

The power cylinder is removed and refitted as described earlier in this Section but the following additional point must be noted.

The supply pipe, identified by its crimped on end, is fitted to the port marked "F" nearest to the ball pin.

Draining the system

To refill and bleed the system

Testing power cylinder for leaks after reassembly

Fault finding

The recommended method(s) to effect any of the above operations are described earlier in this Section.

To dismantle (Fig. 16)

1. Remove the two steel and rubber washers from the piston rod by detaching the castellated nut.

2. Remove the rubber dust cover from the ball pin by releasing the spring clip.

3. Withdraw and discard the two split pins, one from each end of the outer tube.

4. Remove the end cover and nipple assembly from the outer tube using Churchill Tool No. RG.271.

5. Slacken off the ball cup holder inside the operating sleeve HALF A TURN by removing the locking strip and using Churchill Tool No. RG.270.

6. Remove the two anti-roll balls through the access holes in the outer tube and locating sleeve by sliding the latter outwards, a probe through the outer tube access holes will facilitate this operation; after removal the locating sleeve is returned to its original position.

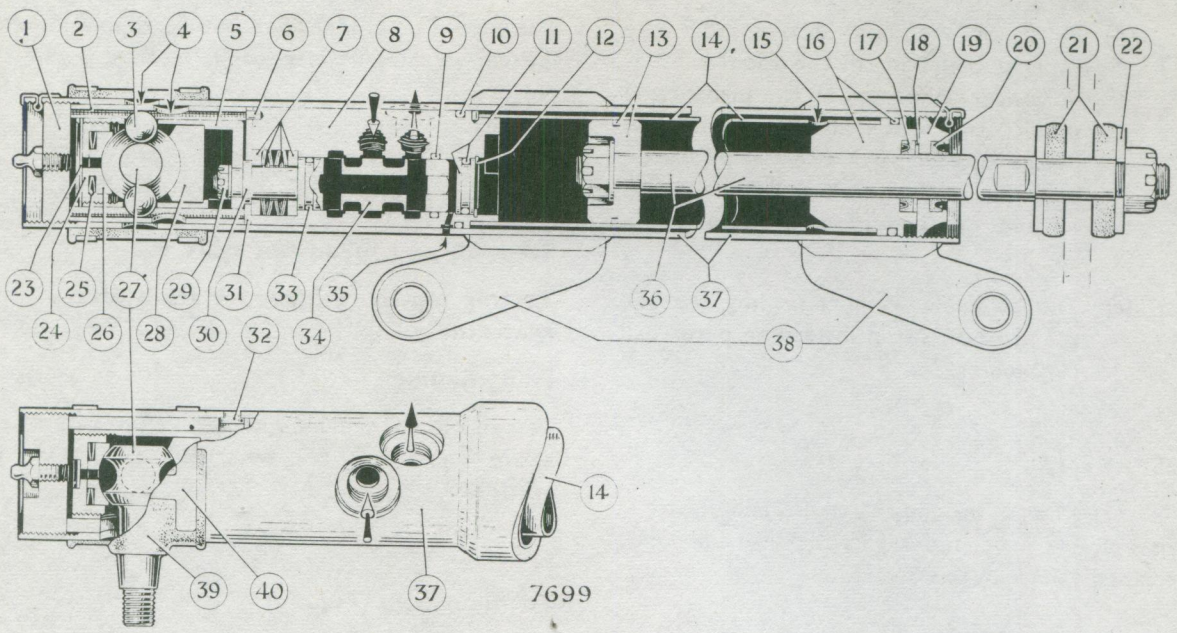

Fig. 16. *Longitudinal cross section view of the power cylinder*

1. END COVER AND NIPPLE ASSEMBLY
2. LOCATING SLEEVE
3. ANTI-ROLL BALLS
4. ACCESS HOLES FOR ANTI-ROLL BALLS
5. OPERATING SLEEVE
6. LOCATING PIN
7. THRUST DISCS AND BELLEVILLE WASHERS
8. VALVE BODY
9. SEALING RING
10. SEALING RING
11. END COVER AND SEALING RING
12. CIRCLIP
13. PISTON RING AND PISTON
14. INNER TUBE
15. TRANSFER HOLE
16. PISTON ROD BEARING AND SEAL
17. LIP SEAL AND SPREADER
18. VELLUMOID WASHER
19. SCRAPER HOUSING
20. SCRAPER
21. RUBBER WASHERS
22. STEEL WASHER
23. LOCKING STRIP
24. BALL CUP HOLDER
25. BELLEVILLE WASHERS
26. OUTER BALL CUP
27. BALL PIN
28. INNER BALL CUP
29. CASTELLATED NUT
30. COLLAR
31. SPACER
32. LOCATING PIP
33. SEALING RING
34. SPOOL VALVE
35. VENT HOLE
36. PISTON ROD
37. OUTER TUBE
38. TAKE-OFF LUGS
39. RUBBER DUST COVER
40. SPRING CLIP

7. Remove the two belleville washers and outer ball cup from the operating sleeve by withdrawing the ball cup holder using Churchill Tool No. RG.270; the ball pin can now be withdrawn through the holes in the outer tubing and locating sleeve, the latter is then withdrawn through the end of the outer tubing.

8. Examine the external end of the piston rod for burrs and roughness, particularly at the two spanner flats and clean up as necessary.

9. Withdraw the scraper housing and vellumoid washer beneath, from the piston rod end of the outer tube using Churchill Tool No. RG.270; prise the scraper from the housing when it is seen to be well worn.

10. Eject the inner tube assembly from the outer tube by resting a wooden block on the inner ball cup and applying light mallet blows.

11. Withdraw the valve spool assembly from the valve body by gripping the operating sleeve.

12. Remove the inner ball cup from the operating sleeve by tapping the latter on a hard wooden block or by applying a hooked tool in the centre of the ball seat.

13. Withdraw the operating sleeve, collar, spacer, thrust discs and belleville washers from the valve spool by discarding the split pin and removing the castellated nut and washer; this operation is only effected when the belleville washers need renewing, remove the seal from the valve spool.

14. Withdraw the piston, rod and piston rod bearing from the inner tube and remove the piston rod bearing from the piston rod.

15. When the seals are seen to be well worn, remove the ring seal from outside the piston rod bearing and prise the lip seal from inside exercising care not to damage the seal spreader beneath the latter.

16. Remove the piston ring from the piston and the piston from the rod by discarding the split pin and removing the castellated nut and washer, this operation is only effected when any component needs renewing.

17. Detach the valve body from the inner tube, it is a light press fit and force will not be necessary.

18. Withdraw the end cover and seal from the valve body by removing the circlip, remove the seal from the end cover and the seal inside the valve body when they are seen to be well worn.

To reassemble (Fig. 16)

1. When either of the locating pins in the valve body or the locating pip in the outer tube are loose they must be renewed.

2. Lubricate the valve spool and insert into the valve body; with light finger pressure the spool should pass freely through the body.

3. Ensure that the vent hole in the valve body, adjacent to the outer sealing ring groove, is clear; fit new seals to the valve body and end cover, fit the latter to the valve body and secure with the circlip.

4. Press the inner tube onto the valve body so the slot and locating pin align with one another, they are a light press fit and force will not be necessary.

5. Fit the piston to the piston rod, flat face first and tighten the castellated nut to a torque of 35 to 45 lbs. ft. (48 to 6·2 kg.m.) and lock with a new split pin, DO NOT OVER-TIGHTEN as this will swell the piston and cause it to bind within the inner tube; fit the piston ring to the piston.

6. Fit the spreader into the seal and press both, spreader side first, into the piston rod bearing; fit the seal into the groove on the outside of the bearing.

7. Fit the seal protector, Churchill Tool No. RG.309, to the external end of the piston rod and slide the piston rod bearing, chamfered end first, over the Churchill tool onto the piston rod.

8. Coat one face of the vellumoid washer with grease and feed, greased face first, over the Churchill tool onto the piston rod and remove the protector tool.

9. Fit the piston, rod and bearing to the inner tube by compressing the piston ring; the piston rod bearing is a light press fit in the inner tube and force will not be necessary.

10. Assemble the eight belleville washers into four parallel packs of two each and place the four packs alternately together with their raised outer and inner edges in contact with one another, so a cross-section taken through the top and bottom would show an "M" and "W" respectively.

11. Fit an oil seal to the groove in the spool valve.

12. Feed the first thrust disc onto the stem of the spool valve followed by the belleville washers and second thrust disc.

13. Fit the collar, flanged end first, to the shank of the spool valve and the spacer to the collar; follow with the operating sleeve and secure with a castellated nut, tighten the castellated nut until it bottoms, and lock with a split pin.

14. Lubricate the spool valve and feed into the valve body so the spacer locates the pin in the valve body. KEEP THE VALVE END UP-WARDS TO PREVENT THE SPOOL VALVE FALLING OUT.

15. Feed the inner ball cup, flat face first, into the operating sleeve.

16. Ensure that the vent hole in the outer tube, adjacent to the take-off lug at the ball pin end, is clear; also that the internal threading at the piston rod end is clean and has no burrs, grease the thread to ease the passage of the valve body and piston rod bearing seals.

17. Feed the assembled inner tube into the outer, valve body end first and see the valve body ports align radially with those in the outer tube but not quite longitudinally as this is effected during a later operation.

18. Press the scraper into the scraper housing, flat face first, until its outer edge is fully located behind the lip of the scraper housing; the purpose of the scraper is to clean the piston rod before it enters the piston rod bearing.

19. Fit the protector tool, Churchill Tool No. RG.309, to the threaded end of the piston rod and slide the scraper housing, flat face first, onto the piston rod and remove the protector tool; screw the scraper housing into the outer tubing to such a depth as to ensure the longi-tudinal alignment of the valve body ports using the Churchill Tool No. RG.270.

20. Feed the locating sleeve, slotted end first, into the outer tube and over the operating sleeve, until the slot registers with the locating pip in the outer tube.

21. Assemble the two belleville washers so their raised centres are together and locate on the spigoted face of the outer ball cup with a smear of Shell Retinax A Grease; using more grease locate both, belleville washers first, within the recessed centre of the ball cup holder.

22. Apply a liberal coating of Shell Retinax Grease to the ball pin, particularly to the groove; feed the ball pin into the valve body through the large holes in the outer tube, locating and operating sleeves, hold in position by screwing the outer ball cup and holder assembly into the locating sleeve, but do not fully tighten until a later operation.

23. Align the two sets of holes in the locating sleeve and outer tube by withdrawing the locating sleeve a short distance; feed the two anti-roll balls through the holes so aligned until they locate the groove in the ball pin and return the locating sleeve to its normal position.

24. Adjust the pressure on the ball pin by screwing up the ball cup holder to its fullest extent and then slackening it off half a turn using Churchill Tool No. RG.270; lock the ball cup holder with the steel locking strip, it may be necessary to turn the ball cup holder a short distance to align its groove with the two holes in the operating sleeve.

25. Fit the end cover and nipple assembly to the outer tube and tighten down solid using Churchill Tool No. RG.271; lock this end cover and the scraper housing at the piston rod end by drilling the outer tube $\frac{3}{64}$ in. (3·5 mm.) through the slots and fit the split pins.

26. Fit the rubber dust cover over the ball pin and secure with the spring clip.

27. Fit the metal washer having the large hole to the piston rod followed by the two rubber washers and the second washer; run on the castellated nut.

SERIES I

BRAKES

For Series II and III models see Section K (2)

CONTENTS

(25 PAGES)

	Page
GENERAL DESCRIPTION	2
MAINTENANCE	4
DATA	Front of book
BRAKE ADJUSTMENT	5
BLEEDING THE HYDRAULIC SYSTEM	6
BRAKE OVERHAUL	
—General instructions	7
MASTER CYLINDER	
—To remove and refit	8
—To dismantle and reassemble	9
WHEEL CYLINDERS	
—Front—To remove and refit	9
—Rear—To remove and refit	9
—To dismantle and reassemble	10
FLEXIBLE HOSES	
—To remove and refit	10
BRAKE SHOES	
—Front—To remove and refit	11
—Rear—To remove and refit	12
—Centralising front brake shoes	12
—Steady posts—To adjust	13
BACK PLATE	
—Front—To remove and refit	14
—Rear—To remove and refit	14
SERVO UNIT	
—Description	16
—Operating principles	17
—To remove	20
—To dismantle	20
—To reassemble	22
—To refit	24

BRAKES

DESCRIPTION

Girling servo-assisted hydraulic brakes are fitted. This system employs two trailing shoes on the front brakes, and leading and trailing shoes on the rear brakes. The front brakes are self-adjusting.

A vacuum-operated booster ensures light pedal pressures.

FRONT BRAKES (See Fig. 1A)

The front brakes are self-adjusting and have two trailing shoes which minimise braking variations due to changes in friction characteristics and ensure a good balance under all braking conditions.

Brake Shoes and Springs

The front brake shoes are operated by two single acting wheel cylinders situated diametrically opposite to each other and interconnected by a bridge pipe.

Each brake shoe is pivoted on the base of one wheel cylinder and expanded by the piston of the other, with the shoe linings making trailing contact with the drum.

Two pull-off springs are fitted adjacent to the fulcrum points of the shoes. The longer ends are connected to a peg on the back plate and the shorter ends hooked round a peg on the shoes near the abutment ends. They are positioned between the shoes and the back plate.

Stabilisers (See Fig. 1B)

Stabilisers situated in the centre of the brake shoe webs overcome any tendency for the shoes to be shaken away from the drums and retain the shoes close to the drums as lining wear takes place. The front brake shoes are therefore self-adjusting.

The stabiliser consists of a slotted pin supporting a pair of spring-loaded friction discs situated either side of the brake shoe web. A slot in the base of the stabiliser pin locates on the head of a steady post anchored to the brake back plate. The slot in the stabiliser pin provides for a clearance of ·014″—·019″ (·36—·48 mm.) between it and the steady post. Thus, the brake shoes are permitted to retract from the drums by this amount only, the friction discs

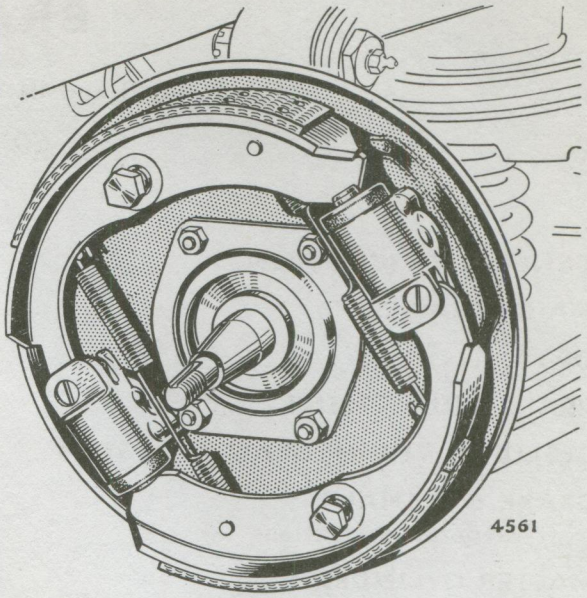

Fig. 1A. *Front brake assembly—right-hand side illustrated*

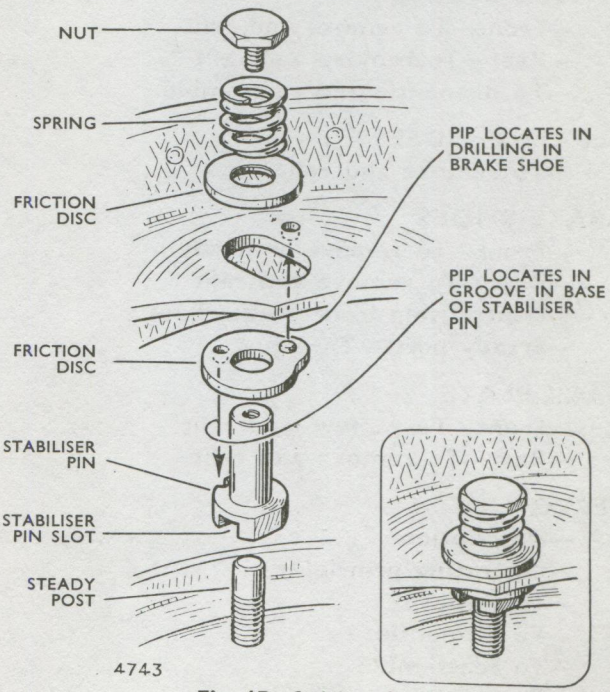

Fig. 1B. *Stabiliser details*

preventing the pull-off springs from having any further effect.

The slot in the stabiliser pin must be maintained at right angles to the direction of brake shoe movement. To achieve this the lower friction disc (underneath the brake shoe web) is equipped with two "pips": one of these locates in a hole in the brake shoe web and the other in a groove in the base of the stabiliser pin. The arrangement is clearly shown in the illustration.

The front wheel cylinders (see Fig. 8) embody a light spring to maintain the pistons in contact with the brake shoe ends when the brakes are "off".

This ensures that no clearance can exist between the pistons and brake shoes when the shoes move towards the drums to compensate for lining wear.

Wheel Cylinders (Fig. 8)

Each wheel cylinder consists of a cast-iron body (8) containing a spring base (10), a spring (11), a seal support (12), a seal (13), a steel piston (14) and a rubber dust cover (15). The base of the body carries a slot, through which a pivot pin (9) is bolted to the back plate, and acts as an abutment for the ends of the shoes.

A bleed screw (2) incorporated in one wheel cylinder presses a steel ball firmly on a valve aperture in the cylinder and a rubber cap is fitted to exclude dust, etc. The screw is released to bleed the hydraulic system.

REAR BRAKES (See Figs. 2 and 9)

The rear brakes are of the leading and trailing shoe type.

Brake Shoes and Springs

The rear brake shoes are not fixed but allowed to slide and centralise during the braking operation.

The shoes are operated by a hydraulic wheel cylinder (4, Fig. 9) and adjustment for lining wear is by a wedge type mechanical adjuster (7, 8, 9).

The cylinder and the adjuster are situated opposite one another on the inside of the back plate, with

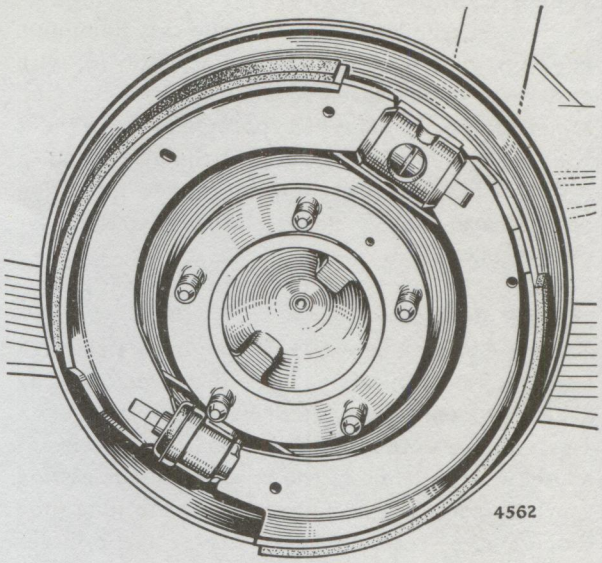

Fig. 2. *Rear brake assembly—right-hand side illustrated*

the ends of the shoes locating in the wheel cylinder piston and body (4 and 6) and adjuster links (8, 12) respectively.

Each shoe rests on an adjustable steady post (14) fitted with a felt bush (13) to retain lubricant.

The shoes are held in position by two pull-off springs (10, 11).

Both springs are situated between the shoe webs and the back plate.

Adjuster (Fig. 9)

The adjuster has a light alloy housing (7) which is spigoted and bolted firmly to the inside of the back plate. The housing carries two opposed steel links (8, 12), the outer ends slotted to take the shoes, and the inclined inner faces bearing on inclined faces of the hardened steel wedge (9) (the axis of which is at right angles to the links).

The wedge has a finely threaded spindle with a square end which projects on the outside of the back plate. By rotating the wedge in a clockwise direction the links are forced apart and the fulcrum of the brake shoes expanded.

Wheel Cylinders (Fig. 9)

Each wheel cylinder consists of a die-cast aluminium body (4) containing seal (5) and a piston (6) with dust cover (17), secured to the body by a clip (16). A bleed screw (3) is also incorporated in the cylinder body with a rubber dust cap over the nipple end.
A locking plate holds the wheel cylinder in position on the backplate. It allows the body to slide for centralising purposes.

HAND BRAKE

The hand brake operates the rear brakes through a separate mechanical linkage, which is actuated by a lever situated beside the driver's seat.
The brakes are operated by a lever (Fig. 9, Item 18) housed on the front of the wheel cylinder casting which operates the leading shoe. The trailing shoe is operated by reaction through the wheel cylinder body, which slides in the back plate.

HYDRAULIC SYSTEM

The brakes on all four wheels are hydraulically operated and assisted by a vacuum servo unit.
The pressure generated in the master cylinder by application of the brake foot pedal is built up by the servo unit and transmitted with equal force to all wheel cylinders simultaneously.

MAINTENANCE

(For Brake Fluid see Section P)

Maintenance and lubrication should be carried out at the intervals laid down in the Lubrication and Maintenance Chart contained in the Owner's Handbook.

Situated on the front of the scuttle, the brake fluid supply tank is integral with the master cylinder. The fluid level should not be allowed to fall more than $\frac{1}{2}$" (12 mm.) below the top of the supply tank.

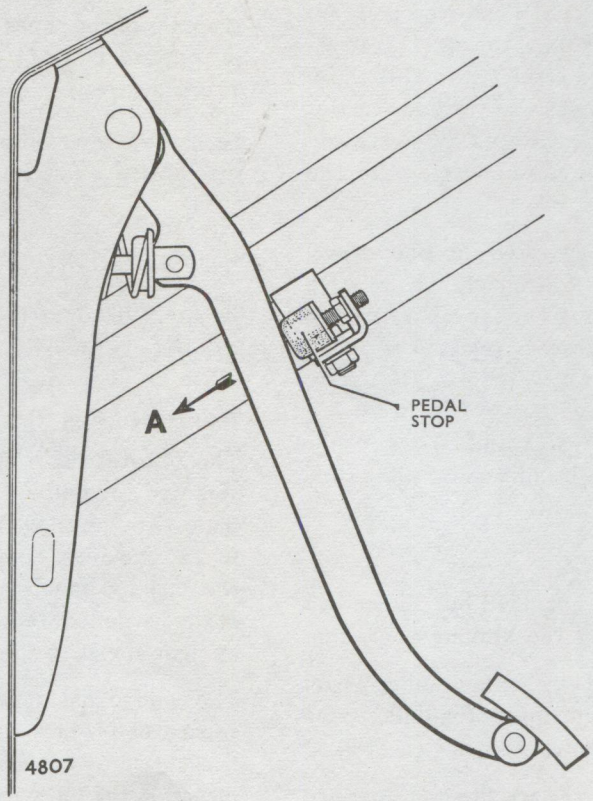

Fig. 3. *Brake pedal arrangement, showing pedal stop*

If the fluid level tends to fall rapidly, this may indicate the existence of a leak in the system and an immediate investigation should be carried out so that the cause can be rectified.

A lubricator is provided on the handbrake cable.

It is advisable occasionally to check for tightness the brake back plate mounting bolts and hydraulic and servo pipe unions. It is important to avoid over-tightening unions, joints, etc., or these may be damaged, resulting in leakage.

PEDAL STOPS

These consist of adjustable rubber buffers fitted one into each end of a bracket clamped to the steering column. The pedals rest against the buffers when released.

To adjust Pedal Stops (See Fig. 3)

1. Screw back the rubber buffer to allow the pedal to return against its stop in the master cylinder. It is advisable to lift the pedal towards the rubber buffer to ensure that the master cylinder push rod is right back.
2. Screw down the rubber buffer so that it touches the pedal without compressing the rubber.
3. Screw down the buffer one complete turn in the direction of the arrow "A".
4. Secure with the locknut.
5. Pedal free movement should not exceed $\frac{1}{4}$" (6 mm.) and it is essential that some clearance remains when this adjustment has been effected. Check that clearance exists after locking up.

BRAKE ADJUSTMENT

Front

The front wheel brakes are so designed that no adjustment for lining wear is necessary or provided for, as this automatically takes place when the foot brake is operated.

Rear (See Fig. 4)

Place chocks under the front wheels. Release the hand brake and raise the rear of the car.

Turn the square-headed adjuster, situated at the rear of the back plate, in a clockwise direction until solid resistance is felt. Slacken back the adjuster until the brake drum rotates freely (usually two clicks). Spin the wheel and apply the brakes hard to centralise the shoes in the drum and recheck adjustment. Repeat for the other rear wheel.
Immediately after fitting replacement shoes it is advisable to slacken the adjuster one further click

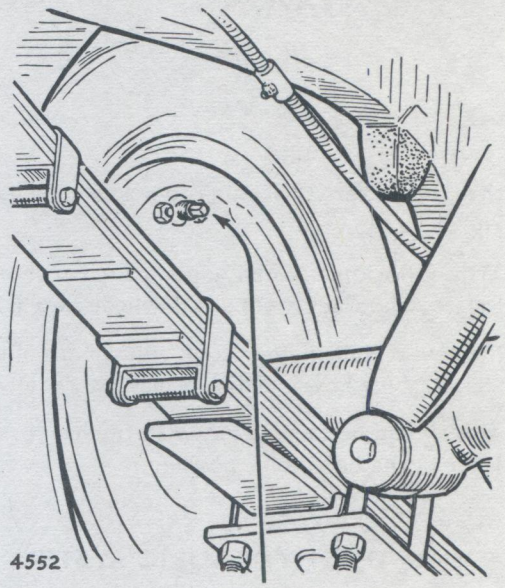

Fig. 4. *Rear brake adjustment*

to allow for possible lining expansion, reverting to normal adjustment afterwards.

Hand Brake

Adjustment of the rear brakes will automatically adjust the hand brake. If, however, it is found that, with the rear brakes in correct adjustment, excessive hand brake free travel is obtained, adjust the hand brake as follows:—

Jack up both rear wheels and lock shoes by means of the adjusters. With the hand brake off, adjust the cable length so that the slack is taken out of the linkage. Adjustment is carried out by rotating the screwed sleeve at the front end of the inner cable (immediately to the rear of the hand brake lever—under

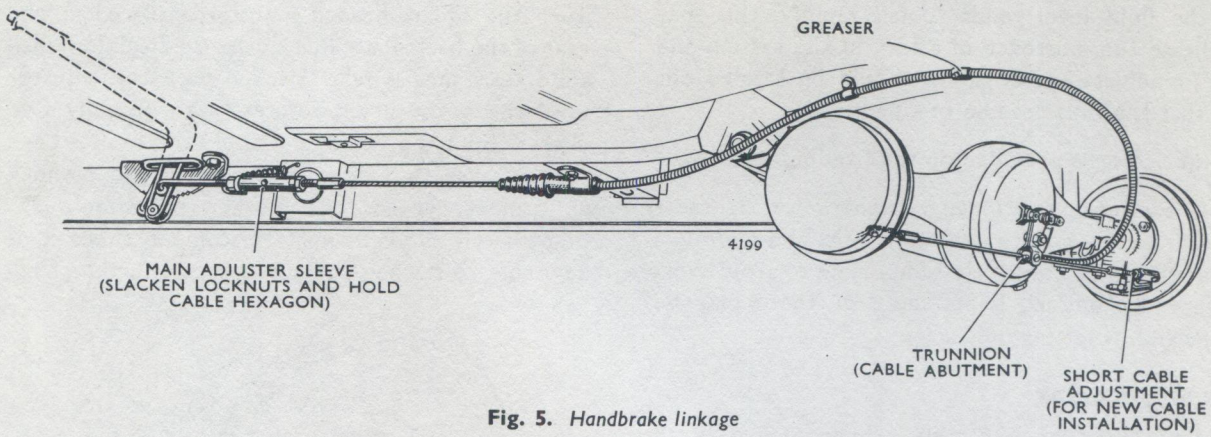

Fig. 5. *Handbrake linkage*

the car) after slackening its locknuts (see Fig. 5).

Tighten locknuts when adjustment is correct. Release shoe adjusters until wheels are free.

If a new cable is being fitted, adjustment of the short cable shown in Fig. 5 may be required.

This should be carried out with the handbrake lever in the fully "off" position.

BLEEDING THE HYDRAULIC SYSTEM

"Bleeding" (expelling air) the hydraulic system is not a routine maintenance operation, and should only be necessary when a portion of the hydraulic system (including the vacuum servo unit) has been disconnected or if the level of the brake fluid has been allowed to fall so low that air has entered the master cylinder. Proceed as follows:—

With the hydraulic connections secure and the supply tank topped up with fluid remove the rubber cap from the left-hand rear wheel cylinder bleed nipple and fit the bleed tube over the bleed nipple, immersing the free end of the tube in a clean jar containing a little brake fluid.

Unscrew the bleed nipple three quarters of a turn, operate the brake pedal with full stroke allowing the return stroke to be as quick as possible, any check to the return of the pedal or master cylinder plunger, will prevent effective bleeding. Repeat the applications until the fluid entering the jar is completely free of air bubbles.

The front brake bleed nipples operate against a small ball for sealing purposes. Should a front nipple be removed, care must be taken to ensure that the ball is replaced before the nipple is refitted.

This process must now be repeated for each bleed screw at each of the three remaining back plates, finishing at the wheel nearest the master cylinder. *Always keep a careful check on the supply tank during bleeding since it is most important that a full level is maintained.* Should air reach the master cylinder from the supply tank the whole of the bleeding operation must be repeated.

If the vacuum servo unit has been disconnected or removed, the column of air expelled at the wheel cylinder bleed screws will be in excess of that normally encountered.

It is essential that an adequate supply of clean brake fluid is maintained in the supply tank during the whole operation.

After bleeding in the normal manner, start the engine and make a number of hard brake applications, after which the system can be re-bled with advantage to clear any pockets of air which may have been retained in the internal passages of the servo unit.

After bleeding, top up the supply tank to its correct level of $\frac{1}{2}$" (12 mm.) below the filter neck.

Never use fluid that has been bled from a brake system for topping up the supply tank, since this brake fluid may be to some extent aerated. Great cleanliness is essential when dealing with any part of the hydraulic system, and especially so where the brake fluid is concerned. Dirty fluid must never be added to the system.

BRAKE OVERHAUL—GENERAL INSTRUCTIONS

Cleanliness

The importance of absolute cleanliness when dealing with hydraulic parts such as the master cylinder and operating cylinders cannot be over-stressed. Clean off road dirt and grease before removing the units from their mountings. Dismantle on a clean bench and do not handle internal parts with dirty or greasy hands. Never use petrol, paraffin, trichlorethylene or other similar cleaning agents to wash the unit or internal components since this will have the tendency to destroy rubber parts. Place the parts in a tin containing brake fluid and, after soaking, wipe clean with a clean lintless rag. Similarly, brake linings must never be touched with greasy hands or their efficiency may be permanently impaired.

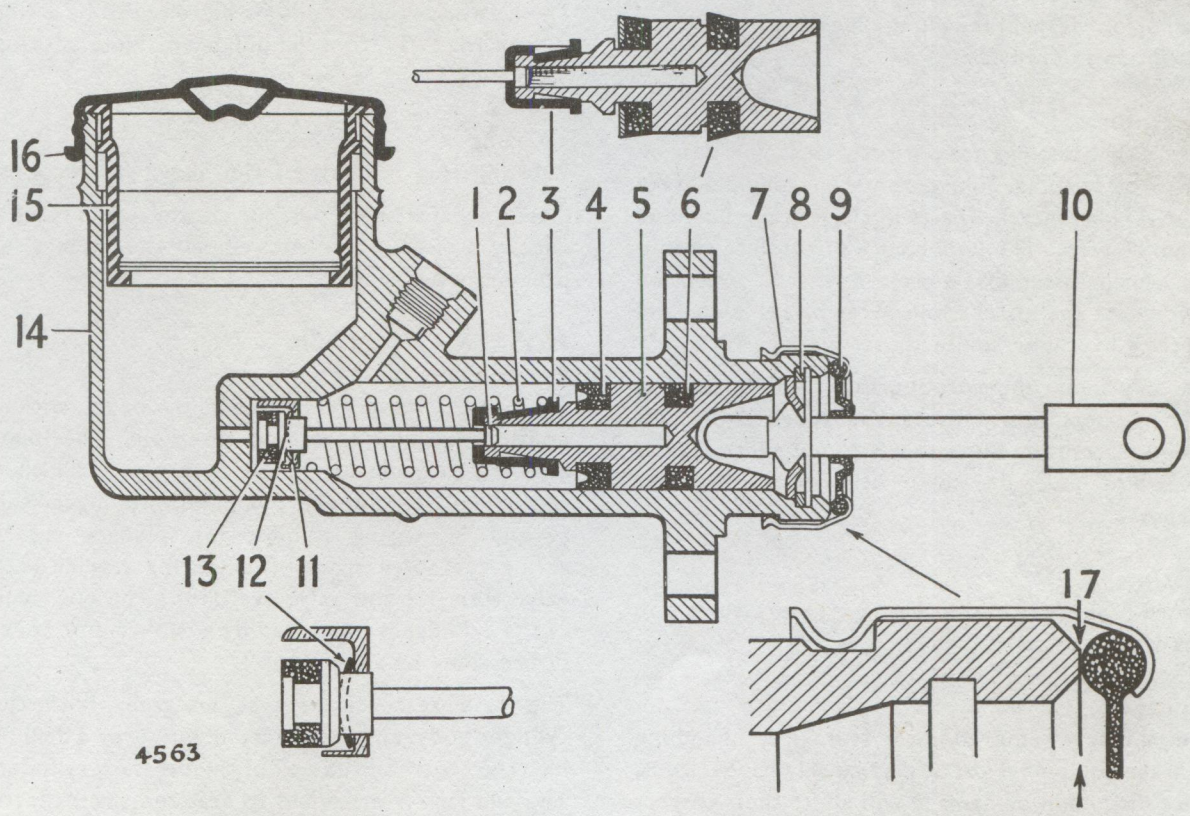

Fig. 6. *Sectional view of master cylinder*

Examination

When all parts have been cleaned as described above and are thoroughly dry, carry out an examination and scrap all rubber seals which show signs of deterioration. If doubt exists, comparison with new parts will indicate whether replacements are required. Only use genuine replacements. Never attempt to clear out the internal bore of flexible hydraulic pipes by probing since this will undoubtedly result in rupture of the pipe. Where the flexible pipes are choked or perished fit replacements.

Take care not to scratch the highly finished surfaces of cylinder bores and pistons.

Replace all seals, hoses and gaskets with new ones if it is suspected that incorrect fluids have been used, or the system contaminated with mineral oil or grease. Drain off the fluid, thoroughly wash all metal parts, and flush out all pipes, etc., with alcohol or clean brake fluid. Never use anything else for this purpose.

Assembly

Ensure that castings are perfectly clean and bear no traces of cleaning fluid other than genuine brake fluid. Dip all internal parts in clean brake fluid and assemble wet. The importance of absolute cleanliness during assembly is again stressed. Attention is drawn to the instructions given on removing and refitting hydraulic flexible hoses on page 10.

Use only Shell rubberproof grease (red) for packing rubber boots, dust covers and lubricating parts likely to contact any rubber component. Never use white brake grease or other grease for this purpose.

Testing

Before brakes are tested check tyre pressures and correct, if necessary.

Storage

Special care is required in the storage and handling of brake equipment parts, particularly rubber cups, since distortion or damage will affect their correct functioning when fitted.

MASTER CYLINDER

To remove and refit

General

The master cylinder is situated under the bonnet, on the bulkhead immediately in front of the brake pedal. (Its fluid reservoir is larger than that of the clutch master cylinder ($2\frac{1}{2}$" (63 mm.) approximate diameter).

To remove

Disconnect the metal fluid pipe from its connection at the top of the cylinder, by unscrewing the union nut.

Remove clevis pin from pedal, at push rod location.

Compress the pedal return spring and slide out the slotted spring cup.

Remove the two bolts passing through the master cylinder.

The master cylinder can now be removed by easing it forwards away from the bulkhead. Note position of packing.

To refit

Refitting is a reversal of the above instructions.

Check pedal stop rubbers for clearance and reset if necessary (see Page 4). Bleed the brakes as previously described.

MASTER CYLINDER

Description (See Fig. 6)

The master cylinder has an alloy body, with a polished finished bore, and reservoir. The inner assembly is made up of the push rod and dished washer (10), circlip (8), plunger (5), plunger seals (4 and 6), spring thimble (3), plunger return spring (2), valve spacer (11), spring washer (12), valve stem (1) and valve seal (13). The open end of the cylinder is protected by a rubber dust cover (9), retained by a metal cap (7).

The fluid reservoir is cast integrally with the cylinder body, and is connected with it by a drilling into the centre of the end of the pressure cylinder. The end face is machined to seat the small centre valve seat.

When pressure is applied to the push rod the plunger with its seal moves down the polished bore of the cylinder. The centre valve moves initially by a spring (12) on to its seating and is retained by the fluid in the drilling at the back of Item 1, whilst the pressure is transmitted through the pipe-line to the brakes.

On the return of the plunger to its fully retracted position the centre valve is positively retained on its seating by action of the spring (2), thimble (3) and shoulder at the end of valve stem (1), and free movement of the fluid between reservoir and pipe-line is assured.

To dismantle

Disconnect the pressure pipe union from the cylinder and remove the securing bolts and clevis pin from jaw end. Remove the filler cap and drain out the fluid. Lever off the metal cap, pull back the rubber dust cover and remove the circlip with a pair of long nosed pliers. The push rod and dished washer can then be removed. When the push rod has been removed the plunger with seals attached will then be exposed. Remove the plunger assembly complete (use low air pressure). The assembly can then be separated by lifting the thimble leaf over the shouldered end of the plunger. The seal should be eased off the plunger. Depress the plunger return spring, allowing the valve stem to slide through elongated hole of thimble, thus releasing tension of spring. Remove thimble, spring and valve complete. Detach the valve spacer taking care of the spacer spring washer which is located under the valve head. Remove the seal from the valve head.

Examine all parts, especially the seals, for wear or distortion and replace with new parts where necessary.

To reassemble (See Fig. 6)

Replace the valve seal (13) so that the flat side is correctly seated on the valve head. The spring washer (12) should then be located on the under side of valve head, being held in position by the valve spacer (11), the legs of which face towards the valve seal.

Replace the plunger return spring centrally on the spacer, insert the thimble (3) into the spring and depress until the valve stem (1) engages through the elongated hole of the thimble, making sure the stem is correctly located in the centre of the thimble. Check that the spring is still central on the spacer. Refit plunger seals (4 and 6) on to the plunger with flat of the seal seated against the face of plunger. Insert the reduced end of plunger into the thimble until the thimble engages under the shoulder of the plunger. Press home thimble leaf.

Smear the assembly with brake fluid, and insert the assembly into the bore of cylinder, valve end first, easing the plunger seal lips into the bore. Refit the push rod assembly into the cylinder, followed by the circlip which engages into groove machined in cylinder body.

Replace the rubber dust cover and metal cap and refit the cylinder to the chassis. Ensure that the rubber dust cover seats correctly (17).

Bleed the brakes.

WHEEL CYLINDERS—FRONT

To remove

Remove the front brake shoes as described on page 10.

Unscrew the metal pipe union(s) to each wheel cylinder at rear of back plate. Remove the large hexagon nut and two set screws securing each wheel cylinder to the back plate. Withdraw cylinders from front of back plate.

To refit

Refitting is the reverse of the removal procedure, but reference should be made to "Brake Shoes—Front. To refit" on page 11 when refitting the brake shoes. It will be necessary, following refitting, to "bleed" the hydraulic system as described on page 5.

WHEEL CYLINDER—REAR

To remove

Remove the rear brake shoes as described on page 11.

At the rear of back plate remove the clevis pin securing the hand brake cable to the operating link which protrudes through the back plate.

Unscrew the metal pipe union from the rear of wheel cylinder. Unscrew the bleeder valve from the wheel cylinder.

Remove dust cover from rear of back plate and, using a screwdriver, prise retaining plate and spring plate apart; then pull retaining plate from beneath the neck of the wheel cylinder. Withdraw the handbrake cable lever from its position between the back plate and wheel cylinder. Remove the spring plate and finally the wheel cylinder from the back plate.

To refit

Refitting is a reversal of the removal procedure.

Reference should be made to "Brake Shoes—Rear. To Refit" on page 12 when refitting the brake shoes. It will be necessary to "bleed" the hydraulic system as described on page 6.

WHEEL CYLINDERS

To dismantle

(See Figs. 8 and 9)

Before dismantling any of the wheel cylinders refer to "Brake Overhaul. General Instructions" on page 7.

Front. Remove the front wheel cylinders.

Remove the rubber dust cover from the end of the cylinder, and withdraw the piston, rubber seal, seal support, spring and spring base (gentle air pressure applied to union hole at rear of cylinder will assist removal).

Rear. Remove the rear wheel cylinder.

Release the clip and remove the rubber dust cover; remove the piston with the rubber seal.

The hand-brake-operating mechanism is released with the wheel cylinder.

To reassemble

Reassembly is the reverse of the dismantling procedure, but reference should be made to "Brake Overhaul. General Instructions" on page 7.

Ensure that rubber seals are fitted the correct way round in the cylinders. On the front and rear wheel cylinders, this is with the lip or widest end of seal facing the blank end of the cylinder.

Refit the wheel cylinders.

FLEXIBLE HOSES

To remove (See Figs. 7 and 10)

The flexible hoses must be disconnected at the support bracket end first, otherwise rupture of the hose is likely to occur. Protect all connections against the ingress of foreign matter.

Front. Release conical pipe union nut below bracket on front cross member. Undo sleeve nut and lift out hose. Take off retaining clip (Fig. 7).

At the support bracket on the brake back plate, unscrew the conical union securing the metal pipe to the end of the flexible hose (Fig. 10).

Unscrew the lock nut, and release hose.

Rear. At the bracket on the underframe above the rear axle, unscrew the conical union securing the metal pipe to the end of the flexible hose.

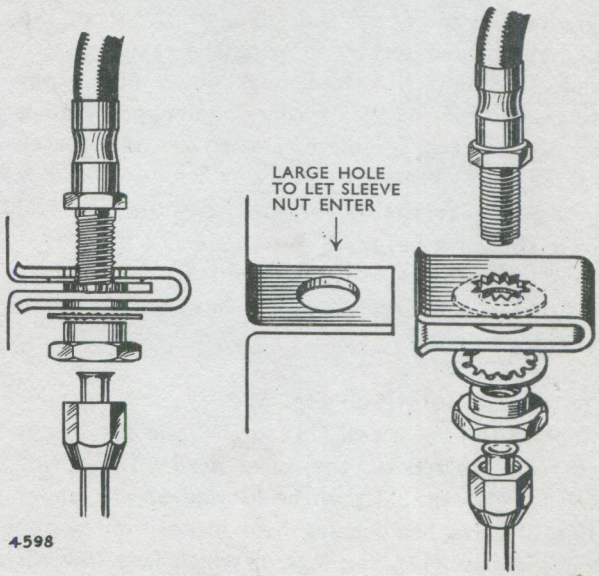

Fig. 7. *Front flexible hose fixing at cross member*

Hold the hexagon of the flexible hose end sleeve at one side of the support bracket, unscrew the lock nut from the other side and release hose. Unscrew the hose at the other end, allowing the hose to rotate.

Do not attempt to clear the bore of a flexible hose by probing. If a hose is choked or perished fit a replacement.

To refit

Refitting is a reversal of the above procedure. The front hose-retaining clips on each side of the cross member (Fig. 7) should be fitted, bi-hexagon upwards, *after* securing the hose to the bracket on the back plate.

When refitting the rear flexible hose at the support bracket end, *ensure that the hose does not twist*, by holding the hexagon of the end sleeve with a spanner whilst tightening the lock nut.

After refitting the hose(s) it will be necessary to "bleed" the hydraulic system as described on page 5.

BRAKE SHOES—FRONT

To remove and refit

General

Always fit factory-lined replacement shoes, obtainable from Humber dealers. These have the correct type of lining and are accurately ground to size, which ensures a quick and easy "bed in" to the drums.

When refitting replacement shoes, always fit a new set of shoe return springs.

To Remove (See Fig. 8)

Jack up the car and remove road wheel. Remove the countersunk screw securing the brake drum to the hub and remove drum.

Slacken off the shoe steady pin in the backplate. Remove the anchor pivot pin. The shoe may now be lifted out of the slot in the wheel cylinder piston and the abutment slot in the body at the anchor end. Detach the pull-off spring from the shoe and backplate. Refit in reverse to the above procedure.

Reset steady posts as on Page 13.

To refit

Smear the tops of the steady posts, and the operating and abutment ends of the new shoes with Shell

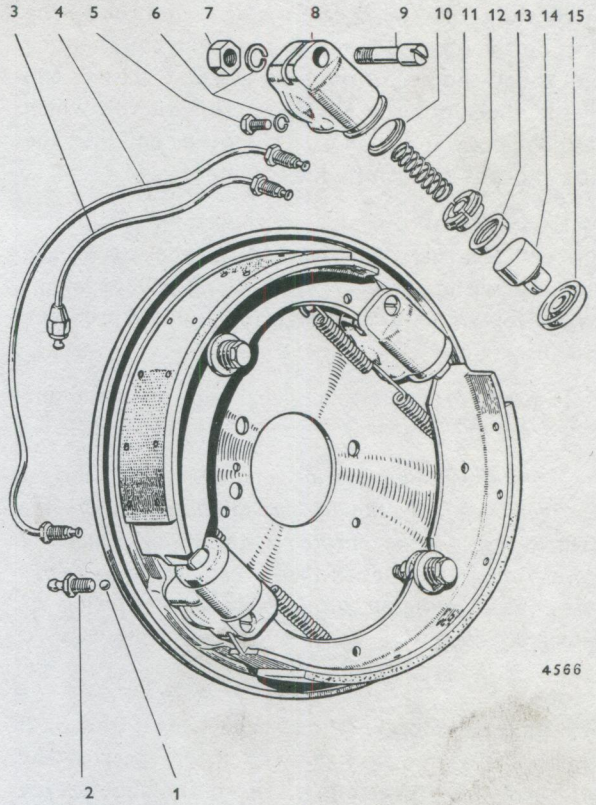

1-2 BLEED SCREW AND BALL
3. BRIDGE PIPE
4. CONNECTING PIPE
5. SET BOLTS
6. SPRING WASHERS
7. PIVOT PIN NUT
8. WHEEL CYLINDER BODY
9. PIVOT PIN
10. SPRING ABUTMENT PLATE
11. SPRING
12. AIR EXCLUDER
13. SEAL
14. PISTON
15. DUST COVER

Fig. 8. *Exploded view of front brake*

SB2498 or S3646 (white) brake grease. This brake grease must not be allowed to come into contact with hydraulic cylinder pistons or rubber parts, nor must any grease be allowed to get onto the brake shoe stabilisers or the corresponding contact area on the brake shoe webs. Keep all grease off the linings and do not handle linings more than necessary.

Pair the brake shoes. Assemble the stabiliser parts to each brake shoe (Fig. 1B) ensuring that the pips in the lower friction disc locate correctly in the stabiliser pin and brake shoe. Do not tighten the stabiliser nut at this stage—engage it with the threads and screw it down one turn only, so that the stabiliser parts are held lightly in position.

Hook the short end of one spring round the spring post on the underside of the shoe web and the long end round the peg of the back plate. Place the end of the shoe into the abutment slot on the wheel cylinder body and then ease the other end into the piston of the opposite wheel cylinder.

Make sure that the slot in the stabiliser locates correctly on the steady post. Hold the base of the stabiliser with a $\frac{3}{8}$" W. ($\frac{7}{16}$" B.S.F.) open-ended spanner to prevent it from turning, and fully tighten the stabiliser nut.

Refit brake drums ensuring that they are clean and free from grease or oil.

By lightly assembling the stabiliser parts, correct engagement of the slot in the stabiliser pin with the steady post can be ensured without any danger of "over-riding" the pips in the lower friction disc—this could result in the pin turning and the slot facing the wrong direction.

Note

If replacement brake shoes have been fitted or if there is any question of uneven wear across the width of the brake linings, the brake shoe steady posts should be adjusted.

To centralise the Brake Shoes

After reassembling the front brakes, it is important to centralise the brake shoes.

This is achieved by slackening the brake cylinder fixing screws and brake shoe pivot pins sufficiently to permit movement without "rock", i.e. half to three quarters of a turn.

Apply the footbrake—approximately 20—30 lbs. (9—14 kgs.) at the pedal pad—and while the brakes are "on" retighten the pivot pins and fixing screws securely.

If an abnormal amount of pedal travel is necessary to give satisfactory application of the brakes, it is usually an indication that the brakes have not been correctly centralised or that the brake shoe steady posts require adjustment as subsequently described.

Refit road wheel.

BRAKE SHOES—REAR

To remove and refit

General

Always fit factory-lined replacement shoes. These have the correct type of lining and are accurately ground to size which ensures a quick and easy "bed in" to the drums.

When fitting replacement shoes always fit a new set of shoe return springs.

To Remove

Chock the front wheels, jack up the car and remove road wheel. Slacken off all available shoe adjustment by rotating square-headed adjuster anti-clockwise. Remove the countersunk screw securing the brake drum to the hub and remove drum.

Pull the leading (rearmost) shoe away from the expander piston and then lift the other end of the shoe out of the slot in the adjuster tappet. Remove the shoe and disconnect the pull-off springs.

Each of these is of the same type.

To Refit

Smear the tops of the steady posts, the operating and abutment ends of the new shoes with (white)

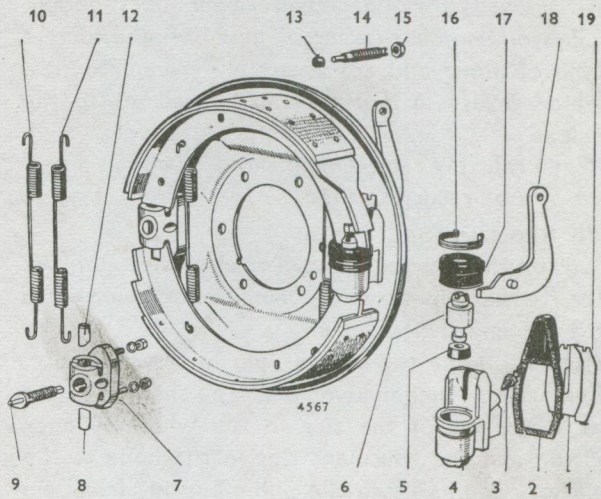

1. SPRING PLATE
2. DUST COVER
3. BLEED SCREW
4. BODY
5. SEAL
6. PISTON
7. HOUSING
8. LINK
9. WEDGE
10. } RETURN SPRINGS
11. }
12. LINK
13. FELT
14. STEADY PIN
15. LOCKNUT
16. DUST COVER CLIP
17. DUST COVER
18. LEVER
19. RETAINER PLATE

Fig. 9. *Exploded view of rear brake*

brake grease. Keep all grease off the linings of new replacement shoes and do not handle the linings more than necessary.

Pair the brake shoes (the leading shoe has the lining positioned towards the adjuster end of the shoe and the trailing shoe has the lining positioned towards the operating end in both left-hand and right-hand brake assemblies.)

Fit the pull-off springs to the underside of the shoes. Position the trailing (foremost) shoe on the back of the wheel cylinder and on the adjuster tappet. Pull the leading shoe outwards and ease it on to the slots in the wheel cylinder piston and the adjuster tappets.

Refit brake drums, ensuring that they are clean and free from grease or oil.

Note

If replacement brake shoes have been fitted or if there is any question of uneven wear across the width of the brake linings the brake shoe steady posts should be adjusted as described. Refit road wheel. Adjust brakes as described on page 4.

BRAKE SHOE STEADY POSTS
(Front and Rear)
General

The brake shoe steady posts require resetting only when replacement brake shoes are fitted or if there is evidence of uneven wear across the width of the linings.

The steady posts, one for each shoe, are threaded in the back plate and should contact the underside of the brake shoe web. The end of the steady post, accessible at the rear of the back plate, is provided with a screwdriver slot and lock nut (Figs. 9 and 10). The object of the steady posts is to hold the shoes square with the drum when in the off position. This is important to obviate any loss of travel. The shoes must be ready to contact the drum immediately without tilting and with a minimum of travel.

To adjust

To ensure correct location between shoes and drum:—

A. Loosen lock nut.

B. Unscrew (screwdriver in slot) the adjustable steady posts two turns (anti-clockwise).

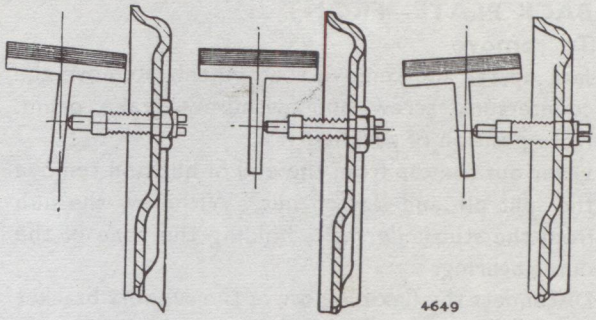

C. Adjust shoes to the drum with the normal shoe adjusters on the rear, until the drum cannot be turned. The front shoes will require an assistant to apply the foot pedal—holding the brakes on.

D. Turn the steady post clockwise until it just contacts the shoe. Feel it touching the shoe, it must not be hard on.

E. Tighten lock nut.

F. Adjust shoes by releasing the rear adjusters to give correct clearance between shoe and drum.

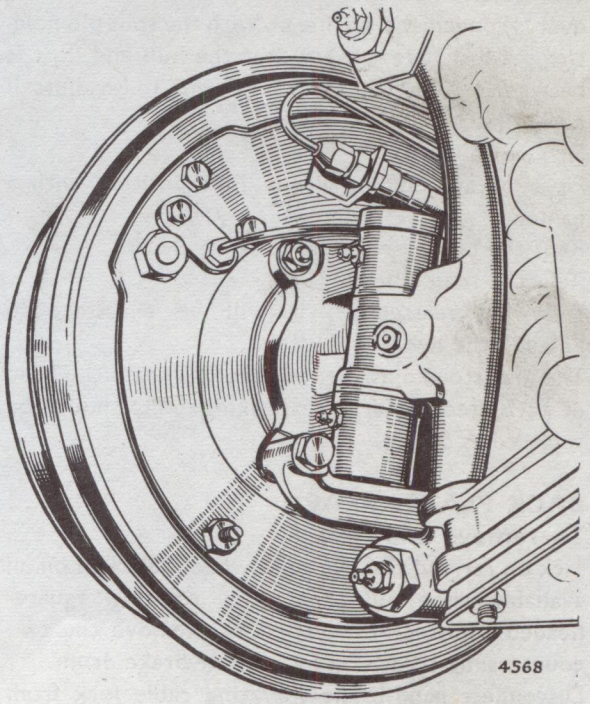

Fig. 10. *Back plate—front view, showing pipe location*

BACK PLATE—FRONT

To remove

Jack up car and remove road wheel. Remove the countersunk screw and withdraw brake drum. Note position of packing.

Lever out the cap from the end of hub and remove the split pin and slotted nut. Withdraw the hub from the stub axle shaft, holding the cone of the outer bearing.

Disconnect the flexible hose at the support bracket on the crossmember as described on page 10.

Remove the four nuts and bolts securing the back plate to the stub axle carrier. Remove the back plate complete with shoe assemblies and dust excluder.

To refit

Refitting is the reverse of the removal procedure, but reference should be made to page 11 when reconnecting the flexible hose. When the hub has been refitted, tighten the castellated nut to 15—20 lbs./ft. (2·074—2·765 kilogrammetres).

TO OBTAIN THE CORRECT ADJUSTMENT of the hub assembly undo the nut 1 to 1½ flats, whichever is convenient, to line up with the split pin hole. Using a dial gauge, check that the hub end float is between ·005″/·009″ (·13/·23 mm.) Readjust if necessary.

Fit new split pin.

Fit hub cap, tapping firmly into position with a hammer.

Refit the brake drum and packing piece.

Refit the road wheel.

Following reassembly, it will be necessary to "bleed" the hydraulic system.

The lock stop adjustment washer, beneath the head of each steering arm rear fixing bolt, should be replaced as before.

BACK PLATE—REAR

To remove and refit

Jack up car and remove road wheel. Slacken off all available shoe adjustment by rotating square-headed adjuster anti-clockwise. Remove the two countersunk screws and withdraw brake drum.

Disconnect hand-brake-operating cable fork from lever on backing plate by removing clevis pin. Note position of washers.

Release brake pipe connections from backing plate. Protect brake pipe connections against the ingress of foreign matter. Remove nuts and bolts securing brake backing plate to flange on axle casing.

Draw out driving shaft complete with brake backing plate and hub bearing, using Churchill Tool No. RG.16 (see also Section G).

Remove the oil deflector (Fig. 1, Section G), if this is not dislodged by the shaft.

Secure the tool to the hub by means of the road wheel nuts and drive the sliding weight smartly away from the vehicle. *Do not attempt to drive out the shaft by striking the brake backing plate, as this procedure can only cause damage.* Refitting is a direct reversal of the above. Remember to fit the conical deflector before entering the shaft assembly into the axle casing. The shaft and bearing can be tapped into place with a mallet. (See also notes on Oil Seals and Grease Retainers, Section G).

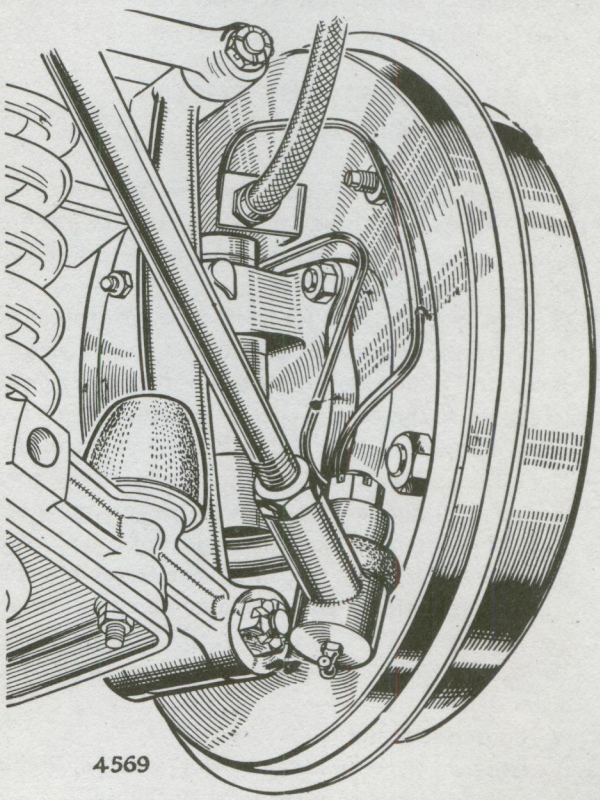

4569

Fig. 11. *Back plate (front wheel), rear view*

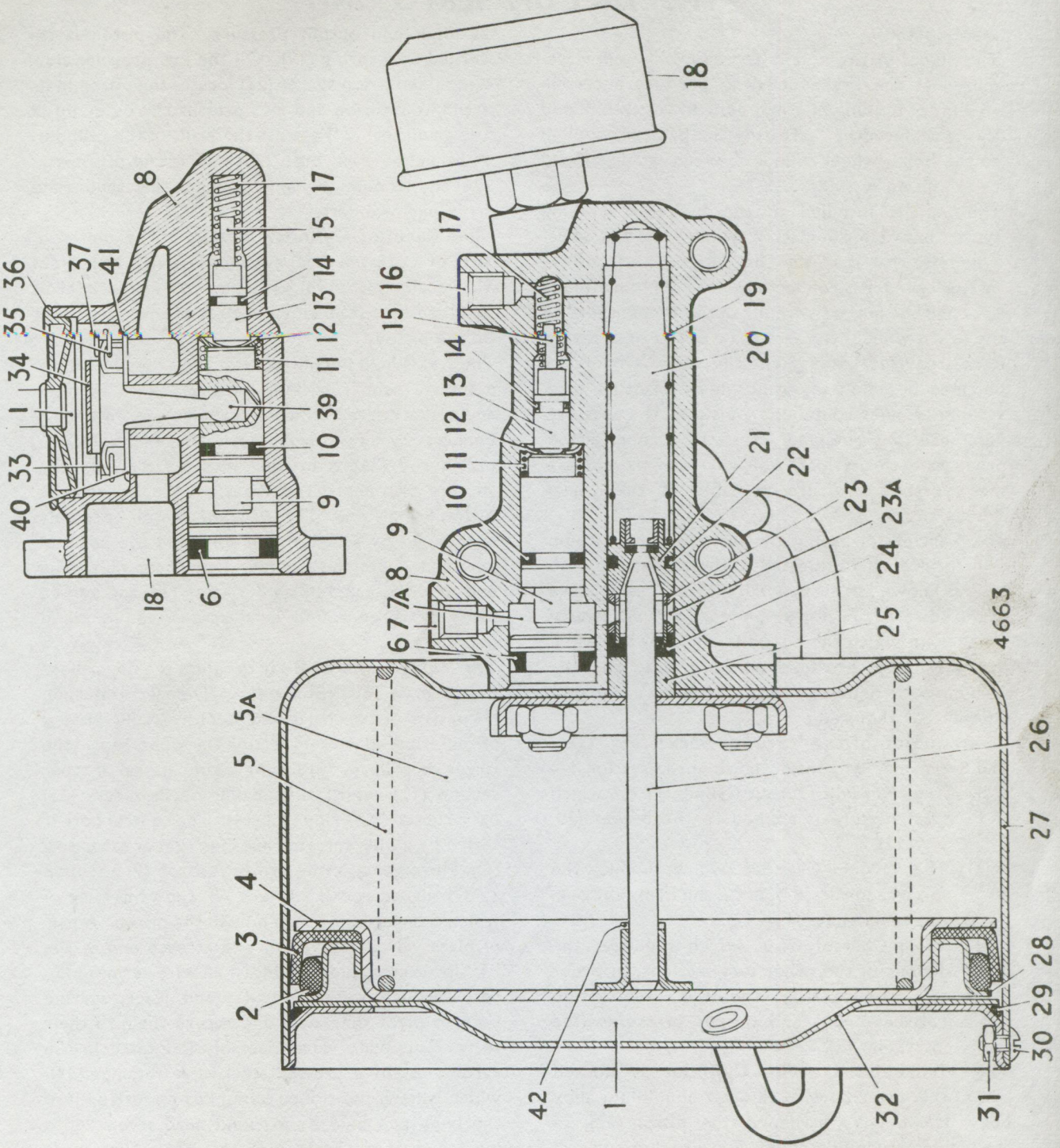

Fig. 12. *Section through servo unit*

THE VACUUM SERVO UNIT

Description

The object of the unit is to reduce the effort required at the brake pedal to produce a certain amount of braking in a hydraulic brake system and this is achieved by increasing the pressure applied to the brake wheel cylinders over that developed by the master cylinder.

The unit is installed in the hydraulic braking system between the master cylinder and the wheel cylinders; that is to say the outlet pipe from the master cylinder is connected to the Servo hydraulic inlet and the Servo hydraulic outlet is connected to the brake wheel cylinders. The Servo or assisting force, required to augment the driver's effort, is obtained by admitting atmospheric pressure to a vacuum cylinder containing a piston. The pressure difference thus obtained across the vacuum piston produces a thrust load which is used to increase the hydraulic pressure available at the wheel cylinders.

The principle of having the piston in the vacuum cylinder normally subjected to the vacuum on both sides is known as "Suspended Vacuum", as opposed to the "direct" or "non-suspended" vacuum type of cylinder, in which the piston is normally subjected to atmospheric pressure on both sides and the vacuum is introduced to one side when a pressure difference is required.

Construction of the Vacuum Servo (Fig. 12)

The Servo may be considered in three sections:—

(1) The Hydraulic Output Cylinder, from which the pressure is applied to the brakes (20, Fig. 12).

(2) The Vacuum Cylinder, which supplies the force required to operate the hydraulic output cylinder (27, Fig. 12).

(3) Valve Control Gear, which regulates the actions of the other two sections, in order to produce the required relationship between input and output pressures (see inset, Fig. 12).

The Hydraulic Output Cylinder is housed within the lower bore of the cast aluminium alloy body. It contains a hardened steel piston (22), on the high pressure side of which is a rubber cup seal (21) which, when required, serves to separate fluid at input and output pressure. The piston is returned by a spring (19). On the low pressure side, a moulded nylon spacer (23) locates the piston in its standing position and also presses the outer lip of the gland seal (24) against the walls of the cylinder. A hardened steel bush (25) guides the piston rod (26) and its outside diameter aligns the vacuum and hydraulic cylinders.

The Vacuum Cylinder section of the unit consists of a pressed steel cylinder (27) in which slides the vacuum piston (4). This carries a leather seal (3) retained by a steel ring which is an interference fit on the piston.

The seal is held in contact with the cylinder wall by a sponge rubber backing ring (2). Both cylinder and seal are treated during manufacture, rendering unnecessary any further lubrication in service. A piston rod (26) is pressed into a ferrule on the vacuum piston (4); this transfers the load to the hydraulic piston. The vacuum piston assembly is retained by a helical coil spring in the position where it abuts the cylinder end cover (32). The end cover is sealed by an "O" ring (29) and held in place by three round head screws and hexagon nuts (30, 31).

The Valve Control Gear occupies the upper bore in the servo body (8) and the valve chest (inset, 8). It consists of two hardened steel hydraulic pistons of differing diameters acting in opposition, the larger or primary (9) having a rubber seal of taper section (10), whilst the smaller or secondary (13) has a rubber "O" ring seal (14). The control bore is sealed by a plug carrying another rubber taper seal (6). Movements of the primary piston (9) act upon a "T" shaped rocking lever (39), the centre leg of which is engaged in a side hole in the piston. A pair of plate valves is pivoted, one at each end of the "T" lever cross piece and formed wire springs (35), pass through valves (40, 41) and lever, serving both to pivot the valves and return them to their seats. This plate valve assembly is located in the valve chest by a pressed steel valve retainer (34), which is itself positioned by a Mills pin driven into the body and held by a round head screw and a locking washer. Tightening this screw also loads the valve return spring. When acted upon by the

primary piston the rocking lever moves the whole valve assembly until restrained by the end of the valve return spring striking the valve retainer; further movement at the primary piston then lifts the appropriate valve. A secondary formed wire spring (37), fitted above the valve retainer, assists the above operation.

A helical coil spring (11) fitted behind the primary piston provides bias to keep the vacuum valve normally open. This spring is seated upon a Belleville washer (12) which introduces a higher spring rate over the final portion of the piston stroke.

Four studs are cast into the servo body and the vacuum cylinder is held in place by self-locking nuts screwed on to these with a flexible composition gasket interposed between cylinder and body to seal the joint at the vacuum port. A flanged clamping plate stiffens the cylinder at this point.

A vacuum pipe extends from the valve chest to the vacuum cylinder end cover. At the valve chest it is riveted to the centre of a moulded nylon lid (36), which itself has an interference fit in the valve chest to provide a seal. As an additional precaution the lid is retained by two round head screws and locking washers. To permit removal of the end cover a joint is provided in the vacuum pipe, with a restricting washer located between the two pipes, and here the pipes are overlapped and sealed with a rubber sleeve.

The servo unit is fitted with an air cleaner, this has an element of galvanised steel wire, moistened with brake fluid. The air cleaner cover is detachable to facilitate washing and re-treating the element.

OPERATING PRINCIPLES (Figs. 12 and 13)

1. Fluid from the master cylinder outlet enters inlet (7) on to (7A) and (23A) passing the push rod (26) and through hole in servo piston (22) and seal (21) into cavity (20) filling operating valve piston chamber (17) on to outlet (16) to the wheel cylinders. Restoring the system from air to fluid during bleeding operation is carried out at the wheel cylinders in the normal manner. The servo, being a chamber, is automatically bled in the process of the fluid passing from master cylinder to wheel cylinders. The servo does not function during the bleeding operation.
2. At the commencement of the pressure application, building up from the master cylinder, the fixed volume of fluid flows throughout the hydraulic system maintaining equal pressure wherever (and through whatever shape) it goes. There is movement of this fixed volume to expand the shoes to the drum. When the movement is continued, higher pressure may be obtained in this one (enclosed) system from master cylinder to wheel cylinder. It is during the increase of pressure from the master cylinder that the servo functions.
3. The increase of pressure is on the large area of control operating piston (9) with rubber seal (10) attached; there is equal pressure increase in the chamber (17), and on the lesser area of valve operating piston (13) with ring seal (14) attached. The effort on the large area (9) which contacts the valve-operating piston (13) compels the two valve-operating pistons to move towards the chamber (17).
4. Inserted into the valve-operating piston (9), is a lever (39), attached to a valve (40) and another of the same type (41). The control piston (9) when not operating (that is, when no pressure is in the hydraulic system) is maintained in the off position against stop containing seal (6) by the springs (11) and (17) which allows valve (40) to be off the seat of the body (8). This valve being open allows the cavities (5A) and (1) to be under the same conditions.
5. The cavity (5A) is connected to the large servo piston (4) on the inside area, and to the induction manifold direct. Between the servo and the induction manifold a non-return valve is required to prevent damage to the servo in the event of a backfire and also to prevent the passage of petrol to the servo.
6. Cavity (1) (the rocker valve chamber), sealed by cover (36), is connected to the back of servo piston (4) by Bundy tubing. Cavities (5A) and (1) have a through passage by the valve (40) being off the seat and this allows any depression from the induction manifold to be equal on each side of the servo piston (4) (i.e. suspended vacuum). This servo piston (4) is

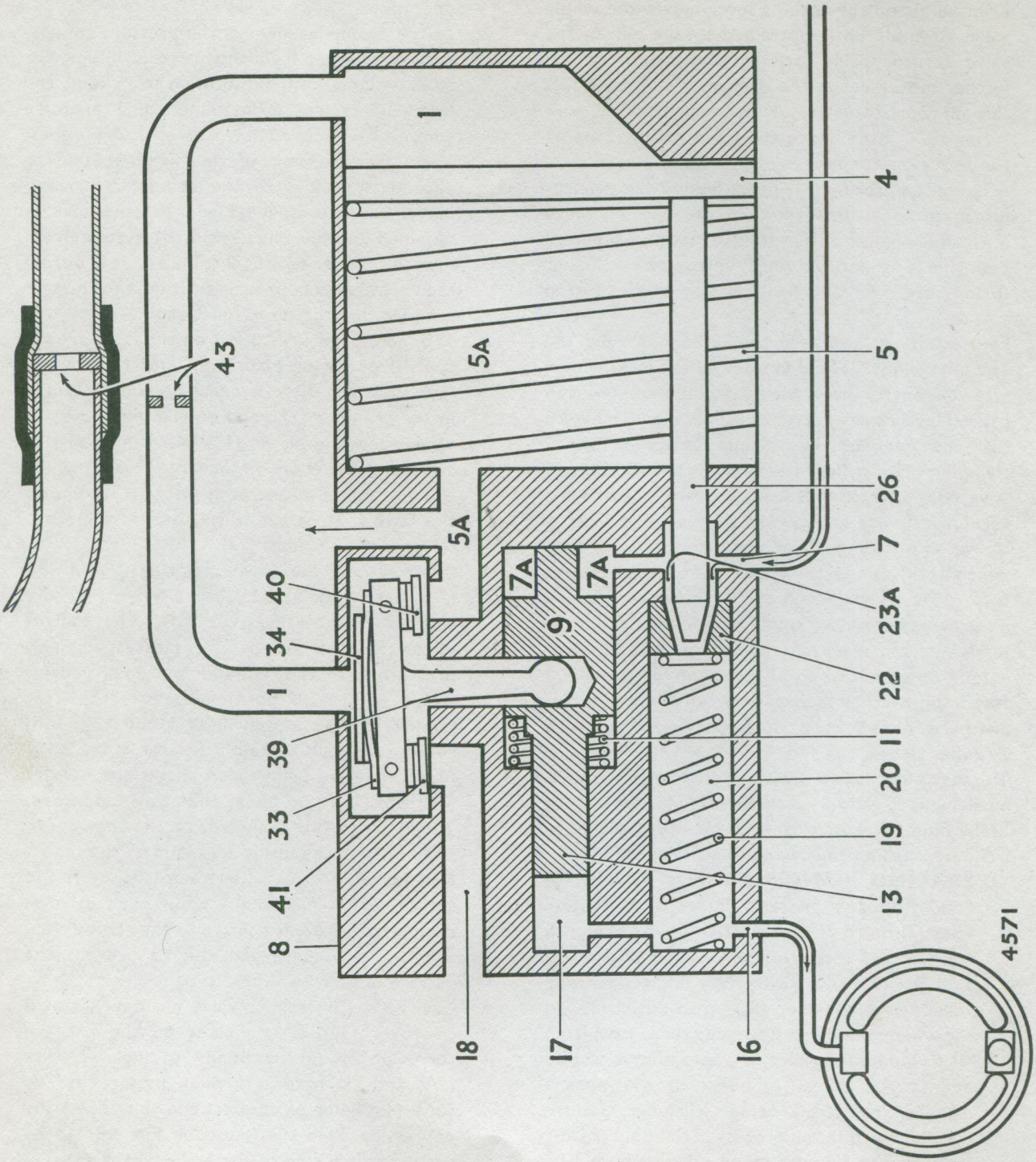

Fig. 13. *Servo operation—Explanatory diagram*

held in the off position by large spring (5), screw pins and nuts (30) and (31). End cover (32) with a sealing ring (29) prevents air from leaking into the chamber (1) at the back of the servo piston (4) when under depression.

7. With increase of pressure in the hydraulic line as stated in paragraph 3, control piston (9) moves towards the chamber (17). This movement is conveyed to the lever (39) and closes the nylon valve (40). If the pressure applied to the brake pedal were very light and remained constant, the effort required to move the operating piston would be sufficient to close valve (40), but not move enough to open valve (41); no change beyond the valve closing would therefore occur. The closing of this valve would separate the two cavities (5A) and (1), both still remaining under depression.

8. On increasing the pedal effort to obtain a higher hydraulic line pressure, operating valve piston (9) with lever (39) will move and open valve (41), connecting cavity (18) which is directly open to atmosphere via air cleaner (18). Valve (40) remains on the seat. Valve retainer (34) and spring (33) sustain the valve rocker lever (39) during movement.

9. The cavities (1) to the back of the servo piston (4) are subject to atmospheric pressure. The front section of the servo piston (4) in cavity (5A) is subjected to depression. Leather seals and supports (3), (2) and (28) sealing against the servo cylinder body (27) retain the pressure on servo piston (4). The pressure is thus exerted on piston rod (26), which is supported by a bush (25). The gland seal (24) holds the depression in chamber (5A) and at the same time holds the hydraulic pressure.

10. The pressure on piston rod (26) closes the fluid passage between the rod and servo hydraulic piston (22). The seal (21) allows pressure to build up in cavity (20) on to the wheel cylinder. The force on the piston rod (26) overcomes the hydraulic pressure in the system from the master cylinder in cavities (7), (7A) and (23A), immediately resulting in piston rod (26) moving forward in contact with piston (22) and seal (21). Two hydraulic line pressures are created.

    (*a*) The lower pressure from the master cylinder on the valve-operating piston (9) in chamber (7A) and on the back of hydraulic servo piston (22) in chamber (23A).

    (*b*) The atmospheric pressure on the vacuum servo piston area (4), through piston rod (26) on to hydraulic servo piston (22), causes cavities (20), (17) and (16) on to the wheel cylinders to have higher pressure.

    The hydraulic system is parted to a low and high pressure side: (7), (7A) and (23A) low and (20), (17) and (16) high.

11. The increase of pressure obtained with valve (41) being open, remains until the pressure in chamber (17) on piston area (13) is greater than the pressure in chamber (7A) on control piston area (9); the higher pressure side (13) will then move the lever (39) to return the valve (41) on to the seat of the body. The valves (40) and (41) are both closed as described in paragraph 7.

12. The valve positions are closed. The servo effect is not the same as the closed position in paragraph 7. In all cavities (1) and back of servo piston (4) atmosphere remains, and the depression is in cavities (5A) and front of servo piston (4). In the hydraulic system, pedal pressure remaining constant, the higher pressure at (17) which closed valve (41) against the lower pressure on operating piston (9), remains static, so giving a constant line pressure to the wheel cylinder. This line pressure is determined by the effort on the pedal which commenced the movement to open the valve (41). Assistance is only obtained when the valve (41) is open. The stoppage of atmosphere when valve (41) closes retains the vacuum servo piston (4) with pressure on one side and depression on the other.

13. Increase of pedal effort will raise the low pressure side of the hydraulic system, at the same time giving slight assistance to the high pressure side, i.e. on piston area (22). When the pressure increase on control valve piston (9) is sufficient again to move valve rocking lever (39) and open valve (41), assistance is increased to the high pressure hydraulic system and so to the wheel cylinders. When the control piston (9) is at the extremity of its travel, it contacts a Belleville washer (12) fixed between the return spring (11) and the body (8). On piston rod (26) attached to vacuum servo piston (4) is a washer (42) which prevents tilting or damage should the servo reach the end of its travel due to insufficient adjustment of shoes, etc. At any time effort is added by the pedal, i.e. after the maximum obtained from the servo has been reached, it will be increased in the wheel cylinder hydraulic system from the lower pressure side on the piston area (22).

14. The diagram (Fig. 13) illustrates valve control piston in off position, (41) valve closed, (40) open, and return to single hydraulic system. Releasing the effort applied at the pedal results in operating valve piston (9) having a pressure drop below the effort on valve piston (13) which allows the valve rocker lever (39) to move and close valve (41) and open (40). Atmospheric pressure is immediately cut off and equal vacuum results each side of the servo piston (4). The hydraulic servo piston (22) is assisted in its return by spring (19) and vacuum piston spring (5). The piston (22) is held at the correct off position by spacer (23).

15. Into the tubing connecting the pipe from the valve chamber (1) to the back of vacuum servo piston (4) and servo chamber (1) is inserted a restriction washer (43). In the event of a sudden fast application of the brake pedal this restrictor prevents an inrush of atmospheric pressure surging the hydraulic output line. It in no way delays the action, which remains in direct proportion to the pedal speed. It prevents the servo piston (4) receiving a shock impulse.

SERVO UNIT—To remove

(See Fig. 16)

Disconnect vacuum pipe and hydraulic inlet and outlet pipes from servo body. The removal of the three bolts in the side of the body will then release the complete unit from the vehicle. The hydraulic fluid can be drained by holding the unit in a vertical position, with vacuum cylinder uppermost.

Air Cleaner Assembly—To remove

(See Fig. 14)

Unscrew from servo body, using hexagon. To dismantle air cleaner, prise out spring clip and remove cover. The element can now be taken from inside the cover.

Vacuum Cylinder—To dismantle

Hold unit in a vice by means of mounting lugs cast on body.

Remove three nuts and three screws from vacuum cylinder end and slide back rubber sleeve in direction of body to reveal the joint in the vacuum pipe.

The end cover assembly is now held in position only by the friction of the sealing ring and can be withdrawn from the cylinder. This operation should be performed very steadily, since as soon as the end cover assembly leaves the cylinder the vacuum piston assembly will be ejected by the spring.

Care must be taken to avoid any damage to the piston rod. Note the nylon washer (9) during removal.

The vacuum cylinder may be detached by unscrewing four nuts and removing clamping plate.

Use only a dry cloth to clean inside of vacuum cylinder. The use of cleaning fluids at this point may affect the lubricant which is applied on initial assembly.

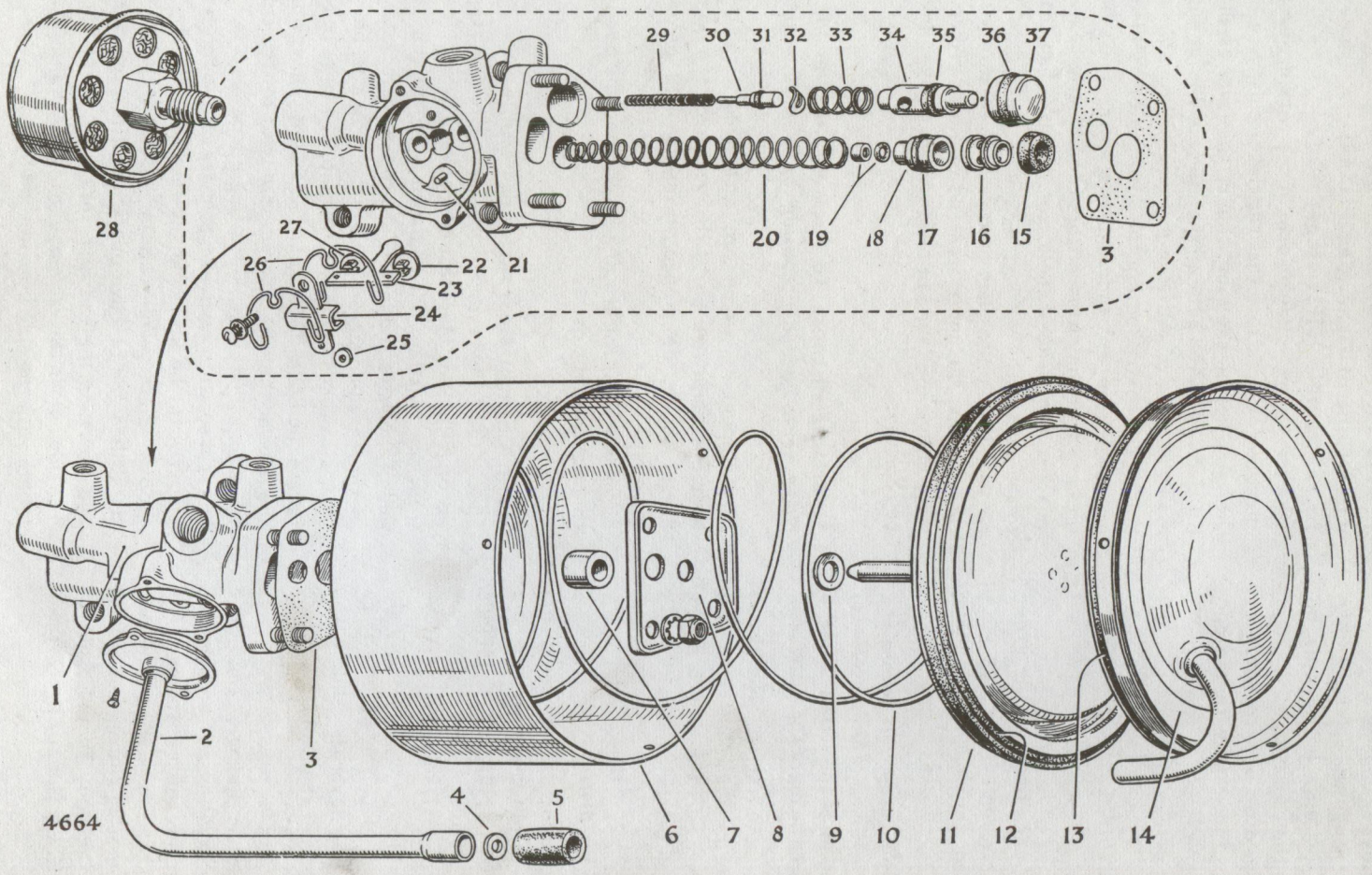

1. BODY
2. VACUUM PIPE
3. JOINT—BODY TO CYLINDER
4. RESTRICTOR—VACUUM PIPE
5. RUBBER SLEEVE
6. VACUUM CYLINDER
7. BUSH—PISTON ROD
8. CLAMPING PLATE
9. STOP WASHER
10. SPRING
11. VACUUM PISTON AND SEAL
12. SEAL EXPANDER
13. SEAL—END COVER
14. END COVER
15. GLAND SEAL
16. SPACER
17. SERVO HYDRAULIC PISTON
18. CUP SEAL
19. SPRING ABUTMENT COLLAR
20. SPRING
21. MILLS PIN
22. VALVE
23. VALVE ROCKING LEVER
24. VALVE RETAINING PLATE
25. SPACING WASHER
26. SPRING—SERVO VALVE
27. VALVE
28. AIR CLEANER PISTON
29. SPRING SECONDARY PISTON
30. SECONDARY PISTON
31. "O" RING SEAL
32. BELLEVILLE WASHER
33. SPRING—PRIMARY PISTON
34. VALVE CONTROL PRIMARY PISTON
35. SEAL—PISTON
36. SEAL—END CUP
37. END CAP

Fig. 14. *Exploded view of servo components*

Vacuum Pipe—To remove

The vacuum pipe passes through the valve chamber lid and is riveted into position. It can only be detached by cutting away the riveting.

The restricting washer can drop out from its seat in the vacuum pipe when the joint with the end cover vacuum pipe is broken.

Hydraulic Output Cylinder—To dismantle (See Fig. 14)

The hydraulic output cylinder occupies the lower bore in the body, and all components in this bore can be withdrawn when the vacuum cylinder and gasket have been removed.

The bush (7) will slide out easily, but before the gland seal (15) can be removed, the spacer (16) must be pushed deeper into the bore, using a hooked tool, freeing the outer lip of the gland seal.

Seal and spacer can then be extracted. The piston (17), cup seal (18), and spring abutment collar (19) will be driven by the spring to the mouth of the bore, from where they can be removed.

Valve Control Gear—To dismantle

Detach vacuum pipe assembly by removing the two round headed screws and locking washers and prising out of body. Remove plug (37) by tapping flange end of body on a soft surface. Unscrew round head screw, depress valve-operating piston (primary) (34) approximately $\frac{3}{32}$" and the complete valve linkage can be withdrawn. The valves may be removed from the rocking lever by sliding the valve return spring out of the holes in these components.

Upon removing the valve linkage, the valve operating piston (primary) will be driven from the bore by the valve-operating piston spring. The spring and Belleville washer can now be removed. To remove the valve-operating piston (secondary) (30) the flange end of the body should again be tapped upon a soft surface. The spring (29) will then be released.

SERVO UNIT—To reassemble

Valve Control Gear (See Fig. 14)

To reassemble (First stage)

Take two valves. Slide an arm of the rocking lever into the slot in each so that the flat circular face of the valve lies on the same side of the lever as the ball end. Align the holes in the valves and lever and insert the end of valve return spring through the holes. The centre loop of the spring is on a different level from the ends and the spring must be fitted so that the distance from the flat faces of the valves to the plane of the loop is greater than that to the ends of the wire.

Drive Mills pin into plain hole in valve chest on the side of body, the unserrated end of pin to project. If the Mills pin is found to be loose, the body should be replaced.

Hydraulic Pistons—To reassemble (Fig. 14)

Clamp servo body in vice, using the lower mounting lug.

All components which are assembled into the hydraulic bores (i.e. bores that run from the body flange) should be dipped in brake fluid before assembly.

Never allow petrol, paraffin or trichlorethylene to contact hydraulic parts.

Valve Control Gear—To reassemble

Slide "O" ring over secondary valve-operating piston (30). Ring must seat in groove provided, free from any twisting. Fit the spring (29) to the tail end of the valve and insert into the deepest section of the three-diameter control bore in the body. with the domed end projecting into the large bore. Locate the Belleville washer (32) in position against shoulder at the end of large bore with convex side towards primary valve-operating piston (34).

Fit taper seal into groove on primary valve-operating piston with the lip facing the recessed side of the groove. Place valve-operating piston spring over the drilled end of valve operating piston (primary) and insert, spring end first, into the control bore. The side hole in the valve-operating piston should be in line with the side hole in the bore.

Insert assembled valve gear into the valve chest in the body so that the ball end of rocking lever engages side hole in the valve-operating piston. Centre loop on valve return spring should be in line with the tapped hole in the body.

Place retainer (24) over valve assembly and hold down against valve return spring whilst the screw and locking washer are screwed into position through retainer and spring and tightened. Check operation of valve gear by depressing valve-operating piston by hand and releasing; valves must move freely.

In the normal position, the valve nearest the body flange should be open, the other closed. Fix taper seal into groove on plug (37) with lip facing recessed side of groove.

Insert plug into remaining stage of control bore (lip side of seal inwards) until about $\frac{1}{16}$" stands proud of the body flange.

Hydraulic Output Cylinder—To reassemble

The output cylinder components are housed in the lower bore in the body, and must all be dipped in brake fluid before assembly.

Fit spring abutment collar (19) into end of cylinder spring and insert, spring end first, into bore in body. Insert cup seal (18), lip first, using a smooth edged tool to start lip into bore, then insert piston (17) (small end of taper bore first). Place spacer (16) against gland seal (15) so the thin rim of the spacer lies between the lips of the seal. Insert both into bore, spacer first, again using smooth edged tool to start lips, and then slip in bush (7) until approximately $\frac{1}{8}$" projects.

Vacuum Cylinder—To reassemble

With body still in vice, place gasket against body flange and slide vacuum cylinder over body studs. **Locate centre hole in projecting portion of bush—this is important to ensure correct alignment of cylinder on body**—add clamping plate and four self-locking nuts and tighten evenly. Insert restrictor washer (4) into the expanded end of vacuum pipe assembly and slide rubber sleeve over the outside of the pipe. Press the moulded lid

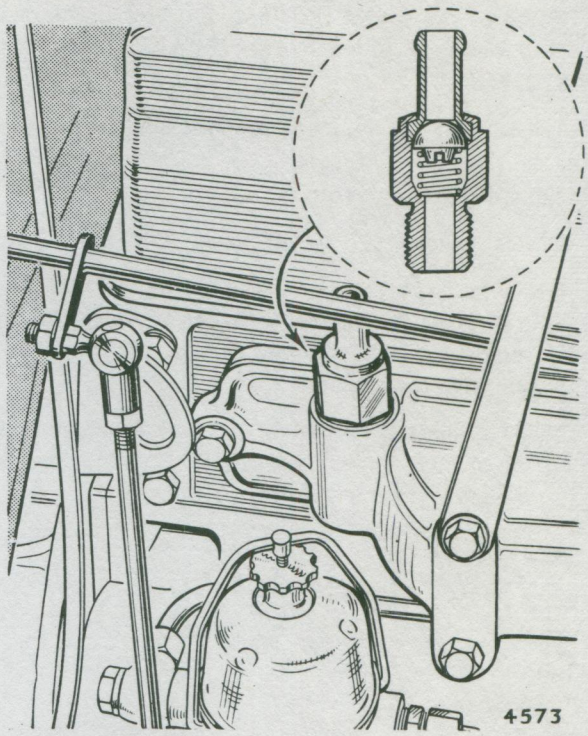

Fig. 15. *Location of one-way valve on manifold*

of the vacuum pipe assembly into the valve chest on the servo body, with the straight length of pipe running alongside the cylinder. Replace the lid-retaining screws and lock washers.

Stretch end cover seal (13) over end cover assembly and roll it into the groove provided. The seal should be free from twisting when seated. Coat well with Shell rubberproof grease. Moisten piston rod with brake fluid, place piston return spring in recess in vacuum piston and rod assembly and assemble, spring first, into vacuum cylinder.

Do not lubricate the inside of the vacuum cylinder, as this is also treated at the works and does not require re-lubrication.

The piston rod valve must pass through the bush and care must be taken to avoid damage to this component. At this stage, the vacuum piston must return in a positive and steady manner under the spring loading after being depressed.

Fitted to the top of the fluid reservoir is the float type switch included in the "BRAKE WARNING SYSTEM"

The topping-up sequence remains unchanged.

To remove and refit

Master cylinder

1. Detach the pipe from the bottom of the fluid reservoir and master cylinder by releasing the union nut and trapping the escaping fluid in a suitable receptacle.
2. The master cylinder is now removed as described under "MASTER CYLINDER—To remove".
3. Refitting is the reverse of the removal sequence, see under "MASTER CYLINDER—To refit".

Fluid reservoir

1. Disconnect the battery and the two leads to the fluid warning switch mounted on top of the fluid reservoir.
2. Detach the pipe from the base of the fluid reservoir by releasing the union nut and trapping the escaping fluid in a suitable container.
3. Remove the fluid reservoir from the rear engine bulkhead by withdrawing two bolts and washers.
4. Refitting is the reverse of the removal sequence but on completion the brakes must be bled of air.

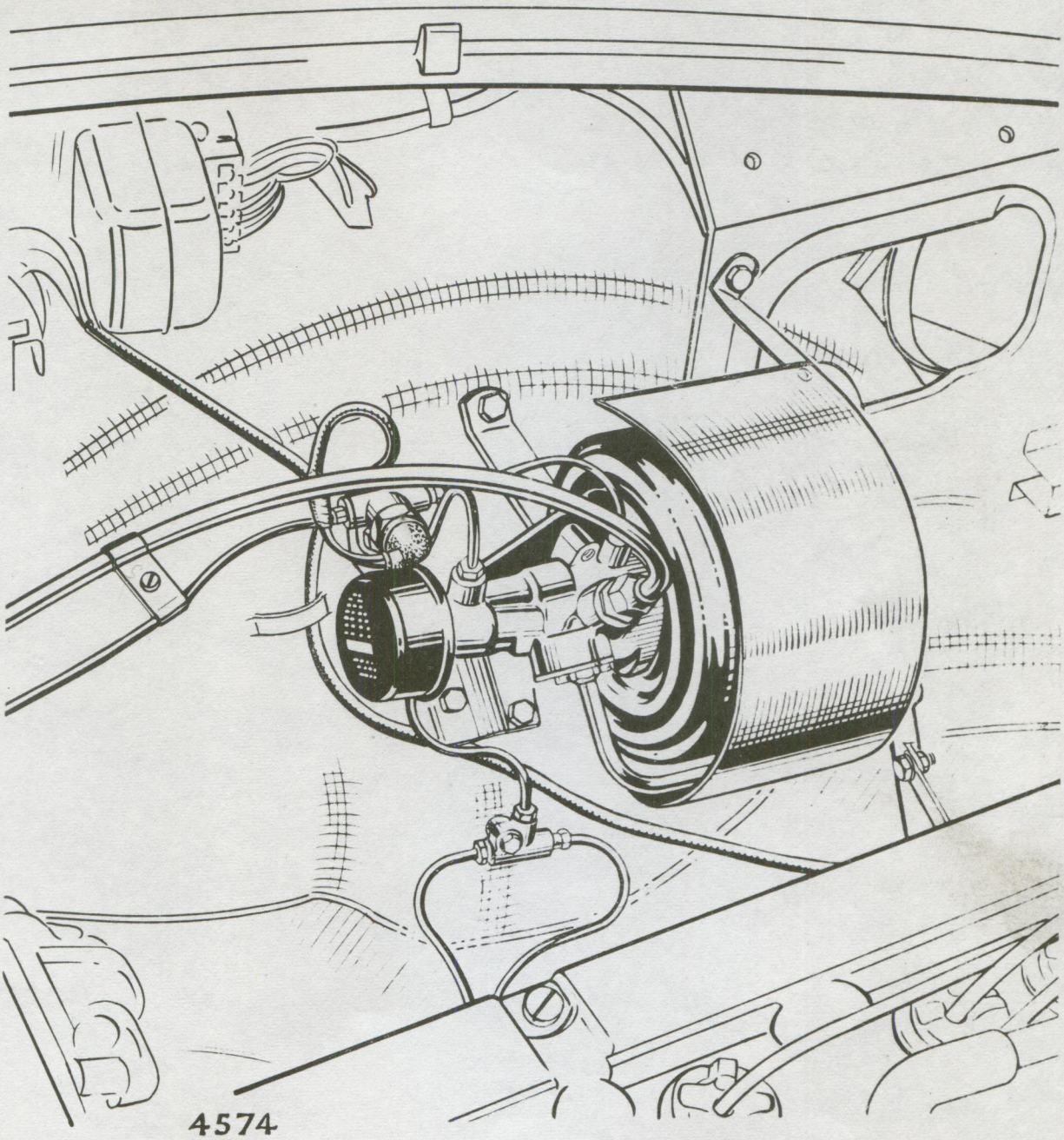

Fig. 16. *Servo installation*

BRAKES

SECTION K

CONTENTS

Page

GENERAL
—Description ... 2
—Pedal Stop ... 2

FRONT BRAKES
—Description ... 2
—Maintenance ... 3
—Brake Pads—To remove and refit ... 3
—Sealing rings—To remove and refit ... 3 and 4
—Caliper renewal ... 4
—Discs—General ... 4
—To remove and refit ... 4 and 6

REAR BRAKES
—Description ... 6
—Maintenance
—Brake fluid level ... 7
—Adjustments ... 8
—Brake shoes—To remove and refit ... 8 and 9
—Steady posts—To adjust ... 9
—Back plate—To remove and refit ... 10
—Wheel cylinders—To remove and refit ... 10
—To dismantle ... 10
—To reassemble ... 10

HYDRAULIC SYSTEM
—Bleeding the system ... 11
—Master cylinder—To remove and refit ... 11 and 12
—To dismantle ... 12
—To reassemble ... 13
—Flexible hoses—To remove and refit ... 13 and 14

SERVO UNIT
—Description ... 14
—Operating principles ... 17
—To remove ... 19
—To dismantle ... 20
—To reassemble ... 22
—To refit ... 22

BRAKE WARNING SYSTEM ... 23

MASTER CYLINDER AND FLUID RESERVOIR ... 23

GENERAL

DESCRIPTION

Girling type 17 disc brakes are fitted to the front wheels and Girling H.L.3 drum brakes to the rear wheels. All four brakes are hydraulically operated, pressure being generated in the master cylinder by application of the brake foot pedal. A vacuum-operated servo unit ensures light pedal pressures. The handbrake operates the rear brake shoes by an independent mechanical linkage.

PEDAL STOP

This consists of an adjustable rubber buffer fitted to the steering column. The pedal rests against the buffer when released.

To adjust Pedal Stop (see Fig. 1)

1. Screw back the rubber buffer to allow the pedal to return against its stop in the master cylinder. It is advisable to lift the pedal towards the rubber buffer to ensure that the master cylinder push rod is right back.
2. Screw down the rubber buffer so that it touches the pedal without compressing the rubber.
3. Screw down the buffer one more complete turn in the direction of the arrow "A".
4. Secure with the locknut.
5. Pedal free movement should not exceed $\frac{1}{4}$" (6 mm.) and it is essential that some clearance remains when this adjustment has been effected. Check that clearance exists after locking up.

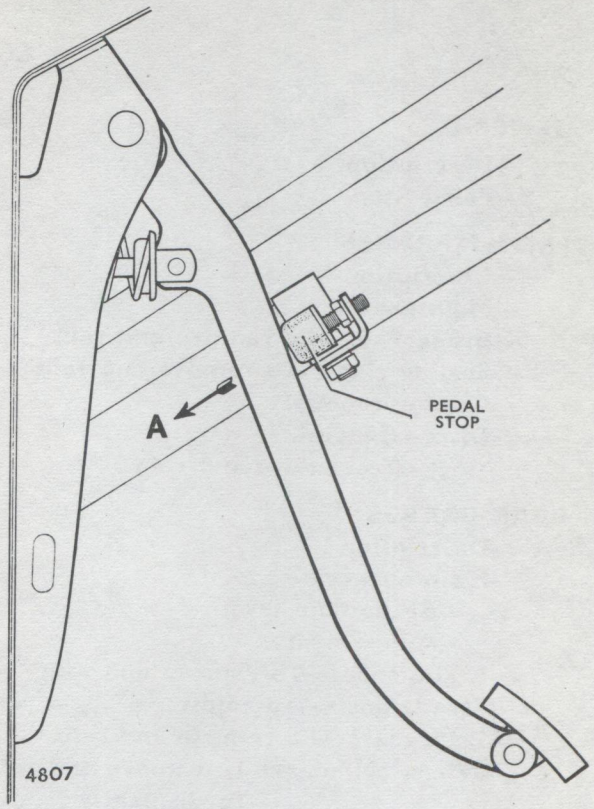

Fig. 1. *Brake pedal arrangement, showing pedal stop*

FRONT BRAKES

DESCRIPTION

Each brake consists of an 11$\frac{3}{8}$" (289 mm.) diameter high quality cast-iron disc which is attached to and rotates with the hub, and a cast-iron caliper which straddles the disc and is rigidly attached to the axle carrier. The caliper houses two hydraulic piston assemblies which operate a pair of wedge-shaped brake pads. The pistons are protected by dust covers. Sealing between the cylinders and the pistons is effected by rubber rings positioned in grooves in the body. A metal shield is fitted to protect the inner face of the disc against grit.

Upon application of the brake pedal, the hydraulic pressure generated in the system causes the co-axially aligned pistons to apply equal and opposite pressure by the friction pads on the rotating discs in direct proportion to the foot effort applied at the pedal.

When the pressure is released and the compression on the disc relieved, the pads and the pistons remain in position ready for the next application. In this manner adjustment for lining wear is automatically taken up and no manual adjustment is required.

No special driving technique is required with disc brakes, but after negotiating a ford or water splash, or when driving on flooded roads, it may be necessary to lightly apply the foot brake a few times

in order to dry out the brakes and hence restore full braking power. It is also advisable to do this after or during prolonged driving in wet weather, under circumstances where the brakes are not in use, such as may occur on motorways, etc.

MAINTENANCE

The brake pads and rubber seals should be inspected for damage or wear at regular intervals.

The minimum thickness to which the brake pads should be allowed to wear before being renewed is $\frac{1}{16}$ in. (1·59 mm.).

A regular check should be kept on the brake fluid level in the reservoir. (*See also under Rear Brakes—Maintenance*).

BRAKE PADS

To remove (See Fig. 3)

Jack up the front of the car and remove the road wheels.

On the rear of each caliper (17) there are two retaining pins (11) which are held in place by two clips (7). Remove the clips and withdraw the pins. In the case of Series III models only, shims (9 and 13) are fitted between the brake pads and pistons which must be withdrawn before removing the brake pads. Using a screwdriver, lever the brake pads (10 and 12) from their positions on either side of the discs.

To refit (See Fig. 3)

Before refitting the brake pads, the pistons (5 and 16) should be pushed with an even pressure to the bottom of their cylinder bores. A simple method of effecting this is to open the bleed screw one turn at the same time as the pistons are pushed inwards. Some fluid will be ejected.

Refit the brake pads (10 and 12).

Insert the anti-squeal shims (9 and 13), where applicable, between the front of each piston and the rear of each brake pad so that their tongues are facing outwards and the arrows on the tongues pointing upwards, towards the bleed screws.

Refit the retaining pins (11) and clips (7).

Pump the brake pedal until solid resistance is felt. Top up the master cylinder reservoir as required. Refit the road wheels. Lower and remove the jack and road test the car.

Bleeding of the brakes should be unnecessary after replacing the brake pads.

SEALING RINGS

General

If the rubber sealing rings are worn or damaged, they should be replaced immediately.

To remove (See Fig. 3)

Jack up front of car and remove the road wheels.

Disconnect the brake fluid hoses from the brake pipes and place an open container under the unions to collect the brake fluid. (See Flexible hoses—to remove and refit).

Undo the two bolts securing each caliper to the axle carriers. It should be noted that the bolts also partly secure the splash guards. Remove the caliper assemblies from the vehicle.

Clean off the dirt from the outside of the calipers, and remove the brake pads as previously described.

Withdraw the pistons (items 5 and 16) from the caliper bodies, and remove the dust covers (items 8 and 14).

Remove the sealing rings (items 6 and 15) by inserting a screwdriver under the seals and prising them out. Take great care not to damage the locating grooves.

No attempt should be made to remove the bridge bolts joining the two halves of the caliper. There is no point in doing so, and in addition, the torque figures to which the bolts are tightened are critical.

If, in an emergency, the caliper has been split and in the event of the fluid channel seal being undamaged, the caliper and caliper bolts should be thoroughly cleaned, dried and reassembled and the bolts tightened to the torque readings given below.

After reassembly the unit should be checked for fluid tightness under maximum pedal pressures.

It should be understood that this will only provide a temporary remedy, and the unit should be returned to the manufacturers for overhaul at the first opportunity.

Bridge bolt—inner	720 *lbs. in.* (830 *kg. cm.*)
Bridge bolt—outer	540 *lbs. in.* (622 *kg. cm.*)

SERIES II & III

To refit (see Fig. 3)

Thoroughly clean the caliper bores with methylated spirits and allow to evaporate, then lubricate the bores with clean brake fluid.

Carefully refit the rubber sealing rings (6 and 15) into the larger of the two grooves in each of the caliper bores.

Fit the dust covers (8 and 14) back into position with the projecting lips inserted into the smaller grooves in the caliper bores.

Insert the pistons, closed ends first, into the bores. Fit the outer lips of the dust covers into the grooves in the pistons.

Push the pistons to the bottom of their cylinder bores and refit the brake pads as previously described.

Refit the caliper assemblies into position and tighten up the bolts securing the calipers and dust shields to the axle carriers. Use a new lockplate.

Reconnect the brake fluid hoses. (See under "Flexible hoses—to remove and refit").

Bleed the brakes as described under "Bleeding the system".

CALIPER RENEWAL

The caliper bodies do not normally require to be renewed unless as a result of accidental damage.

The method of removing and refitting the calipers is given under "Sealing rings—to remove and refit".

DISCS

General

Excessive run-out on the discs will cause knocking back of the pistons which may create excessive pedal travel when the brakes are applied.

If the run-out is to be checked, hub end-float should first be eliminated by tightening the retaining nut, re-adjusting it at the end of the test. (See section "F", Front Hubs—to dismantle and reassemble).

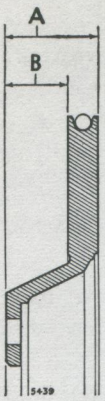

Fig. 2

After tightening the retaining nut, check that the hub can still be rotated.

A dial test indicator should then be clamped to the caliper body so that the stylus bears on the disc at a point approximately 1 in. (25·4 mm) from the outer edge. Revolve the disc and check the indicator reading; the maximum reading on the gauge should not exceed 0·004 in. (0·10 mm).

If the disc has suffered damage or has become excessively scored it should be replaced. However, if replacement of the disc is not possible, then re-grinding is the only alternative. Extreme care should be exercised in carrying out this operation since incorrect grinding can seriously affect the efficiency of the brake. As a rule, it would be advisable to have the grinding carried out by a firm that specialises in this type of work. The machining limits, given below, should not be exceeded under any circumstances.

The maximum that can safely be removed from either side of the disc is 0·020 in. (0·51 mm); with reference to Fig. 2, dimension "A" should not be *less* than 1·499 in. (38·07 mm) and dimension "B" not *more* than 1·035 in. (26·29 mm).

The ground surface should be flat with a fine finish, and parallel to the mounting face.

To remove

Jack up the front of the car and remove a road wheel.

Disconnect the brake fluid hoses from the brake pipes. (See under "Flexible Hoses—to remove").

Remove the caliper assembly which is secured to the axle carrier by two bolts. This will partly release the dust shield at the same time.

Remove the hub as described in Section "F" of this manual.

SERIES II & III

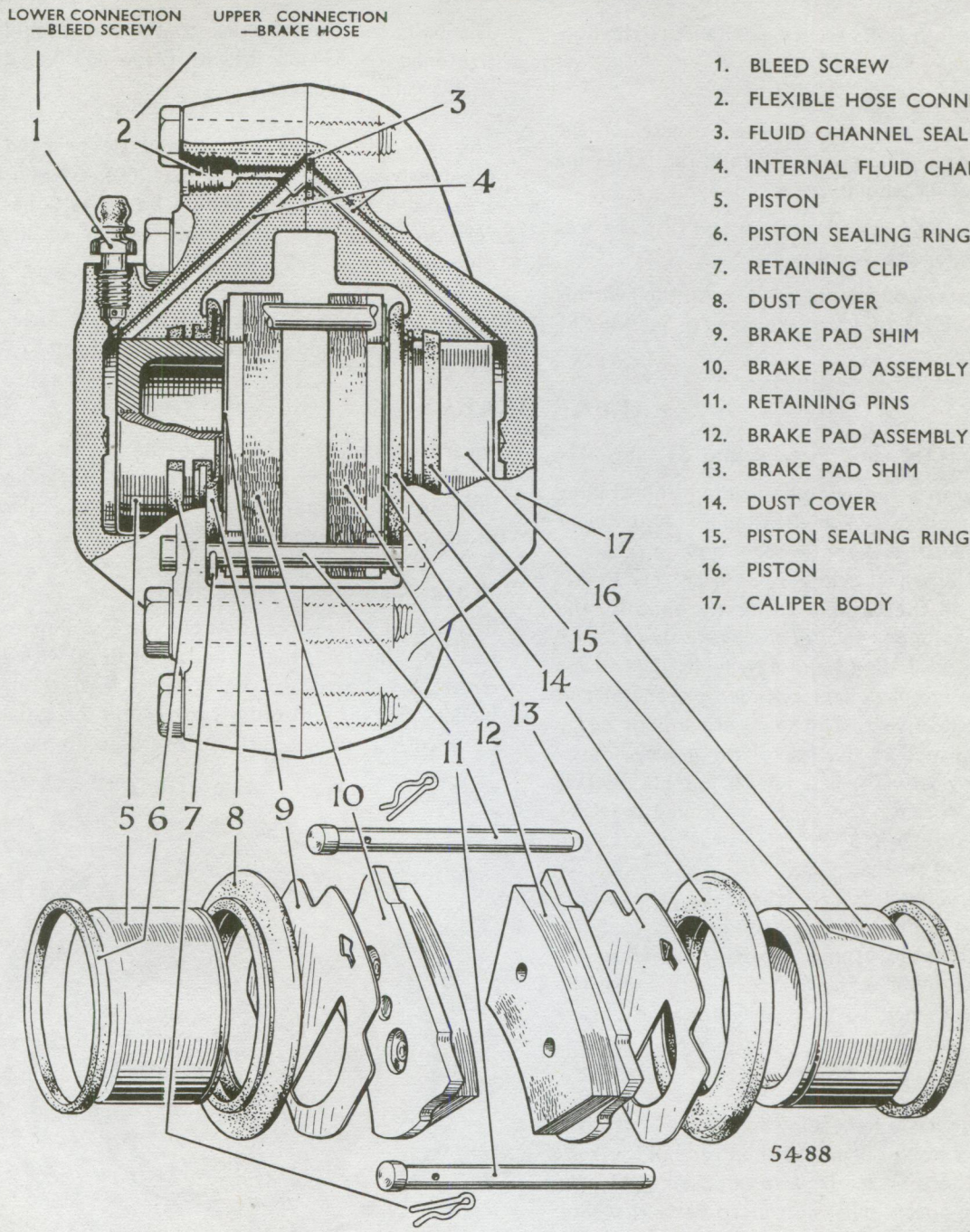

1. BLEED SCREW
2. FLEXIBLE HOSE CONNECTION
3. FLUID CHANNEL SEAL
4. INTERNAL FLUID CHANNELS
5. PISTON
6. PISTON SEALING RING
7. RETAINING CLIP
8. DUST COVER
9. BRAKE PAD SHIM
10. BRAKE PAD ASSEMBLY
11. RETAINING PINS
12. BRAKE PAD ASSEMBLY
13. BRAKE PAD SHIM
14. DUST COVER
15. PISTON SEALING RING
16. PISTON
17. CALIPER BODY

Fig. 3. *Caliper assembly, exploded view*

SERIES II & III

Remove the four bolts securing the disc to the hub.

To refit

The refitting procedure is the reverse of the removal procedure given above. The following points, however, should be noted:—

Ensure that the faces of the hub and disc are free from dirt before reassembling.

Particular attention should be given to the refitting of the hub, details of which are given in Section "F" of this manual.

The bolts securing the disc to the hub should be tightened to 53—58 lbs. ft. (733—802 kg. cm.) with a torque spanner.

The run-out on the disc should be checked as previously described. If the reading is beyond the accepted limit, the disc should be repositioned in relation to the hub until a satisfactory reading is obtained.

It will be necessary to bleed the brakes after re-assembly. (See under "Bleeding the System").

REAR BRAKES

DESCRIPTION (See Figs. 4 and 5)

The rear brakes incorporate leading and trailing shoes operated by a wheel cylinder. Adjustment for lining wear is by a wedge type mechanical adjuster. The wheel cylinder, on each rear brake, is situated on the backplate directly opposite the adjuster. The upper ends of the brake shoes locate in the adjuster links (8 and 12), whilst the lower ends locate in the wheel cylinder piston (6) and body (4) respectively. The shoes are supported by platforms formed in the backplate, and by adjustable steady posts (14) fitted with felt bushes (13) to retain lubricant. The shoes are linked together by return springs (10 and 11), situated between shoe webs and the backplate.

When hydraulic pressure is applied, the piston operates the leading shoe and the cylinder body (4) reacts by sliding on the backplate to operate the trailing shoe. When the pressure is released, the shoes are returned to their original positions by the return springs.

Adjuster (See Fig. 5)

The adjuster has a light alloy housing (7) which is spigoted and bolted firmly to the inside of the back plate. The housing carries two opposed steel links (8 & 12) the outer ends slotted to take the shoe flanges, and the inclined inner faces bearing on inclined faces on the hardened steel wedge (9) the axis of which is at right angles to the links. The wedge has a finely threaded spindle and a square end which projects on the outside of the back plate. By rotating the wedge in a clockwise direction the links are forced apart and the fulcrum of the brake shoes expanded.

Wheel Cylinders (See Fig. 5)

Each wheel cylinder consists of a die-cast aluminium body (4) containing seal (5) and a piston (6) with dust cover (17) secured to the body by a clip (16). A bleed screw (3) is also incorporated in the cylinder body with a rubber dust cap over the nipple end.

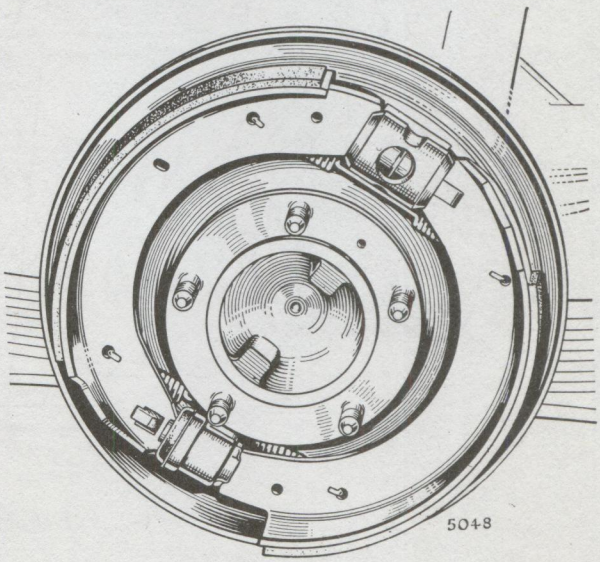

Fig. 4. *Rear brake assembly—right-hand side illustrated*

A spring plate (1) and retaining plate (19) hold the wheel cylinder in position on the back plate but allow the body to slide for centralising purposes.

Handbrake

A cable linkage connects the handbrake lever to levers (18) housed in each rear wheel cylinder which operate the leading shoes. The trailing shoes are operated by reaction through the wheel cylinder bodies which slide in the back plates.

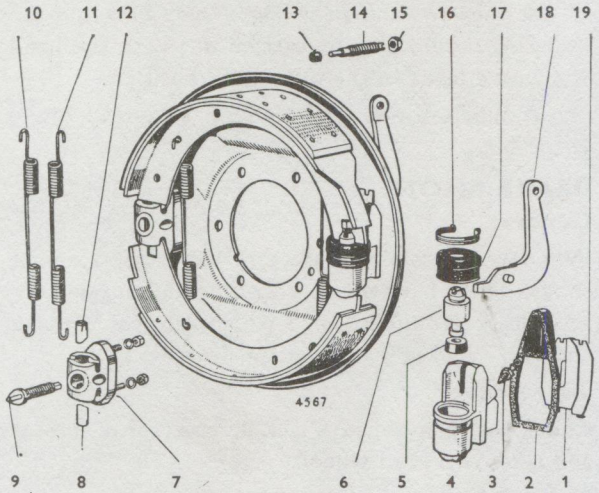

1. SPRING PLATE
2. DUST COVER
3. BLEED SCREW
4. CYLINDER BODY
5. SEAL
6. PISTON
7. HOUSING
8. LINK
9. WEDGE
10. RETURN SPRING
11. RETURN SPRING
12. LINK
13. FELT
14. STEADY POST
15. LOCKNUT
16. DUST COVER CLIP
17. DUST COVER
18. LEVER
19. RETAINING PLATE

Fig. 5. *Exploded view of rear brake*

MAINTENANCE (See also under "Front Brakes—Maintenance")

Brake fluid level

The fluid level in the master cylinder reservoir should be checked regularly and should be kept to within ½" (12 mm.) of the filler cap orifice. However, never fill completely since the expansion of the fluid in hot weather may cause the brakes to build up and the shoes to bind. The addition of fluid will be required at regular intervals due to the repositioning of the front wheel pistons as a result of friction lining wear, but a rapid fall in fluid level would indicate a leak at some point in the system which should be traced and rectified.

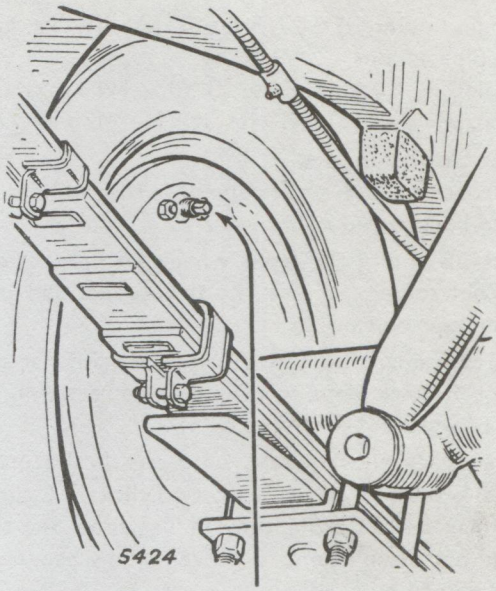

Fig. 6. *Rear brake adjustment*

To check for leaks, apply a firm pressure to the brake pedal whilst an assistant examines the units, pipes, hoses and fittings.

Before removing the filler cap to top up, clean the area around the filler cap to prevent dirt entering the reservoir. Ensure that the air vent in the filler cap is not choked; blockage at this point would cause the brakes to drag.

Use only the specified type of brake fluid for replenishment purposes. (See Section P).

The brake hoses should be checked at regular intervals for leakage, chafing and general deterioration. If there is any doubt replace the hoses. It is advisable in any case to replace the hoses every five years. For removal instructions see under "Flexible Hoses—to remove and refit".

It is also advisable to occasionally check for tightness the brake mounting bolts and hydraulic unions. It is important not to overtighten unions, since this may very easily result in stripped threads. The specified torque figures for the bleed screws and pipe unions are as follows:—

Bleed screws
(conical pointed) 5—7·5 lbs. ft. (70—104 kg. cm.)
Feed pipe unions
(male) 7—8 lbs. ft. (97—111 kg. cm.)
(female) 8—10 lbs. ft. (111—138 kg. cm.)

Brake Adjustments

The front brakes are self adjusting; the rear brakes should be adjusted as follows:—

Chock up one of the front wheels to prevent the car from rolling, release the handbrake, and jack up one rear wheel.

Turn the square headed adjuster, situated at the rear of the back plate, in a clockwise direction until solid resistance is felt (see Fig. 6).

Slacken back the adjuster until the brake drum is able to rotate freely (usually two clicks). A slight drag may be felt from the trailing shoe but this should not be sufficient to prevent the wheel from being turned by hand.

Spin the wheel and apply the brakes hard to centralise the shoes in the drum and re-check adjustment. Repeat for the other rear wheel.

Adjustment of the rear brakes will automatically adjust the handbrake. If, however, with the rear brakes in correct adjustment there is excessive hand brake free travel, adjust the hand brake as follows:—

Jack up both rear wheels and lock shoes by means of the adjusters. With the hand brake off, adjust the cable length so that the slack is taken out of the linkage. Adjustment is carried out by rotating the screwed sleeve at the front end of the inner cable (immediately to the rear of the hand brake lever—under the car) after slackening its locknuts (see Fig. 7).

Tighten locknuts when adjustment is correct. Release shoe adjusters until wheels are free.

The above adjustment should also be carried out if a new long cable has been fitted.

If a new short cable is being fitted, adjustment at the jaws shown in Fig. 7 may be required. This should also be carried out with the hand brake lever in the fully "off" position.

A lubricator is provided on the hand brake cable.

BRAKE SHOES

General

Whenever possible, fit factory-lined replacement shoes. These have the correct type of lining and are accurately ground to size which ensures a quick and easy "bed in" to the drums.

To remove

Chock the front wheels, jack up the rear of the car and remove a road wheel.

Slacken off all available shoe adjustment by rotating square-headed adjuster anti-clockwise. (See Fig. 6).

Remove the countersunk screw securing the brake drum to the hub and remove drum.

Pull the leading (rearmost) shoe away from the expander piston and then lift the other end of the shoe out of the slot in the adjuster link.

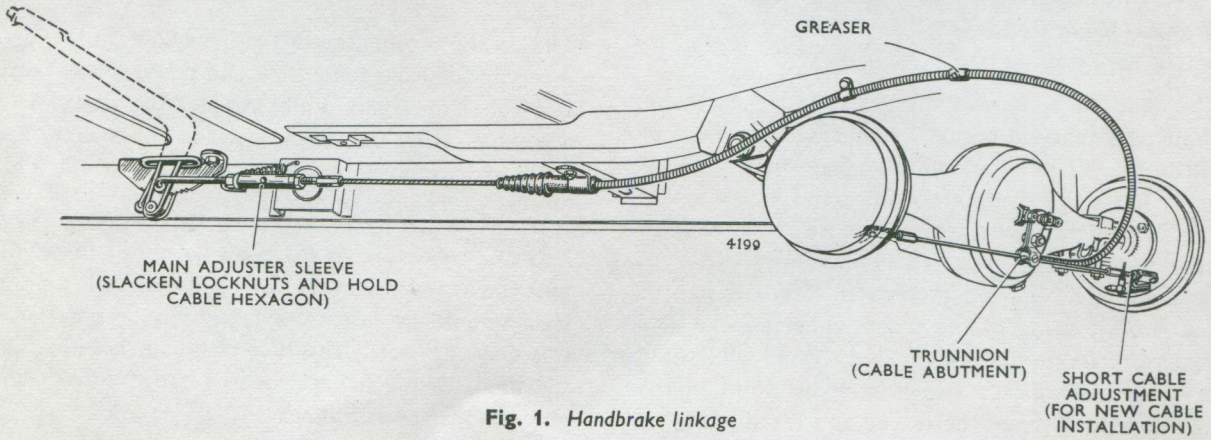

Fig. 1. *Handbrake linkage*

Disconnect the return springs and remove the shoes. The two springs are identical.

Repeat the above operations for the opposite rear wheel.

To refit

Smear the tops of the steady posts and the operating and abutment ends of the new shoes with (white) brake grease. Keep all grease off the linings and do not handle the linings more than necessary.

Pair the brake shoes; the leading shoe has the lining positioned towards the adjuster end and the trailing shoe has the lining positioned towards the wheel cylinder end in both left-hand and right-hand brake assemblies (see Fig. 4).

Fit the pull-off springs to the underside of the shoes. Position the trailing (foremost) shoe on the back of the wheel cylinder and on the adjuster tappet. Pull the leading shoe outwards and ease it on to the slots in the wheel cylinder piston and the adjuster tappet.

Refit brake drum, ensuring that it is clean and free from grease or oil, and secure with the set screw.

Refit road wheel.

Adjust the brakes as previously described. Immediately after fitting replacement shoes it is advisable to slacken one further click to allow for possible lining expansion, reverting to normal adjustment afterwards.

Several hard applications of the pedal should be made to ensure all the parts are working satisfactorily and the shoes bedding to the drums.

Repeat the above operations on the opposite rear wheel. Lower the jack and test.

Refit road wheels, lower the jack and test.

Note

If replacement brake shoes have been fitted or if there is any question of uneven wear across the width of the brake linings the brake shoe steady posts should be adjusted as subsequently described.

STEADY POSTS

The steady posts, one for each shoe, are threaded in the back plate and should contact the underside of the brake shoe web. The end of the steady post, accessible at the rear of the back plate, is provided with a screwdriver slot and lock nut. The object of the steady posts is to hold the shoes square with the drum when in the off position. This is important to obviate any loss of travel. The shoes must be ready to contact the drum immediately without tilting and with a minimum of travel.

To adjust (see Fig. 8)

To ensure correct location between shoes and drum:—

1. Loosen the lock nut.
2. Unscrew (screwdriver in slot) the adjustable steady post two turns anti-clockwise.

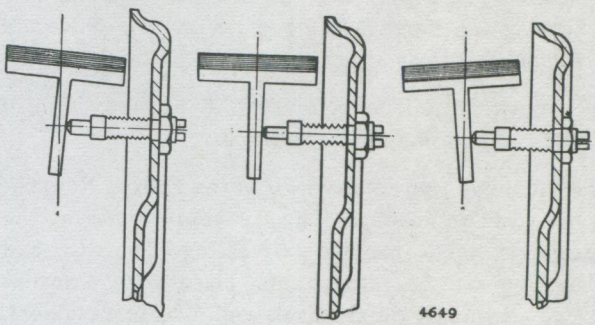

Fig. 8

3. Adjust shoes to the drum with the normal shoe adjusters on the rear, until the drum cannot be turned.
4. Turn the steady post clockwise until it just contacts the shoe. Feel it touching the shoe, it must not be hard on.
5. Tighten the lock nut.
6. Adjust shoes by releasing the rear adjusters to give correct clearance between shoe and drum.

SERIES II & III

BACK PLATE

To remove and refit

Jack up car and remove road wheel. Slacken off all available shoe adjustment by rotating square-headed adjuster anti-clockwise. Remove the countersunk screw and withdraw brake drum.

Disconnect handbrake-operating cable fork from lever on backing plate by removing clevis pin. Note position of washers.

Release brake pipe connections from backing plate.

Protect brake pipe connections against the ingress of foreign matter. Remove nuts and bolts securing brake backing plate to flange on axle casing.

Draw out driving shaft complete with brake backing plate and hub bearing, using Churchill Tool No. RG.16 (see also Section "G"). Secure the tool to the hub by means of the road wheel nuts and drive the sliding weight smartly away from the vehicle. *Do not attempt to drive out the shaft by striking the brake backing plate, as this procedure can only cause damage.*

Remove the oil deflector (Fig. 1, Section "G"), if this is not dislodged by the shaft.

Refitting is a direct reversal of the above. Remember to fit the conical deflector before entering the shaft assembly into the axle casing. The shaft and bearing can be tapped into place with a mallet (see also notes on Oil Seals and Grease Retainers, Section "G").

Bleed the brakes as described under "Bleeding the System".

WHEEL CYLINDERS

To remove

Remove the rear brake shoes as described previously.

At the rear of back plate remove the clevis pin securing the hand brake cable to the operating link which protrudes through the back plate.

Unscrew the metal pipe union from the rear of wheel cylinder.

Unscrew the bleeder valve from the wheel cylinder.

Remove dust cover from rear of back plate and, using a screwdriver, prise retaining plate and spring plate apart; then pull retaining plate from beneath the neck of the wheel cylinder.

Withdraw the handbrake cable lever from its position between the back plate and wheel cylinder. Remove the spring plate and finally the wheel cylinder from the back plate.

To refit

Refitting is a reversal of the removal procedure. Reference should be made to "Brake Shoes—To refit" when refitting the brake shoes.

Particular care should be taken not to over-tighten the pressure pipe unions when reconnecting them to the wheel cylinders, since this will result in stripped threads (see under "Maintenance").

It will be necessary to bleed the hydraulic system after assembly as described under "Bleeding the system".

To dismantle

Remove the wheel cylinder from the backplate as previously described.

Release the clip and remove the rubber dust cover.

Remove the piston complete with rubber seal. This operation may be simplified by applying gentle air pressure to the fluid pipe connection.

Remove the seal from the piston.

To reassemble

Reassembly is the reverse of the dismantling procedure.

Make sure that all parts are free from dirt. Clean with brake fluid.

Ensure that the rubber seal is fitted with the lip or widest end of the seal facing the blank end of the cylinder. (See item 5, Fig. 5).

SERIES II & III

HYDRAULIC SYSTEM

GENERAL

Great cleanliness is essential when dealing with any part of the hydraulic system, and especially so where the brake fluid is concerned. Dirty or aerated fluid must never be added to the system.

Use only the specified type of brake fluid for topping up the reservoir (see Section "P").

BLEEDING THE SYSTEM

"Bleeding" (expelling air) the hydraulic system is not a routine maintenance operation, and should only be necessary when a portion of the hydraulic system (including the vacuum servo unit) has been disconnected or if the level of the brake fluid has been allowed to fall so low that air has entered the master cylinder.

Always keep a careful check on the reservoir during bleeding since it is most important that a full level is maintained. Should air reach the master cylinder from the reservoir the whole of the "bleeding" operation must be repeated.

Two people are required to carry out the "bleeding" operation.

Procedure

With all the hydraulic connections secure and the reservoir tank topped with fluid, remove the rubber cap from the nearside rear wheel cylinder bleed nipple and fit the bleed tube immersing the free end of the tube in a jar containing a little clean brake fluid.

Unscrew the bleed nipple three-quarters of a turn, operate the brake pedal with full stroke allowing the return stroke to be as quick as possible, any check to the return of the pedal or master cylinder plunger, will prevent effective bleeding. Actuate the brake pedal in this manner until the fluid entering the jar is completely free of air bubbles, and tighten up the bleed screw. Make sure that the bleed screw is fully tightened before the pedal reaches the end of its stroke.

If the vacuum servo unit has been disconnected or removed, the column of air expelled at the wheel cylinder bleed screws will be in excess of that normally encountered.

This process must now be repeated for the bleed screw at each of the three remaining brakes, finishing at the wheel nearest the master cylinder.

Top up the reservoir to its correct level of $\frac{1}{2}$" (12 mm.) below the filler cap orifice.

Care should be taken not to over-tighten the bleed screws since this may very easily result in stripped threads (see under "Rear Brakes—Maintenance").

MASTER CYLINDER

Description (see Fig. 9)

The master cylinder is situated under the bonnet on the bulkhead immediately in front of the brake pedal. When pressure is applied to the brake pedal, the plunger (5) moves up the bore of the cylinder and the valve seal (13) closes the port to the reservoir.

The valve is held initially on its seat by spring washer (12) and by fluid pressure in the drilling at the back of valve stem (1). As the plunger (5) continues to move up the bore, fluid is forced through the pipe line to the wheel cylinders. On the return stroke the plunger moves back down the bore, and with the final movement of the plunger the seal (13) is lifted from its seat allowing free flow of fluid between the master cylinder and wheel cylinder.

To remove

Disconnect the pressure pipe union from the cylinder, collecting any escaping fluid in a suitable container.

Remove clevis pin from pedal at the push rod location.

Remove the two bolts securing the master cylinder to the bulkhead and remove by easing it forward, noting the position of the packing.

SERIES II & III

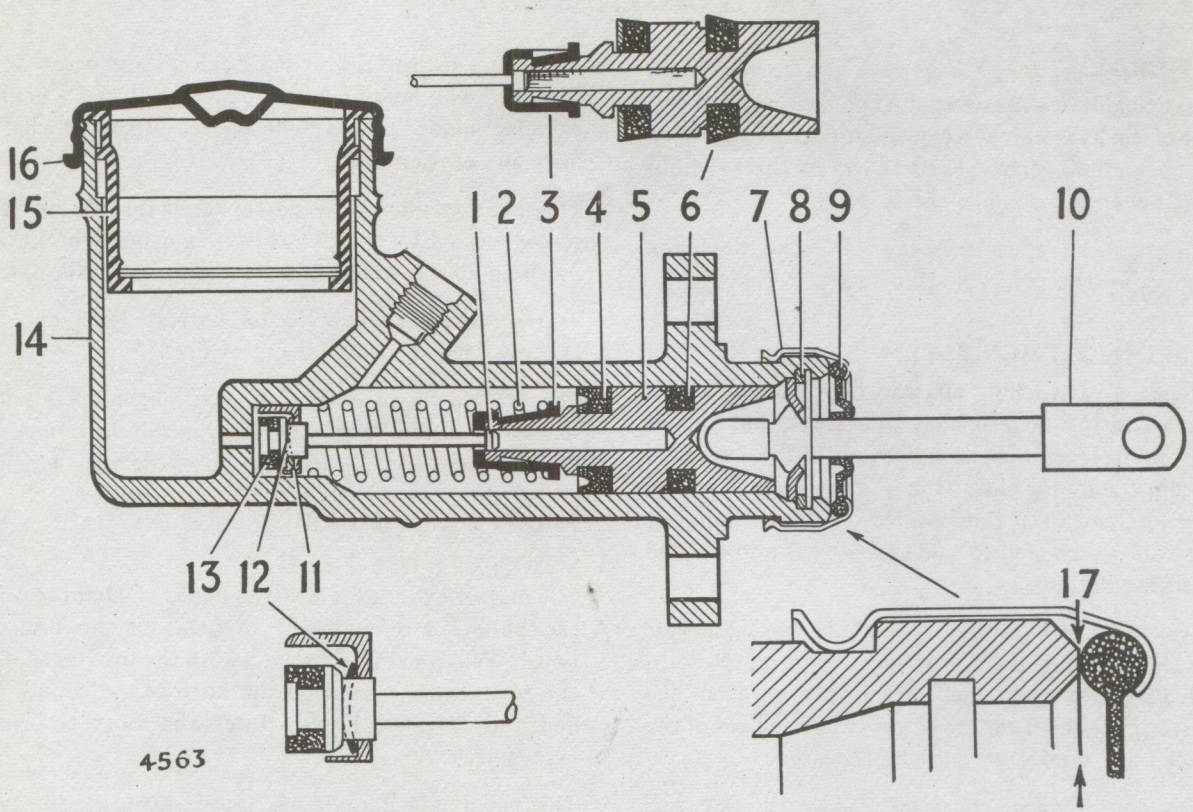

1. VALVE STEM
2. PLUNGER RETURN SPRING
3. THIMBLE
4. PLUNGER SEAL
5. PLUNGER
6. PLUNGER SEAL (OMITTED FROM LATER MASTER CYLINDERS)
7. DUST COVER RETAINER
8. CIRCLIP
9. DUST COVER
10. PUSH ROD AND DISHED WASHER
11. VALVE SPACER
12. SPRING WASHER
13. VALVE SEAL
14. BODY
15. FILTER
16. FILLER CAP
17. DUST COVER, FIT ON BODY

Fig. 9. *Sectional view of master cylinder*

To refit

Refitting is a reversal of the above instructions.

Care should be taken not to over-tighten the feed pipe unions (see under "Rear Brakes—Maintenance" for the torque figures).

After refitting, the brakes should be bled as described under "Bleeding the system".

To dismantle (see Fig. 9)

Remove the master cylinder from the car as previously described.

Clean off all dirt and grease from the outside of the master cylinder.

Drain the residue brake fluid from the master cylinder and reservoir into a clean container.

Slip the return spring cap from beneath the neck of the push rod (10) to release the return spring.

Remove the dust cover retainer (7) which is crimped in place to release the dust cover (9).

Remove the circlip (8) with a pair of long nosed pliers, thus releasing the push rod and dished washer (10).

When the push rod assembly has been removed, the end of the plunger (5) will be exposed. Remove the plunger assembly; this operation can be simplified

by inserting a low pressure air nozzle in the fluid outlet port.

Separate the thimble (3) and return spring (2) from the plunger by levering the thimble leaf over the shouldered end of the plunger.

Depress the plunger return spring and slide the valve stem (1) through the elongated hole of the thimble.

Remove the thimble and return spring from the valve assembly.

Detach the valve spacer (11) taking care not to lose the spacer spring washer (12) which is located under the valve head.

Examine all parts, especially the seals, for wear or distortion and replace with new parts where necessary.

To reassemble (see Fig. 9)

It is essential that all parts are meticulously cleaned with brake fluid before reassembly. Do **not** use petrol, paraffin, trichlorethylene or any other similar cleaning agents to wash the parts.

Replace the valve seal (13) so that the flat side is correctly seated on the valve head. The spring washer (12) should then be located with the dome side against the underside of the valve head, and held in position by the valve spacer (11), the legs of which face towards the valve seal.

Replace the plunger return spring (2) centrally on the spacer, insert the thimble (3) into the spring and depress until the valve stem engages through the elongated hole of the thimble, making sure the stem is correctly located in the centre of thimble.

Check that the spring is still central on the spacer (11)

Refit plunger seals (4 and 6) onto the plunger (5) with the projecting lips facing towards the thimble (3) as shown in the inset. Seal (6) is omitted from later master cylinders.

Insert the reduced end of plunger into the thimble until the thimble engages under the shoulder of the plunger. Press home thimble leaf.

Smear the plunger well with rubberproof grease (red) and insert the assembly into the bore of cylinder, valve end first, easing the plunger seal lips over the edge of the bore.

Refit the push rod assembly (10) into the cylinder, followed by the circlip (8) which engages into a groove machined in the cylinder body.

Replace the rubber dust cover (9) and recrimp the retainer (7) into position.

Refit the master cylinder to the car as previously described.

Bleed the brakes as described under "Bleeding the system."

Test.

FLEXIBLE HOSES

To remove (see Fig. 10)

Disconnect the metal fluid pipe by unscrewing the union nut from the hose union.

Hold the hexagon of the flexible hose end sleeve at one side of the support bracket, unscrew the lock nut from the other side and release the pipe.

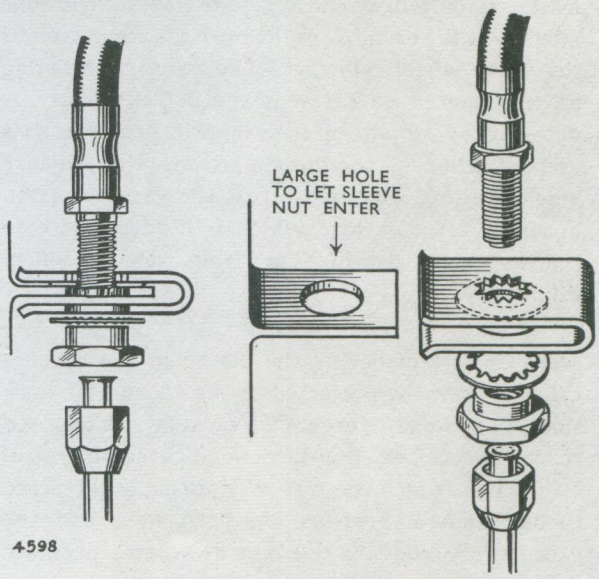

Fig. 10. *Flexible hose connection*

Unscrew the hose at the other end, allowing the hose to rotate.

Do not attempt to clear the bore of a flexible hose by probing. If a hose is choked or perished fit a replacement.

To refit

Refitting is a reversal of the above procedure.

When refitting the flexible hose at the support bracket end, ensure that the hose does not twist by holding the hexagon of the end sleeve with a spanner whilst tightening the lock nut. For the specified torque figures see under "Rear Brakes—Maintenance".

After refitting the hose(s) it will be necessary to "bleed" the hydraulic system as previously described.

THE VACUUM SERVO UNIT

Description (see Fig. 12)

The object of the unit is to reduce the effort required at the brake pedal to produce a certain amount of braking in a hydraulic brake system and this is achieved by increasing the pressure applied to the brake wheel cylinders over that developed by the master cylinder.

The unit is installed in the hydraulic braking system between the master cylinder and the wheel cylinders; that is to say the outlet pipe from the master cylinder is connected to the Servo hydraulic inlet and the Servo hydraulic outlet is connected to the brake wheel cylinders. The Servo or assisting force, required to augment the driver's effort, is obtained by admitting atmospheric pressure to a vacuum cylinder containing a piston. The pressure difference thus obtained across the vacuum piston produces a thrust load which is used to increase the hydraulic pressure available at the wheel cylinders.

The principle of having the piston in the vacuum cylinder normally subjected to the vacuum on both sides is known as "Suspended Vacuum", as opposed to the "direct" or "non-suspended" vacuum type of cylinder, in which the piston is normally subjected to atmospheric pressure on both sides and the vacuum is introduced to one side when a pressure difference is required.

Construction of the Vacuum Servo (Fig. 11)
The Servo may be considered in three sections:—

(1) The Hydraulic Output Cylinder, from which the pressure is applied to the brakes (22, Fig. 11).

(2) The Vacuum Cylinder, which supplies the force required to operate the hydraulic output cylinder (30, Fig. 11).

(3) Valve Control Gear, which regulates the actions of the other two sections, in order to produce the required relationship between input and output pressures (see Fig. 13).

The Hydraulic Output Cylinder is housed within the lower bore of the cast aluminium alloy body. It contains a hardened steel piston (23) and return spring (21) which are retained by a spacer washer and circlip Additionally there is a moulded nylon spacer (25) one end of which is inserted into a gland seal (27). The spacer (25) thus causes the outer lip to press against the walls of the cylinder.

A hardened steel bush (28) guides the piston rod (29) and its outside diameter aligns the vacuum and hydraulic cylinders.

The Vacuum Cylinder section of the unit consists of a pressed steel cylinder (30) in which slides

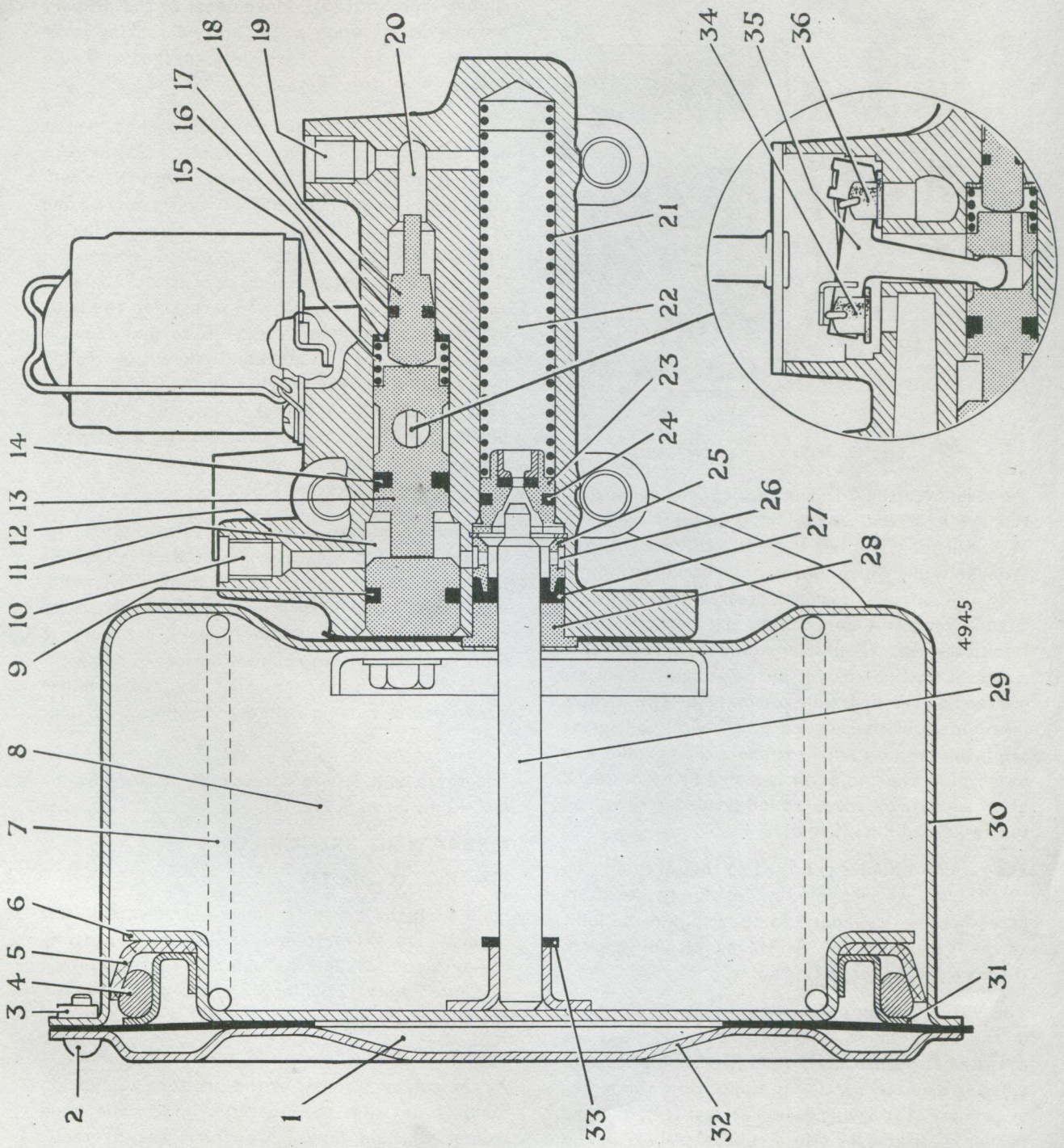

Fig. 11. *Section through servo unit*

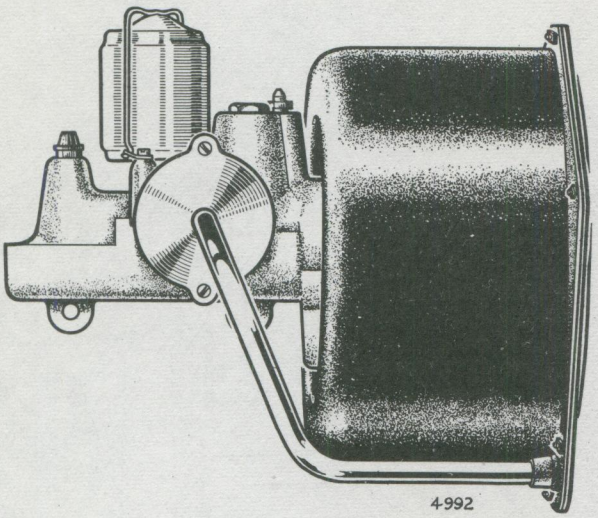

Fig. 12. *Servo unit assembly*

the vacuum piston (6). This carries a leather seal (5) retained by a steel ring which is an interference fit on the piston. The seal is held in contact with the cylinder wall by a sponge rubber backing ring (4). Both cylinder and seal are treated during manufacture, rendering unnecessary any further lubrication in service. The piston rod (29) is pressed into a ferrule on the vacuum piston (6); this transfers the load to the hydraulic piston (23). The vacuum piston assembly is retained by a helical coil spring (7) in the position where it abuts the cylinder end cover (32). The end cover is sealed by a gasket and held in place by seven round-headed screws and square-headed nuts (2 and 3).

The vacuum cylinder is bolted to the servo unit by three bolts with a flexible composition gasket interposed between cylinder and body to seal the joint at the vacuum port. A flanged clamping plate stiffens the cylinder at this point.

The Valve Control Gear occupies the upper bore in the servo body (12) and the valve chest. It consists of two hardened steel hydraulic pistons of differing diameters acting in opposition, the larger or primary (13) having a rubber seal (14), and the smaller or secondary (18) a rubber seal (17). The control bore is sealed by a plug carrying another rubber taper seal (9). Movements of the primary piston (13) act upon a "T" shaped rocking lever (35), the centre leg of which is engaged in a side hole in the piston.

Two nylon valves (34 and 36) are attached, one at each end of the "T" lever cross piece (35) by clips which in addition serve as pivots. With the movement of the piston (13), the "T" lever pivots on one of the valves and opens the other (according to which direction the piston moves). The action of the valves is restrained by a flat "U" shaped spring, the ends of which are secured to the body by two round-headed screws. Excessive sideways movement of the "T" piece and valves is controlled by a slotted bracket which is also secured to the body by screws. A helical coil spring (15) fitted behind the primary piston provides bias to keep the vacuum valve normally open. This spring is seated upon a Belleville washer (16).

A vacuum pipe extends from the valve chest to the vacuum cylinder end cover. At the valve chest it is riveted to the centre of a moulded nylon lid, which itself has an interference fit in the valve chest to provide a seal. As an additional precaution the lid is retained by two round-head screws and locking washers. The vacuum pipe fits into a rubber sleeve in the vacuum cylinder making an airtight seal.

The servo unit is also fitted with an air cleaner. (See items 8 and 9, Fig. 14).

OPERATING PRINCIPLES

(See figs. 11 and 13)

Fluid from the master cylinder outlet enters inlet (item 10, Fig. 11) on to cavities (11) and (26) passing the push rod (29) and through hole in servo piston (23) into cavity (22) filling operating valve piston chamber (20) on to outlet (19) to the wheel cylinders.

At the commencement of the pressure application building up from the master cylinder, the fixed volume of fluid flows throughout the hydraulic system maintaining equal pressure wherever (and

through whatever shape) it goes. There is movement of this fixed volume to expand the shoes to the drum. When the movement is continued, higher pressure may be obtained in the system from master cylinder to wheel cylinder. It is during the increase of pressure from the master cylinder that the servo functions.

The increase in pressure acts on the large area of primary valve operating control operating piston (13) in chamber (11), and there is equal pressure increase on the lesser area of secondary valve operating piston (18), shown in Fig. 11. The resultant effect is for the two pistons to be moved in the direction of chamber (20).

The cavity (8) is connected to the front of the large servo piston (6), and to the induction manifold direct. Between the servo and the induction manifold, a non-return valve is required to prevent damage to the servo in the event of a backfire and also to prevent the passage of petrol to the servo (see Fig. 15).

The rocker valve chamber is connected to the back of the servo piston (1) by Bundy tubing. Cavities (8) and (1) have a through passage by the valve (34) being off the seat and this allows any depression from the induction manifold to be equal on each side of the servo piston (6).

With increase of pressure in the hydraulic line, valve operating piston (13) moves towards the chamber (20). This movement is conveyed to the lever (35) and closes the nylon valve (34). If the pressure applied to the brake pedal were very light and remained constant, the movement of the operating piston would be sufficient to close valve (34), but not enough to open valve (36); no change beyond the valve closing would therefore occur, i.e. the closing of this valve would separate the two cavities (8) and (1), both still remaining under depression.

On increasing the pedal effort to obtain a higher hydraulic line pressure, operating valve piston (13) with lever (35) will move further and open valve (36), connecting the back of the servo piston (6) to cavity (37) which is directly open to atmosphere via air cleaner. (Valve (34) remains on the seat).

Thus the cavity to the back of the servo piston (6) is subject to atmospheric pressure, while the front section of the servo piston (6) in cavity (8) is still subjected to depression. Force is thus exerted on piston rod (29).

The force moves the piston rod (29) closing the fluid passage between the rod and servo hydraulic piston (23). This causes pressure to build up in cavity (22) and on to the wheel cylinders. Two hydraulic line pressures are thus created:—

(*a*) The lower pressure from the master cylinder on the valve-operating piston (13) in chamber (11) and on the back of hydraulic servo piston (23) in chamber (26).

(*b*) The higher pressure caused by the pressure difference between the two sides of the vacuum cylinder and which has effect in cavities (22), (20) and (19).

The increase of pressure obtained with valve (34) being open, remains until the pressure in chamber (20) on the secondary valve operating piston area is greater than the pressure in chamber (11) on the primary valve operating piston area. The pressure will then move the lever (35) to return the valve (36) on to the seat of the body, so that both valves are closed.

At the back of servo piston (6) atmosphere remains, and the depression is in cavities (8) and in front of servo piston (6). In the hydraulic system, pedal pressure remaining constant, the higher pressure at (20) which closed valve (36) against the lower pressure at (11) remains static, so giving a constant line pressure to the wheel cylinder. This line pressure is determined by the effort on the pedal which commenced the movement to open the valve (36). Assistance is only obtained when the valve (36) is open.

The stoppage of atmosphere when valve (36) closes retains the vacuum servo piston (6) with pressure on one side and depression on the other.

Increase of pedal effort will raise the low pressure

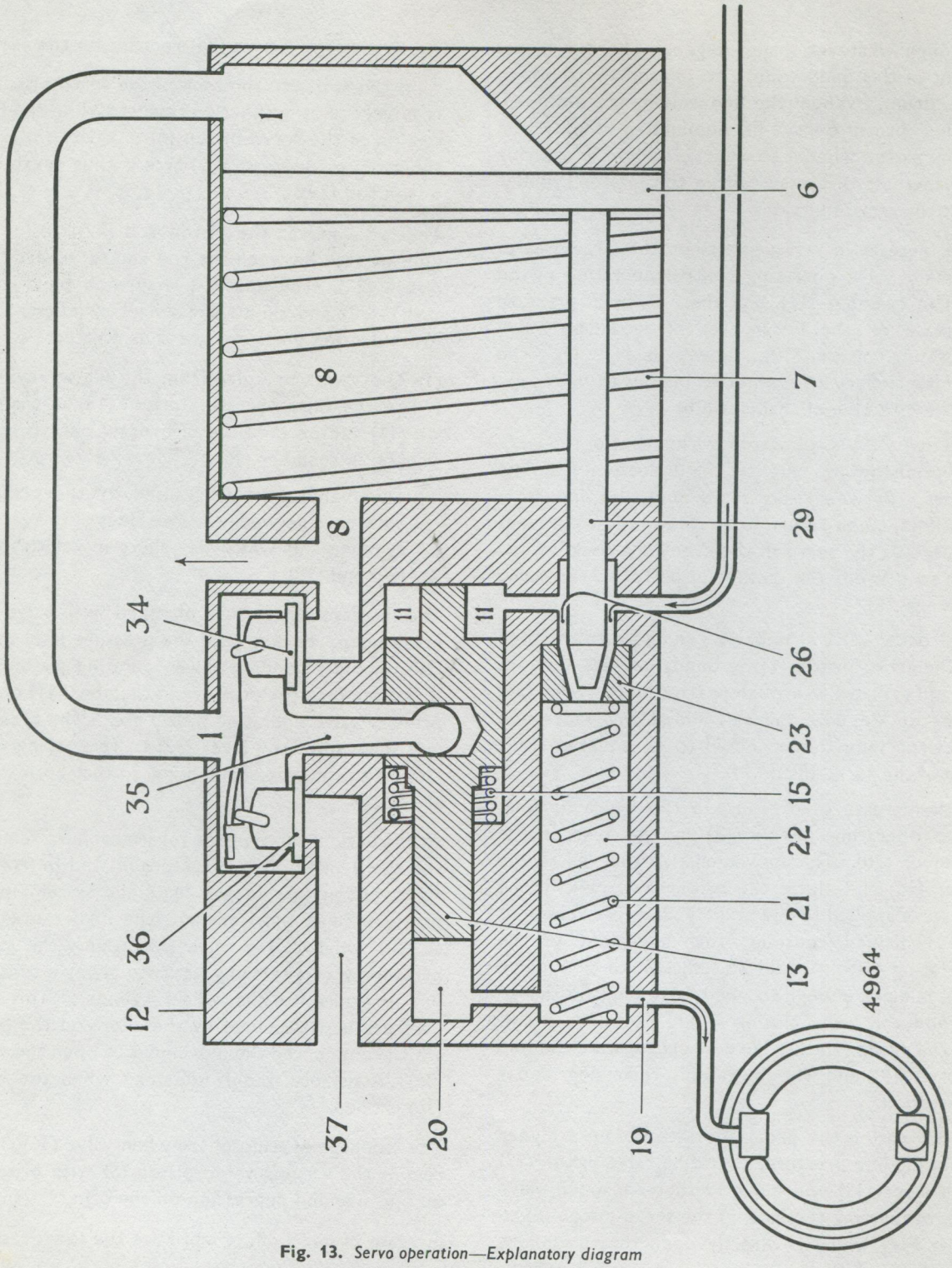

Fig. 13. *Servo operation—Explanatory diagram*

side of the hydraulic system, at the same time giving slight assistance to the high pressure side, i.e. on piston area (23). When the force on the primary valve operating piston again becomes greater than the force on the secondary valve operating piston, then the pistons will tend to move towards chamber (20) and reopen valve (36). This will actuate the piston (6) as previously described.

On piston rod (26) attached to vacuum servo piston (6) is a washer (33) which prevents tilting or damage should the servo reach the end of its travel due to insufficient adjustment of shoes, etc. If at any time effort is added by the pedal, after the maximum obtained from the servo has been reached, it will be increased in the wheel cylinder hydraulic system from the lower pressure side on the piston area (23).

Releasing the effort applied at the foot pedal results in the primary valve operating piston having a pressure drop below that on the secondary valve operating piston which allows the valve rocker lever (35) to move and close valve (36) and open (34). Thus atmospheric pressure is immediately cut off and equal vacuum results each side of the servo piston (6). The hydraulic servo piston (23) is assisted in its return by spring (21).

SERVO UNIT—To remove

Disconnect vacuum pipe and hydraulic inlet and outlet pipes from servo body. The removal of the three bolts in the side of the body will then release the complete unit from the vehicle. The hydraulic fluid can be drained by holding the unit in a vertical position, with vacuum cylinder uppermost.

Air Cleaner Assembly—To renew element

Remove the cover from the top of the servo unit by moving aside the spring clip and discard the soiled filter beneath.

Alternatively, remove the cover by withdrawing the centre screw and discard the soiled filter beneath but salvage the rubber washer.

Vacuum Cylinder—To dismantle (see Fig. 14)

Hold unit in a vice by means of mounting lugs cast on body.

Remove the seven nuts and screws from vacuum cylinder end and carefully withdraw the end cover (24) from the cylinder.

This operation should be performed *very steadily*, since as soon as the end cover is removed from the cylinder, the vacuum piston assembly (26) will be ejected by the spring (29).

Care must be taken to avoid any damage to the piston rod. Note the nylon washer (27).

The vacuum cylinder may be detached from the hydraulic cylinder body (6) by unscrewing three bolts and removing clamping plate (28).

Use only a dry cloth to clean inside of vacuum cylinder. The use of cleaning fluids at this point may affect the lubricant which is applied on initial assembly.

The vacuum pipe (33) passes through the valve chamber lid and is riveted into position. It can only be detached from it by cutting away the riveting.

The lid, complete with pipe, is removed by removing the two screws.

Hydraulic Output Cylinder—To dismantle (See Fig. 14)

The hydraulic output cylinder occupies the lower bore in the body, and all components in this bore can be withdrawn when the vacuum cylinder and gasket (23) has been removed.

The bush (22) will slide out easily, but before the gland seal (21) can be removed, the spacer (20) must be pushed deeper into the bore, and the outer lip of the gland seal freed from the spacer using a hooked tool.

When the valve spacer (20) has been removed, a circlip (19) will be seen situated a little way down the bore. Depress the piston against its spring (13), using a screwdriver, and remove the circlip with a

pair of circlip pliers. When the circlip has been removed, the distance washer (18) and piston (16) will be forced out of the bore by the spring (13).

Valve Control Gear—To dismantle

Detach vacuum pipe assembly (33) by removing the two round-headed screws and locking washers and prising out of body. Remove plug (17) by tapping flange end of body on a soft surface. Unscrew the two screws retaining the slotted bracket (2) and the "U" shaped spring (3). Depress the primary valve-operating piston (15) approximately $\frac{3}{32}$" (2·4 mm.) and the complete valve linkage may then be withdrawn. The valves may be removed from the rocker lever (4) by extracting the spring clips (1).

Upon removing the valve linkage, the primary valve-operating piston (15) will be driven from the bore by the valve-operating piston spring (14). The spring (14) and Belleville washer (12) can now be removed. To remove the secondary valve-operating piston (11) the flange end of the body should again be tapped upon a soft surface.

SERVO UNIT—To reassemble

Valve Control Gear—To reassemble

(See Fig. 14)

All components which are assembled into the hydraulic bores (i.e. bores that run from the body flange) should be dipped in brake fluid before assembly.

Never allow petrol, paraffin or trichlorethylene to contact hydraulic parts.

Align the holes in the nylon valves (5) with those in the rocker lever (4) and insert the spring clips (1).

Clamp servo body in vice, using the lower mounting lug.

If removed, slide "O" ring over secondary valve-operating piston (11). The ring must seat in groove provided, free from any twisting. Insert the piston into the three diameter control bore in the body.

Locate the Belleville washer in position against shoulder at the end of large bore with convex side towards primary valve-operating piston (15).

If removed, fit taper seal into groove on primary valve-operating piston (15) with the lip facing the chamfered side of the groove. Place valve-operating piston spring (14) over the drilled end of primary valve-operating piston and insert, spring end first, into the control bore. The side hole in the valve-operating piston should be in line with the side hole in the bore.

Insert assembled valve gear into the valve chest in the body so that the ball end of rocking lever (4) engages side hole in the valve-operating piston.

Refit the "U" shaped spring (3) so that the centre of the "U" locates in the recess in the rocker lever.

Refit the slotted retaining plate (2) and secure the spring and plate to the body of the valve chest by the two screws. Check operation of valve gear by depressing primary valve-operating piston by hand and releasing; valves must move freely.

Fix taper seal into groove on plug (17) with lip facing the shorter end of the plug.

Insert plug into remaining portion of control bore (lip side of seal inwards) until about $\frac{1}{16}$" (1·59 mm.) stands proud of the body flange.

1. CLIPS
2. SLOTTED BRACKET
3. "U" SPRING
4. ROCKING LEVER
5. NYLON VALVES
6. HYDRAULIC UNIT BODY
7. SPRING CLIP
8. AIR CLEANER ELEMENT
9. AIR CLEANER COVER
10. ADAPTORS
11. SECONDARY PISTON
12. BELLEVILLE WASHER
13. RETURN SPRING
14. RETURN SPRING
15. PRIMARY PISTON
16. PISTON
17. PLUG
18. DISTANCE WASHER
19. CIRCLIP
20. VALVE SPACER
21. GLAND SEAL
22. STEEL BUSH
23. GASKET
24. END COVER
25. GASKET
26. VACUUM PISTON ASSEMBLY
27. NYLON WASHER
28. CLAMPING PLATE
29. COIL SPRING
30. RUBBER SLEEVE
31. STIFFENER PLATE
32. VACUUM CYLINDER
33. VACUUM PIPE ASSEMBLY

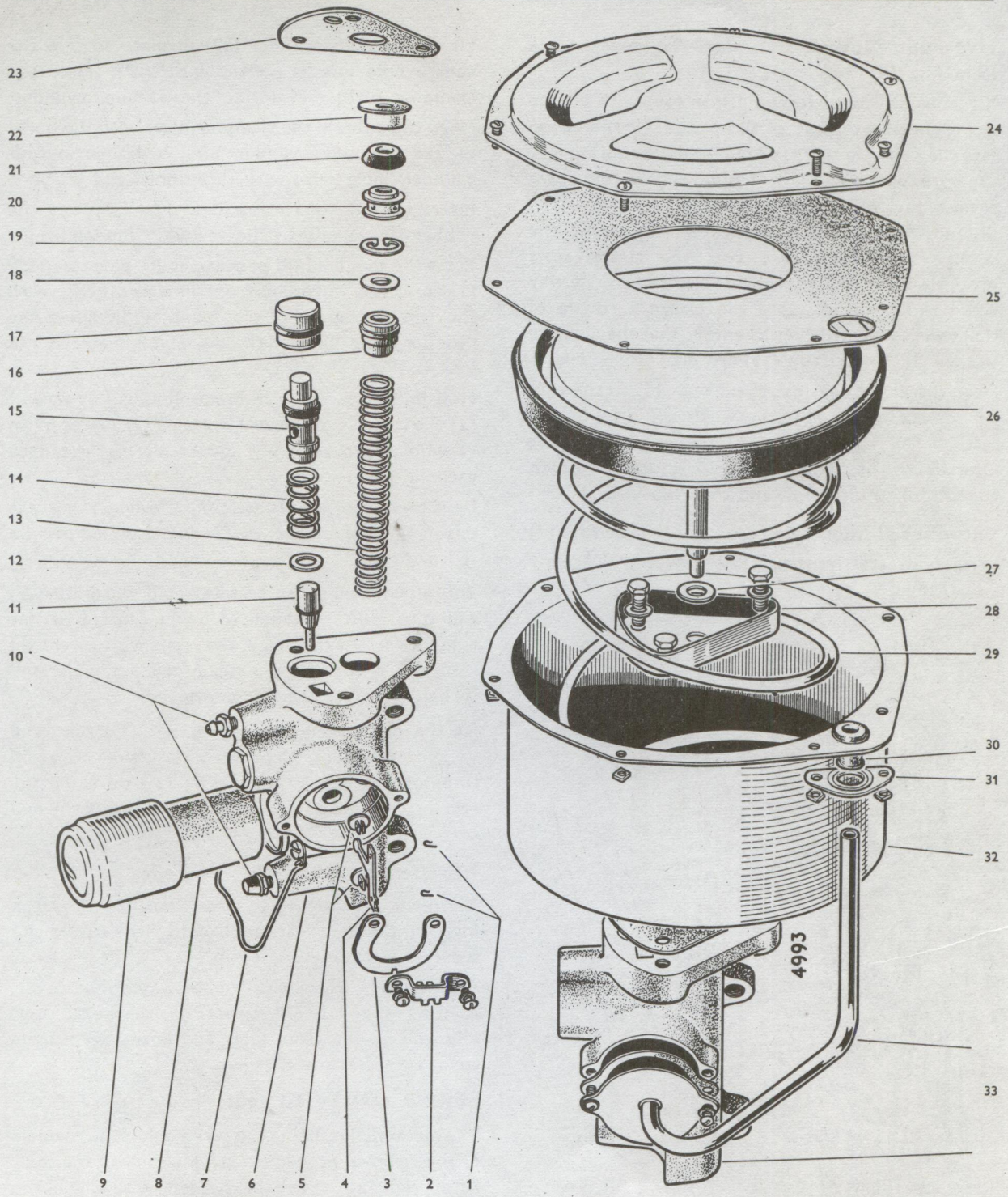

Fig. 14. *Exploded view of servo components*

Hydraulic Output Cylinder—To reassemble (See Fig. 14)

If removed, fit seal to the piston (16) with the lip facing the shorter end of the piston. Fit the piston into the end of spring (13) and insert the spring into the bore, piston end last. Holding the spring down against the resistance of the spring, insert the distance washer (18) and secure it by fitting the circlip (19). Make sure that the circlip seats properly in its groove which is situated a little way down the bore. Actuate the piston a couple of times with a screwdriver to ensure that the distance washer (18) and circlip (19) are properly seated.

Place spacer (16) against gland seal (15) so the thin rim of the spacer lies between the lips of the seal.

Insert both into bore, spacer first, using smooth edged tool to start lips, and then slip in bush.

Vacuum Cylinder—To reassemble (See Fig. 14)

With body still in vice, place gasket (23) against body flange.

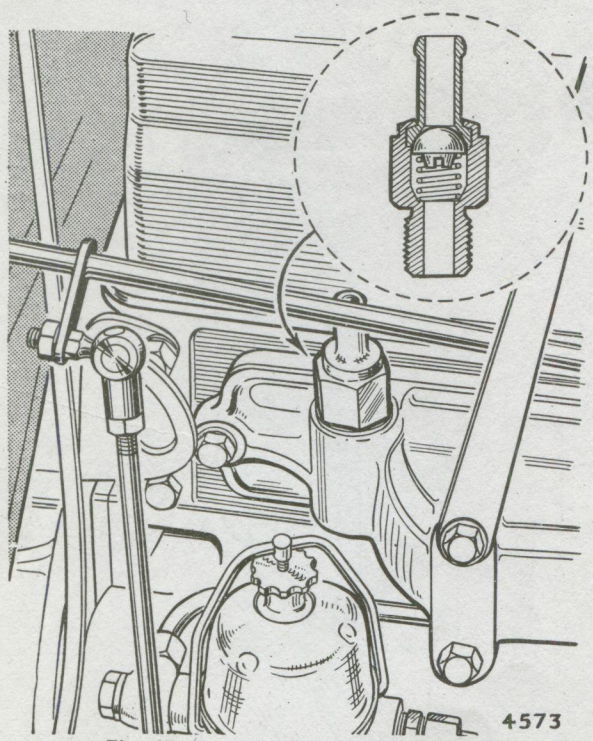

Fig. 15. *Location of one-way valve on manifold*

Fit the vacuum cylinder (32) in place so that the centre hole locates on the bush (22). Place the clamping plate (28) inside the vacuum cylinder. Align the holes in the clamping plate with the bores of the vacuum cylinder and hydraulic output cylinder and secure with three bolts and washers.

Insert the end of the vacuum pipe (33) into the rubber sleeve (30) in the vacuum cylinder flange.

Press the moulded lid of the vacuum pipe assembly (33) into the valve chest on the servo body, with the straight length of pipe running alongside the cylinder (32). Replace the lid-retaining screws and lock washers.

Moisten piston rod with brake fluid and fit washer (27). Place piston return spring (29) in recess in vacuum piston assembly and fit, spring first, into vacuum cylinder.

Do not lubricate the inside of the vacuum cylinder, as this is treated at the works and does not require re-lubrication.

The piston rod must pass through the bush (22) and care must be taken to avoid damage to this component. At this stage, the vacuum piston should return in a positive and steady manner under the spring loading after being depressed.

Fit the end cover (24) and gasket (25) onto the vacuum cylinder. Care must be taken to avoid trapping the sealing ring outside its groove. Fit the seven round-head screws and nuts to retain the end cover.

Air Cleaner Assembly—To refit

Clean the base plate and cover, position the clean filter on the base plate followed by the cover and secure the cover with the clip.

Alternatively, clean the rubber washer and cover, position the rubber washer on the servo unit followed by the clean filter and cover, secure the cover with the centre screw.

SERVO UNIT—To refit

The method of refitting the servo unit is the reversal of the removal procedure given earlier in the text. After refitting it will be necessary to bleed the hydraulic system as described earlier in this section.

BRAKE WARNING SYSTEM

Series IV cars are equipped with a brake warning system which will indicate, by means of a warning lamp in the instrument facia, that the fluid level in the brake master cylinder reservoir has fallen to a pre-determined low level and/or the handbrake is on or not fully released.

A float actuated switch is fitted to the top of the brake master cylinder reservoir and a plunger type switch is fitted in the floor of the car beneath the handbrake lever. The switches are both in circuit with the warning lamp but the system is only operative when the ignition is switched on.

Operation

When the warning lamp glows it indicates that the handbrake is on or is not fully released.

When the warning lamp glows after the handbrake is fully released it indicates that the fluid level in the brake master cylinder reservoir has fallen to a pre-determined low level and now requires attention as described under "Brake Fluid Level".

Should the warning lamp continue to glow when the handbrake is fully released and the fluid level is correct, it indicates that the plunger switch beneath the handbrake lever is faulty, it has become misplaced or the wiring is faulty.

When the warning lamp fails to glow while the ignition and handbrake are on, it indicates a spent bulb, faulty switches or wiring.

Removing and refitting

Fluid reservoir switch

1. Disconnect the battery and the leads from the reservoir cap.
2. Withdraw the switch from the fluid reservoir by removing the cap.
3. Refitting is the reverse of the removal sequence but care must be taken when inserting the body of the switch into the reservoir as sudden immersion of the float may cause the brake fluid to overflow.

Handbrake switch

1. Disconnect the battery.
2. Fully apply the handbrake and unscrew the plunger switch from the floor bracket immediately below the handbrake lever and ease the wire through the tapping of the bracket.
3. Detach the lead from the underside of the switch at the snap connector.
4. Refitting is the reverse of the removal sequence but particular attention must be given to the following points:—
   (i) That the lead of the plunger switch is fed through the tapping in the floor bracket first and then fitted to the switch.
   (ii) That the plunger of the switch is positioned directly under the handbrake lever and this can be attained by slackening off the front handbrake securing bolt, moving the floor bracket and then retightening the bolt.

MASTER CYLINDER AND FLUID RESERVOIR

Series IV Cars: The master cylinder and integral fluid reservoir of previous cars has been superseded by a master cylinder with a separate fluid reservoir. The reservoir is mounted on the rear engine bulkhead and connected to the master cylinder by a short length of pipe.

Fitted to the top of the fluid reservoir is the float type switch included in the "BRAKE WARNING SYSTEM".

The topping-up sequence remains unchanged.

To remove and refit

Master cylinder

1. Detach the pipe from the bottom of the fluid reservoir and master cylinder by releasing the union nut and trapping the escaping fluid in a suitable receptacle.
2. The master cylinder is now removed as described under "MASTER CYLINDER—To remove".
3. Refitting is the reverse of the removal sequence, see under "MASTER CYLINDER—To refit".

Fluid reservoir

1. Disconnect the battery and the two leads to the fluid warning switch mounted on top of the fluid reservoir.
2. Detach the pipe from the base of the fluid reservoir by releasing the union nut and trapping the escaping fluid in a suitable container.
3. Remove the fluid reservoir from the rear engine bulkhead by withdrawing two bolts and washers.
4. Refitting is the reverse of the removal sequence but on completion the brakes must be bled of air.

TYRES AND WHEELS

(Pages 1—4)

CONTENTS

MAINTENANCE	Page
—Repositioning tyres	2
—inflation pressures	2
—tyre damage	2
—oil and grease	2
—irregular tread wear	2
CAUSES AND RECTIFICATION OF UNEVEN TYRE WEAR	2
TYRE AND WHEEL BALANCE	4

MAINTENANCE

Repositioning Tyres

It is recommended that tyres complete with wheels are interchanged every 3,000 miles (4,800 km.). Fig. 1 illustrates three different methods.

Diagonal interchanging between left-hand front and right-hand rear and between right-hand front and left-hand rear provides the most satisfactory first change because it reverses the directions of rotation. Subsequent interchanging of front and rear tyres should be as indicated by their appearance with the object of keeping the wear on all the treads even and uniform.

Inflation Pressures

Tyres should be examined at least once a week for loss of pressure. Pressures should be checked when the tyres are cold, such as after standing overnight, and not when they have attained normal running temperatures.

Do not over-inflate, and do not reduce pressures which have increased owing to increased temperature. The correct inflation pressures are given in the General Data Section.

Tyre Damage

Tyres should be examined at regular intervals for small objects embedded in the treads, such as flints and nails, also for cuts and penetrations, and for damage due to impacts with kerbs, etc.

Minor injuries confined to tread rubber, such as from small pieces of glass or road dressing material, require no attention other than the removal of the objects. More severe tread cuts and wall rubber damage, particularly if they penetrate to the outer layer of the fabric, require vulcanised repairs.

Injuries which extend into or through the fabric, except clean nail holes, seriously weaken the tyre. Satisfactory repair necessitates new fabric being built in and vulcanised. This requires expensive plant equipment and should be undertaken by a tyre repair specialist or by the tyre maker.

If a gaiter is to be fitted to an injured tubeless tyre as a temporary measure, the tyre will not hold air unless an inner tube is also fitted, after first having removed the special tubeless valve from the rim. Small holes in the tread, such as nail holes, in tubeless tyres can be repaired efficiently by means of rubber plugs which are contained in the Dunlop "Reddiplug" Repair Kit. Full instructions for their use are included with the kit.

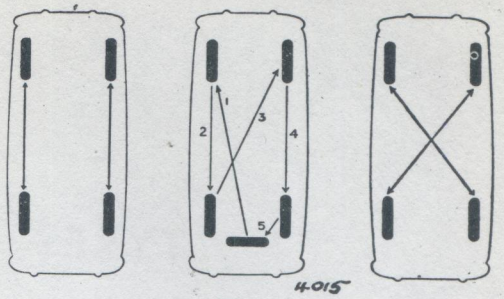

Fig. 1

Oil and Grease

Oil and grease should be removed by using petrol sparingly. If oil or grease on the tyres results from over-lubrication or defective oil sealing, suitable corrective action should be taken.

Irregular Tread Wear

All tyres, especially those fitted to the front wheels, should be examined at regular intervals for uneven wear (see below).

CAUSES AND RECTIFICATION OF UNEVEN TYRE WEAR

The causes of uneven tyre wear are often difficult to diagnose individually; it is advisable, in such cases, to check all the following points:—

(*a*) Tyre Pressures (see General Data).

(*b*) Brake freedom and balance, shoe settings, drum condition and trueness.

(*c*) Front wheel track and ackerman (see under Section "F").

(*d*) Camber on both front wheels (see under Section "F").

(*e*) Play in hub bearings (see Section "F" under the heading "To dismantle and re-assemble the front hubs").

(*f*) Play in king pin bushes, suspension bearings and steering joints.

(*g*) Wheel lift and wobble. On a truly mounted and revolving wheel the difference between the high and low points measured at any location on either tyre seat should not exceed $\frac{3}{32}$" (2·4 mm.). The lateral variation measured on the vertical inside face of a flange should also not exceed $\frac{3}{32}$" (2·4 mm.).

(*h*) Balance of the wheel and tyre assemblies. This check may only be carried out satisfactorily by using a Tyre Balancing Machine. The tyres should be checked for both static and dynamic balance. (See under "Tyre and Wheel Balance").

(*i*) Condition of road springs and shock absorbers.

Irregular wear may also be caused by the local road conditions, such as from a combination of steep camber, abrasive surfaces and frequent hills and bends. Driving methods may also be involved. Thus, with all the above points properly checked, uneven wear may still be experienced. The only solution in cases such as this is to regularly reposition the wheels and tyres as previously described.

Sometimes the individual symptoms are more obvious, which considerably simplifies the rectification procedure:—

Persistent Under-Inflation (See Fig. 2)
Excessive tyre distortion from persistent under-inflation causes rapid wear on the shoulders and leaves the centre standing proud.

Fig. 2

Brake Drum Eccentricity (See Fig. 3)
Brake drums being scored or out of true can cause local "pulling up" with resultant flats on the tread pattern.

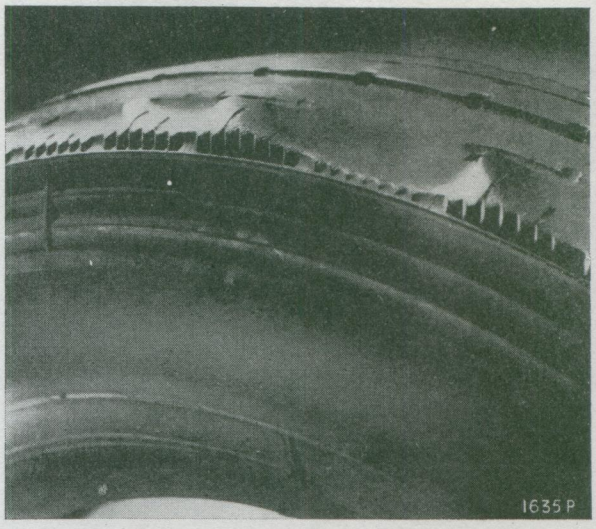

Fig. 3

Misalignment of Front Wheels (See Fig. 4)
The tyre tread having been scrubbed off laterally is caused by wheel misalignment. An upstanding sharp fin on the edge of each pattern rib is a sure sign of misalignment. With minor misalignment, probably aggravated by road camber, the ribs may have sharp edges instead of upstanding fins. These conditions will usually be accompanied by heel and toe wear across the tread due to its being distorted and worn away laterally instead of in a true rolling direction.

It is possible to determine from the fins whether the wheels are excessively toed in or toed out. "Fins" on the inside edges of the pattern ribs—nearest to the car—and particularly on the left-hand side tyre, indicate toe-in. "Fins" on the outside edges, particularly on the right-hand side tyre, indicate toe-out. On left-hand drive cars this condition is reversed, "fins" on the inside edges of the right-hand tyre indicating toe-in, and "fins" on the outside edges of the inside tyre indicating toe-out.

Fig. 4

Excessive Wheel Camber (See Fig. 5)
Excessive wheel camber causes rapid and one-sided wear. Road camber will have the same effect. If a check of the mechanical factors reveals nothing abnormal, interchange diagonally with the rear wheels as described under "Maintenance".

TYRE AND WHEEL BALANCE

In the interests of smooth riding, precise steering and high stability, all tyres are balance checked to predetermined limits. Coloured spots may be found on one bead indicating the lightest part of the tyre, and should be fitted near the valve or, where inner tubes are fitted, in line with the coloured spots on the tube.

Where balance weights have been fitted to the wheel rims, it is advisable to detach them before tyre removal to avoid the possibility of their inadvertently falling inside the tyre. If the same tyre is to be refitted, the positions and amounts of these balance weights as well as the position of the tyre on the wheel should be marked with chalk on the rim, so that subsequent replacement may restore the original balance as far as possible.

The original degree of balance is not necessarily maintained in service, as it may be affected by uneven tread wear, by cover or tube repairs, or by tyre removal and replacement. Normal wear of moving parts may even render the car more sensitive to unbalance.

Rebalancing of tyre and wheel assemblies should be carried out with the aid of approved equipment capable of measuring both static and dynamic balance. It is important to note that this does not constitute a remedy for wheel distortion.

Fig. 5

ELECTRICAL EQUIPMENT

CONTENTS

	Page
ALTERNATORS 10AC and 11AC	45
—Description	45
—Maintenance	46
—Servicing requirements	46a
—Fitting precautions	46a
—Servicing precautions	46b
—Testing	47
—Servicing	48
—Circuit diagrams	58b
ALTERNATOR CONTROL 4TR	52a
—Checking and adjusting	52a
ADDITIONAL INFORMATION	56a
BATTERY	2b
—Maintenance	3
—Charging	4
—Preparing new battery	5
CONTROL BOXES (D.C. Generator)	
—RB.310 Testing and adjusting	14
—RB.340 Testing and adjusting	53
DISTRIBUTOR	23
—Maintenance	24
—Servicing	25
DIAGNOSIS CHARTS	57
ELECTRIC WINDSCREEN WASHERS	
—Lucas 2SJ	42
—Lucas 5SJ	56b
FLASHING DIRECTION SIGNALS	35
FUSES	17

CONTENTS—continued

	Page
GENERATOR (Dynamo)	7
—Maintenance	7
—Servicing	8
—Repolarizing	56a
HORNS	36
HORN RING AND DIRECTION INDICATOR SWITCH	41
LAMPS	28
SPARKING PLUGS	See Section B
STARTER DRIVE	21
STARTER MOTOR	17
—Maintenance	17
—Servicing	18
WINDSCREEN WIPER	37
WIRING DIAGRAMS	60

ELECTRICAL EQUIPMENT

ELECTRICAL SYSTEM

The electrical system is a 12 volt earth return type employing positive earth polarity on earlier models and negative earth polarity on later models. The change to negative earth became effective from the following chassis numbers:—

Super Snipe V	B.084600001
Imperial	B.884400001

The system incorporates the lighting, charging, starter, ignition and auxiliary circuits, with progressive changes in these circuits with the introduction of new equipment, so that the single headlamps fitted earlier are replaced by dual headlamps, and the dynamo system of charging is replaced by alternator equipment.

Dismantling of the system must not be attempted unless the proper tools are available. For testing purposes, we recommend the Avo Model 12 (obtainable from Avo Ltd., 92-96 Vauxhall Bridge Road, London S.W.1) which has been specially designed for automotive use and enables a wide range of checking operations to be carried out with a single instrument.

ALTERNATOR SYSTEM

The alternator system of charging is fitted to Imperial from first production and to Super Snipe from chassis number B.084600001 onwards. The alternator is designed particularly to cater for the increased electrical loading imposed by the wider range of equipment used in the electrical system. It also provides a useful output at low engine speeds which makes it ideally suitable for "in-town" driving conditions.

Because of the highly sensitive nature of the electronics in the system, certain basic requirements must be fulfilled before any attempt is made to service the equipment. Details of these requirements are contained in subsequent paragraphs for the alternator together with a list of servicing precautions which must be strictly observed.

An alternator diagnosis chart is included near the end of this Section; this is accompanied by a positive earth wiring diagram and a negative earth wiring diagram. These diagrams show the associated circuit connections and units employed in the system. The appropriate diagram should be used in conjunction with the diagnosis chart.

POLARITY

PRECAUTIONS

In consequence of the introduction of negative earth polarity, vehicles in service will have either a positive or a negative earthed electrical system. It follows, therefore, that persons servicing the units in the system will need to take care to differentiate between the two polarities.

Certain units are interchangeable or adaptable for use with either earth polarity, but others fitted with electronic devices would become irreparably damaged if connected to an opposite polarity. The effects of polarity on the units are summarised as follows:—

Batteries, Ignition Coils, Ammeters

These are suitable for both positive and negative earth systems provided they are connected to suit the vehicle's earth polarity.

Control Boxes (for D.C. Generator)

These are suitable for both positive and negative earth systems, and if connected into a system with an opposite polarity, will automatically repolarize themselves.

D.C. Generators (Dynamos)

These are suitable for both positive and negative earth systems, provided they are repolarized after fitting.

Radios

These are designed for one or other polarity and reversed connections will destroy the transistors. It is possible to alter the internal connections to suit an opposite polarity, but this must be entrusted to an appointed radio dealer.

Electric Clocks and Tachometers

These are designed for one or other polarity and cannot be adapted to suit an opposite polarity. Incorrect connections will render the instrument useless.

Alternators

These are not interchangeable. They are polarity conscious to suit one system only, and on no account must any attempt be made to repolarize—irreparable damage would result.

Important precautions for the use of battery chargers and arc welding equipment are given in later paragraphs for the alternator.

BATTERY

DESCRIPTION

Early batteries are of the semi-linkless type, the short intercell connectors being partially exposed to assist testing of the individual cells. Later batteries are of the Lucas "B.T." series having a "clean-top" with concealed intercell connectors to minimise the risk of corrosion. Diecast cable connectors are fitted and retained with screws.

The battery is mounted on a cradle in the engine compartment.

Batteries are supplied either filled and charged, unfilled and uncharged, or "dry-charged", that is with the cells in the charged condition but sealed and without electrolyte. Details of preparing unfilled, uncharged and "dry-charged" batteries for service are given in later paragraphs.

TO REMOVE AND REFIT

Disconnect the two terminal cables, remove the two strap securing bolts and lift the battery from the car.

When refitting, ensure that the strap is quite

securely fastened to avoid any possibility of spilling through excessive agitation of the electrolyte.

MAINTENANCE

Battery maintenance consists mainly of regular inspection and servicing.

1. Keep the battery and its surroundings clean and dry. Give particular attention to the top of the battery to prevent electrical leakage between the cell terminals.

2. Remove the vent plugs. Inspect the rubber anti-leak washers (if applicable) and see that the vent holes are clear.

3. Examine the electrolyte level and top up, when necessary. The correct level is just to the top surface of the separator guard. Do not over-fill or acid will escape through the vent holes with detrimental effect to the connections and adjacent parts of the car.

The use of the Lucas Battery Filler will be found helpful in this topping-up process, as it ensures that the correct electrolyte level is automatically obtained and also prevents distilled water from being spilled over the top of the battery.

Distilled water should always be used for topping-up. In an emergency, however, drinking water, clean rainwater or melted snow may be used. The following waters must not be used : salt water, chlorinated water, chemically softened water or stagnant water.

CAUTION.—Never use a naked light when examining a battery, as the mixture of oxygen and hydrogen given off by the battery when on charge, and to a lesser extent when standing idle, can be dangerously explosive.

If a battery is found to need an excessive amount of topping-up, the cause should be sought. If an excessive charge is suspected, check the regulator setting. If one cell in particular is at fault, examine the container for cracks.

Note:—Never transfer electrolyte from one cell to another.

4. With the diecast type of connector no corrosion difficulties arise. When fitting the connectors to the battery, first smear the inside of the tapered hole of the connector with petroleum jelly and push on the connector by hand.

Insert the self-tapping screw and tighten with medium pressure only ; fill in the recess around the screw head with more petroleum jelly. If the connectors are fitted dry, and driven home with too much force, they may be difficult to remove at a later date.

5. Examine the earth connection to ensure that it is clean and free from rust or corrosion.

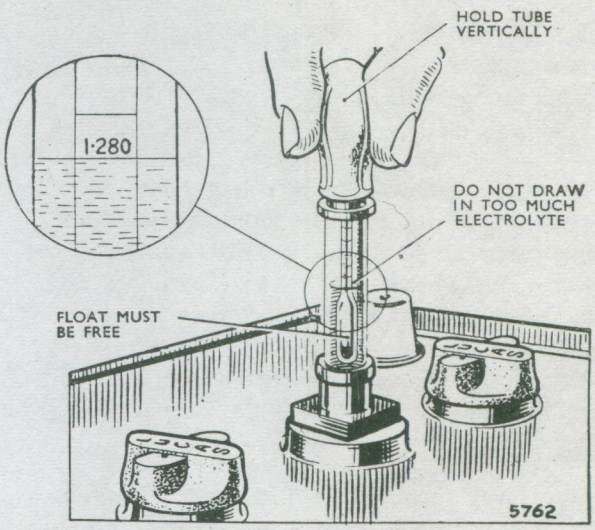

Fig. 1. *Taking hydrometer readings—take readings at eye level*

6. Measure the specific gravity of the electrolyte, in each cell in turn, with a hydrometer (Refer Fig. 1). The reading given by each cell should be approximately the same; if one cell differs appreciably from the others, an internal fault in the cell is indicated.

This will probably be confirmed by the heavy discharge test described later.

The appearance of the electrolyte drawn into the hydrometer when taking a reading gives a useful indication of the state of the plates ; if it is very dirty, or contains small particles in suspension, it is possible that the plates are in a bad condition.

Check the specific gravity of the electrolyte as an indication of the state of charge of the battery using a hydrometer.

The specific gravities and their indications are as follows:—

Climate ordinarily below 80°F. (26·7°C.)

Cell fully charged	1·270—1·290
Cell half charged	1·190—1·210
Cell fully discharged	1·110—1·130

Climate ordinarily above 80°F. (26·7°C.)

Cell fully charged	1·210—1·230
Cell half charged	1·130—1·150
Cell fully discharged	1·050—1·070

The specific gravity of electrolyte varies with its temperature. The figures quoted above are for an electrolyte temperature of 60°F. (15·6°C.). If the electrolyte temperature is above 60°F. (15·6°C.), add 0·002 to the hydrometer reading for each 5°F. (—15·0°C.) rise to obtain true specific gravity. Similarly, 0·002 must be deducted from the hydrometer reading for each 5°F. (—15·0°C.) below 60°F. (15·6°C.).

If the level of the electrolyte is so low that a hydrometer reading cannot be taken, no attempt should be made to take a reading after adding distilled water until the battery has been on charge for at least thirty minutes.

Note:—
If the car is out of use for any length of time the battery should not be allowed to run down or to remain in a discharged condition. It should be recharged about every fortnight from an independent electricity supply.

7. Heavy Discharge Test

A heavy discharge tester consists of a centre-zero voltmeter 2 or 3 volts full scale, across which is connected a shunt resistance capable of carrying the current involved. The current shunt resistance or loading element for testing car type batteries is one that will limit the current yielded by a good cell to 150—160 amperes. Before testing, each cell must be at least 70% charged, having a minimum electrolyte density of 1·250 s.g. in shade temperatures normally below 80°F. (26·7°C.) or 1·180 s.g. in hotter climates. Pointed prongs are provided for making contact with the intercell connectors. Press the contact prongs against the exposed terminals of each cell. (On B.T. type batteries, pierce the five small indentations on the lid with a heated pointed tool to expose the terminals).

Remember that if the battery is subjected to long periods of discharge (e.g., long period of night parking with lights on) without suitable opportunities for recharging, a low state of charge is only to be expected. A fault in the dynamo or regulator, or neglect during a period out of commission, may also be responsible for any trouble.

RECHARGING FROM AN EXTERNAL SUPPLY

If tests indicate that the battery is discharged, but is otherwise in good condition, it should be recharged, either on the vehicle by a period of daytime running or on the bench from an external supply.

If the latter, the battery should be charged at 5 amperes until the specific gravity and voltage show no increase over three successive hourly readings.

During the charge the electrolyte must be kept level with the tops of the separators or splash guard by the addition of distilled water.

A battery in which all cells show a general falling off in efficiency will often respond to the process known as "cycling". This process consists of fully charging the battery as described above, and then discharging it by connecting to a lamp board, or

other load, taking about 5 amperes. The battery should be capable of providing this current for at least 7 hours before it is fully discharged, as indicated by the voltage of each cell falling to 1·8.

If the battery discharges in a shorter time, repeat the "cycle" of charge and discharge.

PREPARING NEW BATTERIES FOR SERVICE

Batteries for the home market are normally supplied filled and charged, and may be put into service on the vehicle without further attention.

On occasions, however, it may be necessary to prepare a battery supplied dry and uncharged, in this event the instructions in para. (*a*); "Initial Filling and Charging", should be followed.
Batteries for export markets are supplied "dry-charged". Before fitting to the vehicle the battery must be filled with acid as described in para. (*b*); no initial charging is necessary.

(*a*) INITIAL FILLING AND CHARGING OF NEW BATTERIES

Preparation of Electrolyte

Electrolyte of the specific gravity given above is prepared by mixing distilled water and concentrated sulphuric acid, usually of 1·835 S.G. The mixing must be carried out either in a lead-lined tank or in suitable glass or earthenware vessels. Slowly add the acid to the water, stirring with a glass rod.

Never add the water to the acid as the resulting chemical reaction causes violent and dangerous spurting of the concentrated acid. The approximate proportions of acid and water are indicated in the following table :

To obtain Specific Gravity (corrected to 60°F. (15·6°C.))	*Add 1 vol. of acid of 1·835 S.G. (corrected to 60°F. (15·6°C.))*
1·340	2·0 volumes of water.
1·290	2·7 ,, ,, ,,
1·270	2·8 Volumes of water
1·210	4·0 ,, ,, ,,

Heat is produced by the mixture of acid and water, and the electrolyte should be allowed to cool before taking hydrometer readings—unless a thermometer is used to measure the actual temperature, and a correction applied to the reading as described above—and before pouring the electrolyte into the battery. The total volume of electrolyte required is 6 pints (3·41 litres) for 51 amp./hour batteries.

Filling the Cells

The temperature of the acid, battery and filling-in room must not be below 32°F. (0°C.). Carefully break the seals in the filling holes and half fill each cell with electrolyte of the appropriate specific gravity.

Allow the battery to stand for at least six hours, in order to dissipate the heat generated by the chemical action of the acid on the plates and separators, and then add sufficient electrolyte to fill each cell to the top of the separators. Allow to stand for a further two hours and then proceed with the initial charge.

Initial Charge

The initial charging rate is 3·5 amperes. Charge at this rate until the voltage and specific gravity readings show no increase over five successive hourly readings. This will take from 40 to 80 hours, depending on the length of time the battery has been stored before charging.

Keep the current constant by varying the series resistance of the circuit, or the generator output.

This charge should not be broken by long rest periods. If, however, the temperature of any cell rises above maximum quoted, the charge must be interrupted until the temperature has fallen at least 10°F. below that figure. Throughout the charge the electrolyte must be kept level with the

top of the separators by the addition of more acid, as required.

At the end of the charge carefully check the specific gravity in each cell to ensure that, when corrected to 60°F. (15·6°C.) it lies within the specific limits. If any cell requires adjustment, some of the electrolyte must be syphoned off and replaced either by distilled water or by acid of the strength originally used for filling-in, depending on whether the specific gravity is too high or too low. Continue the charge for an hour or so to ensure adequate mixing of the electrolyte and again check the specific gravity readings. If necessary, repeat the adjustment process until the desired reading is obtained in each cell. Finally, allow the battery to cool and syphon off any electrolyte above the tops of the separators.

(*b*) PREPARING "DRY-CHARGED" (Model G.T.Z. 9A) BATTERIES FOR SERVICE

Batteries for export markets are supplied "dry-charged", no initial charging is necessary.

Electrolyte of the appropriate specific gravity, either 1·270 or 1·210, is prepared as described in paragraph (*a*) prior; for electrolyte of 1·270 S.G. add 1 volume of 1·835 S.G. sulphuric acid to 2·8 volumes of distilled water, and for electrolyte of 1·210 S.G., 1 volume of acid to 4 volumes of distilled water. The total quantity of electrolyte required is 6 pints (3·41 litres) for 51 amp./hour batteries.

Filling the Cells

Carefully break the seals in the cell-filling holes and fill each cell with electrolyte to the top of the separators, **in one operation.** The temperature of the filling room, battery and electrolyte should be maintained between 60°F. (15·6°C.) and 100°F. (37·8°C.). If the battery has been stored in a cool place it should be allowed to warm up to room temperature before filling.

Batteries filled in this way are 90 per cent. charged and may be used after a standing period of one hour. When time permits, however, a short freshening charge, at the normal recharge rate of the battery, 5 amperes, will ensure that the battery is fully charged.

During the charge the electrolyte must be kept level with the top edge of the separators by the addition of distilled water. Check the specific gravity of the acid at the end of the charge; if 1·270 acid was used to fill the battery, the specific gravity should now be between 1·270 and 1·290; if 1·210, between 1·210 and 1·230.

SPECIFIC GRAVITIES AND CHARGING RATES

Battery	*Ampere-hour capacity*		*Specific gravity of acid*		*Initial charge current*	*Recharge current*
	(10-hr. rate)	*(20-hr. rate)*	*(a)*	*(b)*		
GTW 9A	51	58	1·340	1·290	3·5	5
BT 9A and GT 9A (Service replacement for GTW 9A in home market)	51	58	1·270	1·210	3·5	5

Column (*a*) is for Home and Climates ordinarily below 80°F. (26·7°C.).
Column (*b*) is for Climates frequently above 80°F. (26·7°C.).
If the suffix letter "Z" follows the basic type letters (e.g. G.T.Z.) the battery is "dry-charged".

N.B.—The specific gravity of the electrolyte varies with the temperature. For convenience in comparing specific gravities, they are always corrected to 60°F. (15·6°C.), which is adopted as a reference temperature.

The method of correction is as follows:—

For every 5°F. (—15·0°C.) **below** 60°F. (15·6°C.), **deduct** ·002 from the observed reading to obtain the true specific gravity at 60°F. (15·6°C.). For every 5°F. (—15·0°C.) **above** 60°F. (15·6°C.), **add** ·002 to the observed reading to obtain the true specific gravity at 60°F. (15·6°C.).

The temperature must be that actually indicated by a thermometer immersed in the electrolyte, and not the surrounding atmospheric temperature.

GENERATOR

GENERAL

The generator is a shunt wound two-pole two-brush machine, arranged to work in conjunction with a current-voltage control regulator unit.

A fan, integral with the driving pulley, draws cooling air through the generator, inlet and outlet holes being provided in the end brackets of the unit.

The output of the generator is controlled by the regulator and is dependent on the state of charge of the battery and the loading of the electrical equipment in use. When the battery is in a low state of charge, the generator gives a high output, whereas if the battery is fully charged, the generator gives only sufficient output to keep the battery in good condition without any possibility of over-charging. An increase in output is given to balance the current taken by lamps and other accessories when in use.

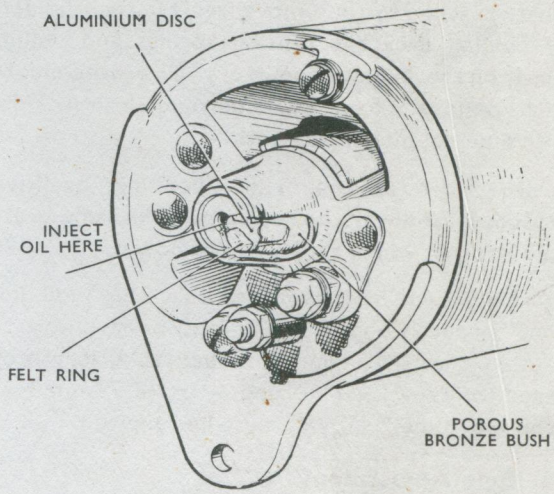

Fig. 2. *Commutator-end bearing lubricator*

ROUTINE MAINTENANCE

(*a*) Lubrication

Inject a few drops of engine oil into the hole marked "OIL" in the end of the C.E. bearing housing (Refer Fig. 2). The felt ring acts as a reservoir.

(*b*) Inspection of Brush-gear and Commutator

Remove the generator from the engine.

Inspect the commutator through the ventilator apertures in the commutator-end bracket.

The commutator should be clean, free from oil and dirt and have a polished appearance. If it is dirty it must be cleaned, through the two apertures in the commutator-end bracket, using a soft cloth. This operation will be greatly facilitated if the cloth is wrapped round a piece of hardwood and pressed against the commutator whilst revolving the armature by hand. Should the commutator appear to be very dirty, the cloth should be moistened with petrol.

Examination of the brush-gear is carried out by removing the two through bolts, commutator-end bracket and the yoke.

Partly lift the brushes and trap them in this now raised position with their tension springs.

Loosely assemble the commutator-end bracket to the armature and release the brushes so that they resume their correct position on the commutator.

Check that the brushes move freely in their holders by holding back the tension springs and pulling gently on the flexible connectors. If a brush tends to stick, remove it from its holder and clean its sides with a petrol-moistened cloth.

In order to retain their same "bedding" qualities, brushes must always be replaced in the same brush holders from which they were removed.

Brushes which have worn so that they will not "bed" properly on the commutator or have worn to within $\frac{7}{16}$ in. (11·11 mm.) of their total length on generator type C45PV-5 and $\frac{11}{32}$ in. (8·73 mm.) on generator type C45PV-6, must be renewed.

(c) Belt Adjustment

See Section "B" of this Manual.

PERFORMANCE DATA

(See General Data)

SERVICING

(a) Testing in position to locate fault in charging circuit

In the event of a fault in the charging circuit, adopt the following procedure to locate the cause of trouble.

(i) Inspect the driving belt and adjust if necessary (see Para. c).

(ii) Check that the generator and control box are connected correctly. The larger generator terminal must be connected to control box terminal "D" and the smaller generator terminal to control box terminal "F". Check that the control box is correctly earthed through its mounting studs.

(iii) Disconnect the cables from terminals of generator and connect the two terminals with a short length of wire.

(iv) Start the engine and set to run at normal idling speed.

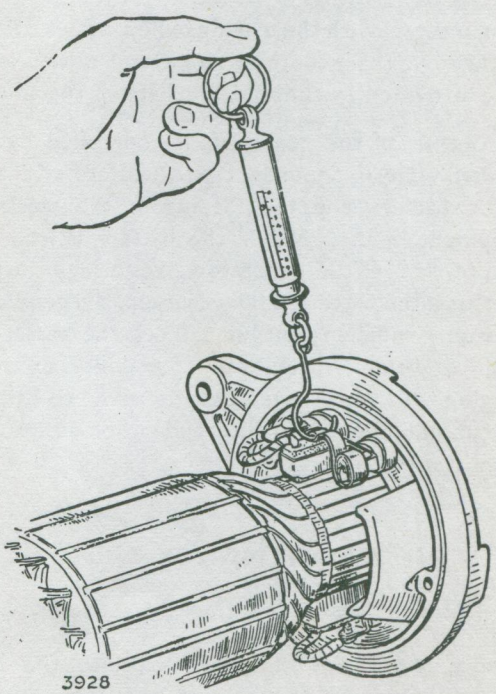

Fig. 3. *Testing brush spring tension*

(v) Clip the negative lead of a moving coil type voltmeter, calibrated 0–20 volts, to one generator terminal and the other lead to a good earthing point on the yoke.

(vi) Gradually increase the engine speed, when the voltmeter reading should rise rapidly and without fluctuation. Do not allow the voltmeter reading to reach 20 volts and do not race the engine in an attempt to increase the voltage. It is sufficient to run the generator up to a speed of 1,500 r.p.m.

If there is no reading, check the brushgear as described in (vii) below. If there is a low reading of approximately ½–1 volt, the field winding may be at fault (see Para. e). If there is a reading of 6 volts the armature winding may be at fault (see Para. *d*).

(vii) Dismantle the generator and check the brushgear and commutator as described in Para. *b*.

Test the brush spring tension with a spring scale as shown in Fig. 3. The tension of the springs should be 24—26 ozs. for the type C45PV-5 and 20—28 ozs. for the type C45PV-6.

if there is still no reading on the voltmeter, there is an internal fault and the complete unit, if a spare is available, should be replaced, otherwise the unit must be dismantled (see Para. b) for internal examination.

(viii) If the generator is in good order, remove the link from between the terminals and restore the original connections, taking care to connect the larger generator terminal to control box terminal "D" and the smaller generator terminal to control box terminal "F"

(*b*) To Dismantle (Refer Fig. 5)

(i) Take off the driving pulley.

(ii) Unscrew and withdraw the two through bolts.

(iii) The commutator end bracket can now be withdrawn from the generator yoke.

(iv) The driving end bracket together with the armature can now be lifted out of the yoke.

(v) The driving end bracket, which on removal from the yoke has withdrawn with it the arm-

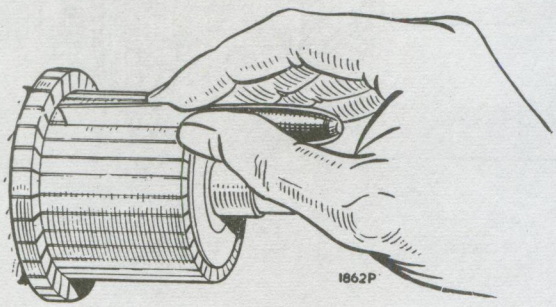

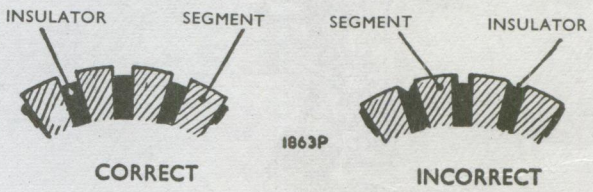

Fig. 4. *Method of undercutting commutator insulation*

If the commutator is blackened or dirty, clean it by holding a petrol-moistened cloth against it while the engine is turned slowly by hand cranking. Re-test the generator as in (vi);

ature and armature shaft ball-bearing, need not be separated from the shaft unless the bearing is suspected and requires examination, or the armature is to be renewed; in this

event the armature should be removed from the end-bracket by means of a hand press,

(c) Commutator

A commutator in good condition will be smooth and free from pits or burned spots. Clean the commutator with a petrol-moistened cloth. If this is ineffective, carefully polish with a strip of fine glass paper while rotating the armature. To remedy a badly worn commutator, mount the armature, with or without the drive-end bracket in a lathe. rotate at high speed and take a light cut with a very sharp tool. Do not remove more metal than is necessary. Polish the commutator with very fine glass paper. Undercut the insulators between the segments (Refer Fig. 4) to a depth of $\frac{1}{32}$ in. (0·79 mm.) with a hacksaw blade ground down to the thickness of the insulator.

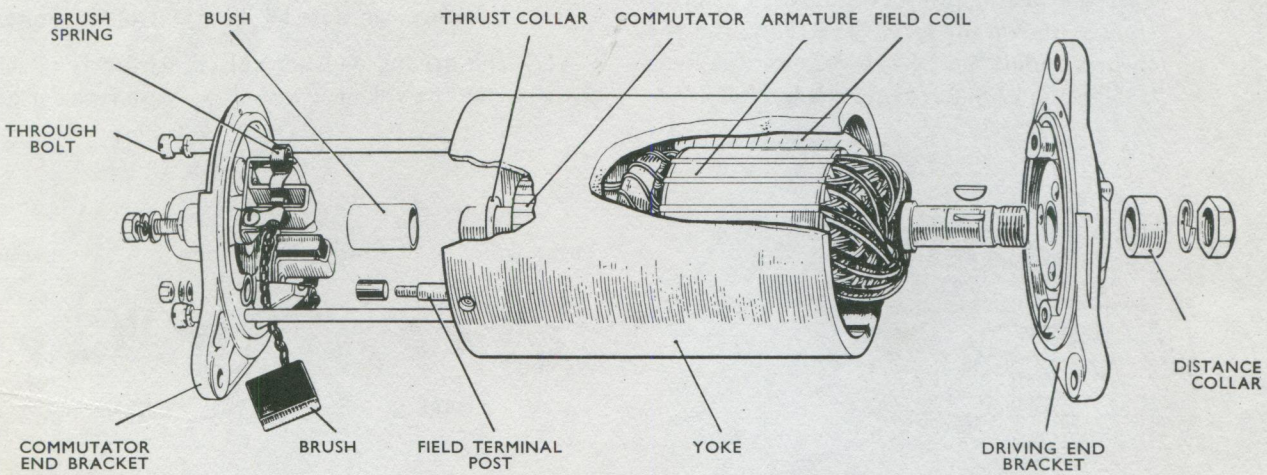

Fig. 5. *Generator, dismantled view*
(later generators are fitted with Lucas connectors)

(d) Armature

The testing of the armature winding requires the use of a volt-drop test and growler. If these are not available the armature should be checked by substitution. No attempt should be made to machine the armature core or to true a distorted armature shaft.

To remove the armature shaft from the drive-end bracket and bearing, support the bearing retaining plate firmly and press the shaft out of the drive-end bracket. When fitting the new armature, support the inner journal of the ball-bearing whilst pressing the armature shaft firmly home.

(e) Field Coils

Measure the resistance of the field coils, without removing them from the generator yoke, by means of an ohm meter connected between the field terminal and yoke. The ohm meter should read 6·0 ohms approximately. If an ohm meter is not available, connect a 12 volt d.c., supply with an ammeter in series between the field terminal and generator yoke. The ammeter reading should be approximately 2 amperes.

Zero reading on the ammeter, or an "infinity" ohm meter reading, indicates an open circuit in the field winding. If the current reading is much more than 2 amperes, or the ohm reading much below 6 ohms, it is an indication that the insulation of one of the field coils has broken down.

In either case, unless a substitute generator is available the field coils must be renewed. To do this, carry out the procedure outlined below, using a wheel-operated screwdriver. (Refer to Figs. 6 and 7).

(i) Drill out the rivet securing the field coil terminal block to the yoke, and remove the field coil connections.

(ii) Remove the insulation piece which is provided to prevent the junction of the field coils from contacting with the yoke.

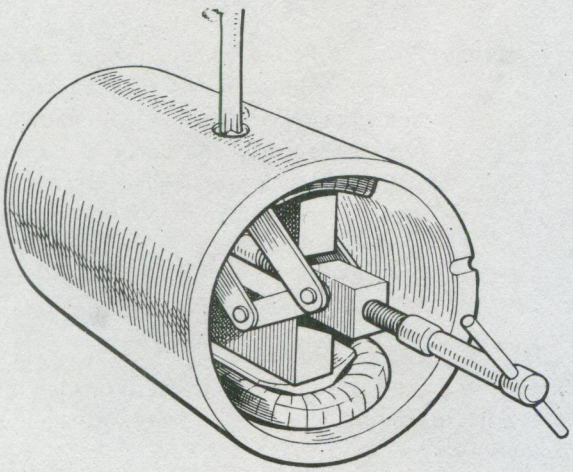

Fig. 6. *Using the pole shoe expander*

(iii) Mark the yoke and pole shoes so that the latter can be refitted in their original positions.

(iv) Unscrew the two pole shoe retaining screws by means of the wheel operated screwdriver.

(v) Draw the pole shoes and coils out of the yoke and lift off the coils.

(vi) Fit the new field coils over the pole shoes and place them in position inside the yoke. Take care to ensure that the taping of the field coils is not trapped between the pole shoes and the yoke.

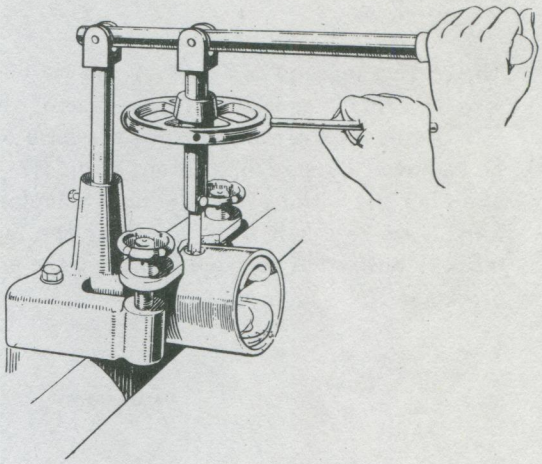

Fig. 7. *Tightening the pole shoe retaining screws*

(vii) Locate the pole shoes and field coils by lightly tightening the fixing screws.

(viii) Insert the pole shoe expander, open it to the fullest extent and tighten the screws (Refer to Fig. 6).

(ix) Fully tighten the screws by means of the wheel-operated screwdriver (Refer Fig. 7) and lock them by caulking.

(x) Refit the insulation piece between the field coil connections and the yoke.

(xi) Refit the field coil connections to the field coil terminal block and re-rivet the block assembly to the yoke.

(*f*) Bearings

The generator is fitted with a ball bearing at the driving end and a porous bronze bearing bush at the commutator end.

Bearings which are worn to such an extent that they allow side movement of the armature shaft must be renewed.

To renew a bearing bush at the commutator end proceed as follows:—

(1) The correct method of renewing the old bush is to use a lipped expanding type extractor. If a tool of this type is not available, the bush can be removed by screwing in an $\frac{11}{16}$ in. (17·46 mm.) tap and withdrawing the bush complete. Care is to be taken when screwing the taps into the bush so as to avoid damaging the end brackets.

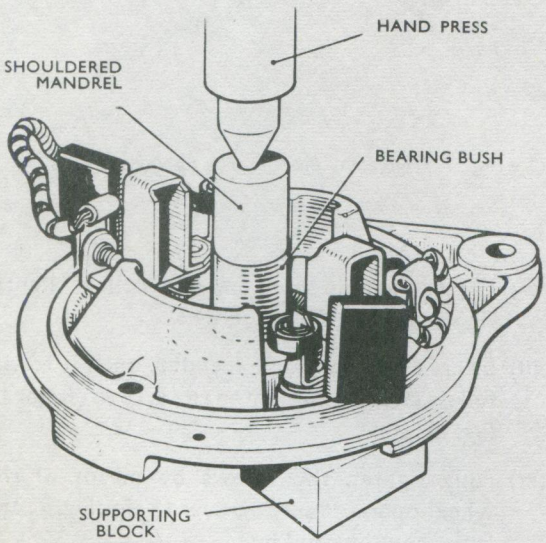

Fig. 8. *Method of fitting porous bronze bushes*

(2) Press the new bearing bush into the end bracket using a shouldered, highly polished mandrel of the same diameter as the armature shaft (Refer Fig. 8). Porous bronze bushes must not be opened out after fitting or the porosity of the bush may be impaired.

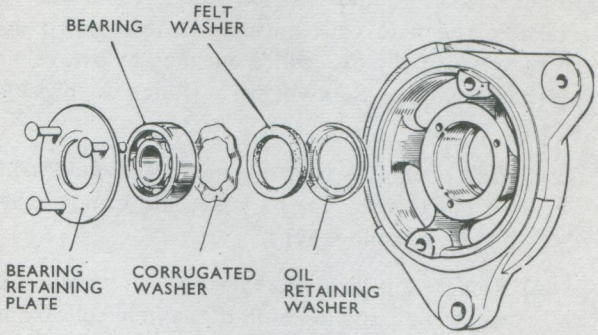

Fig. 9. *Drive-end bracket, dismantled view*

Note: Prior to fitting, porous bronze bushes are to be immersed in clean engine oil for a period of 24 hours, thus allowing oil to seep into the pores of bushes. When bushes are needed for urgent repairs the immersion period can be reduced by heating the oil to a temperature of 100°C. (212°F.) for two hours and then allowing the oil to cool before withdrawing the bush.

To renew a ball bearing (Refer to Fig. 9) which is a press fit in the driving-end bracket proceed as follows:—

(1) Drill out the rivet securing the field coil terminal assembly to the yoke and unsolder the field coil connections.

(2) Press the bearing out of the end bracket and remove the corrugated washer, felt washer and oil retaining washer.

(3) Prior to fitting the new bearing, inspect it for cleanliness and pack with high melting point grease.

(4) Place the oil retaining washer, felt washer and corrugated washer in the bearing housing in the end bracket.

(5) Locate the bearing in the housing and push it home (hand pressure only is required).

(6) Fit the bearing retaining plate. Insert the new rivets from the inside of the end bracket and roll the rivets by means of a punch to secure the plate rigidly in position.

(7) It is recommended that a piece of mild steel tubing 4 in. (101·6 mm.) long with an internal diameter $\frac{11}{16}$ in. (17·46 mm.) is used to support the inner race of the bearing when fitting the driving-end bracket to the armature shaft.

(8) Under no circumstances is the driving-end bracket to be used as a support as this would cause damage to the corrugated washer and as a result the armature would not maintain the correct position and the bushes may overhang the edge of the commutator.

(*g*) Reassembly

In the main, the reassembly of the generator is a reversal of the operations described in Para. *b*. After reassembly lubricate the commutator-end bearing, referring to Para. *a* for the correct procedure.

CONTROL BOX

GENERAL

In the new system, the control box contains, in addition to the normal cut-out, two separate regulators with their contacts in series with the generator field circuit; one regulator is shunt-wound and responsive only to voltage, the other series-wound and responsive to current.

Operation of the Current-voltage Regulator (Refer to Fig. 10)

When the engine is started and its speed increased, the generator terminal voltage rises, the field being energised through the normally closed contacts of the current and voltage regulators and the low resistance frequency coil on the voltage regulator. When the generator voltage reaches a pre-determined value, the cut-out relay contacts are closed by the shunt coil electromagnetism in the normal manner, so connecting generator to battery.

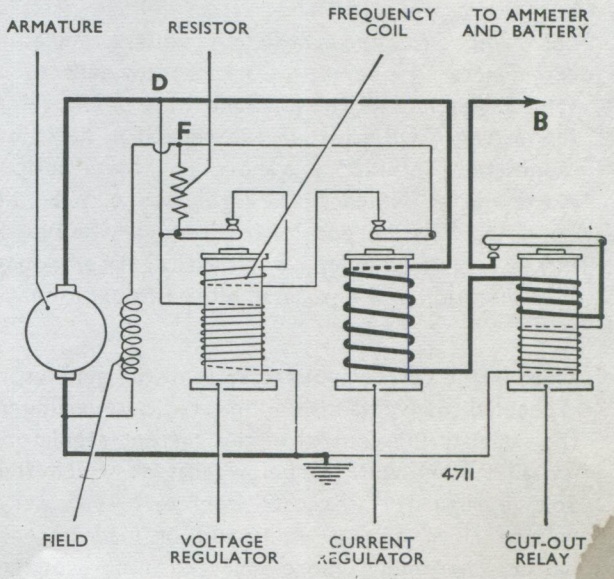

Fig. 10. *Circuit diagram of current-voltage control system*

Further increase in speed results in further rise in terminal voltage until, assuming first conditions of charged battery with no or only light load, the operating setting of the voltage regulator is reached. The armature is set into vibration, inserting the field resistance into circuit in the well-known manner to maintain a predetermined generator voltage at all speeds and so produce a current output proportional to the potential difference between generator and battery.

If, however, because of a low state of charge of the battery, or the electrical loading, or a combination of both, the generated voltage does not rise to that at which the voltage regulator commences operation, a means of limiting the output current to a safe value is necessary, and this is the function of the current regulator. When the current from the generator, flowing through the current regulator winding, reaches the maximum rated output for the particular size of machine, the current regulator armature is set into vibration, similarly inserting the resistance into the field circuit and thus preventing the current from exceeding the predetermined value. As the battery becomes charged and the system voltage rises, a point will be reached at which the voltage regulator commences to operate. Current now falls to a value depending on the load and state of charge of the battery, and the current regulator becomes inoperative. In practice, a short changeover period exists during which both regulators may be in operation. The purpose of the frequency coil is to increase the frequency of voltage regulator armature vibration and ensure stability of operation.

Thus, in the current-voltage system, the generator is enabled to give its maximum rated output, under the safeguarding control of the current regulator, for all system voltages below that at which the voltage regulator is set to operate. As battery voltage rises, due to reduction of load or the battery becoming more charged, the voltage regulator takes over, controlling output according to the load and state of charge of the battery.

SERVICING

NOTE: Before altering any control box settings, it is important to check that the battery, generator and all charging circuit connections are in order.

(a) Voltage Regulator Adjustment

Open Circuit Settings

Ambient Temperature	Voltage Setting
10°C. (50°F.)	15·1—15·7
20°C. (68°F.)	14·9—15·5
30°C. (86°F.)	14·7—15·3
40°C. (104°F.)	14·5—15·1

Method of Adjustment

Checking and adjusting should be completed as rapidly as possible to avoid heating errors.

(i) Disconnect the two brown with white cables from control box terminal "B" and join the ends of these cables together.

(ii) Connect a first-grade 0—20 moving coil voltmeter between control box terminal "D" and a good earthing point.

(iii) Start the engine and run the generator at 3,000 r.p.m.

(iv) Observe the voltmeter pointer.

The voltmeter reading should be steady and lie between the appropriate limits given above according to the temperature. An unsteady reading may be due to dirty contacts. If the reading occurs outside the appropriate limits, an adjustment must be made. In this event, continue as follows:—

(v) Stop the engine and remove the control box cover.

(vi) Restart the engine and run the generator at 3,000 r.p.m.

(vii) Slacken the locknut (when applicable) of the voltage adjustment screw and turn the screw

(clockwise to raise the setting or anti-clockwise to lower it) until the correct setting is obtained (see Figs. 11 and 12).

(viii) Retighten the locknut (when applicable).

(ix) Check the setting by stopping the engine and again raising the generator speed to 3,000 r.p.m.

(x) Restore the original connections and refit the cover.

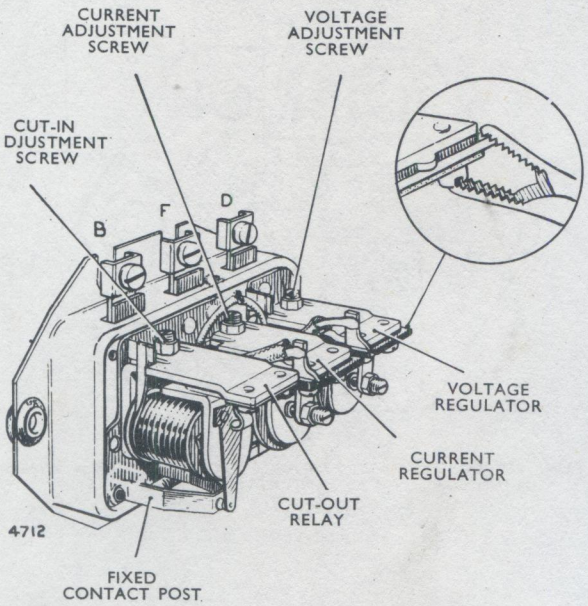

Fig. 11. *Control box with cover removed—Series I & II*

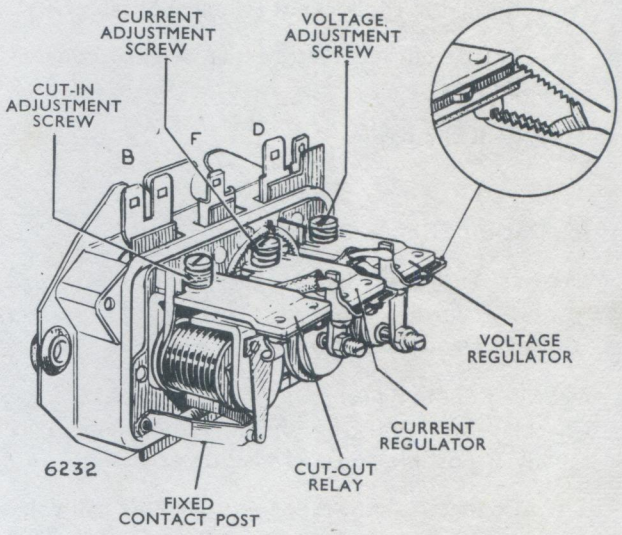

Fig. 12. *Control box with cover removed—Series III onwards*

voltage regulator must therefore be rendered inoperative and this is the function of the crocodile clip used in paragraph (ii) to short out the voltage regulator contacts.

(i) Remove the control box cover.

(ii) Place a crocodile clip between the insulated fixed contact bracket of the voltage regulator and voltage regulator frame (see Figs. 11 and 12).

(b) Current Regulator Adjustment

On-Load Setting

The current regulator on-load setting is equal to the maximum rated output of the generator.

Method of Adjustment

The generator must be made to develop its maximum rated output, whatever the state of charge of the battery might be at the time of setting. The

(iii) Disconnect the cable from control box terminal "B" and connect a first-grade 0—40 moving coil ammeter between this cable and terminal "B".

(iv) Switch on all lamps and accessories.

(v) Start the engine and run the generator at 4,000 r.p.m.

(vi) Observe the ammeter pointer.

The ammeter pointer should be steady and indicate a current equal to the maximum rated output of the generator, i.e. 22 amperes (PV-5 generators) or 25 amperes (PV-6). An unsteady reading may be due to dirty contacts. If the reading is too high or too low, an adjustment must be made.

In this event, continue as follows:—

(vii) Slacken the locknut (when applicable) of the current adjustment screw and turn the screw (clockwise to raise the setting or anti-clockwise to lower it) until the correct setting is obtained.

(viii) Retighten the locknut (when applicable).

(ix) Switch off and restore the original connections.

(x) Refit the cover.

(c) Cut-out Relay Adjustment

Electrical Settings

Cut-in voltage:	12·7—13·3
Drop-off voltage:	9·5—11·0

Method of Cut-in Adjustment

Checking and adjusting should be completed as rapidly as possible to avoid heating errors.

(i) Connect a first-grade 0—20 moving coil voltmeter between control box terminal "D" and a good earthing point.

(ii) Switch on an electrical load, such as the headlamps.

(iii) Start engine and slowly increase the engine speed.

(iv) Observe the voltmeter pointer.

Closure of the contacts, indicated by a slight drop in the voltmeter reading, should occur between the limits given above. If the cut-in occurs outside these limits, an adjustment must be made. In this event, continue as follows:—

(v) Remove the control box cover.

(vi) Slacken the locknut (when applicable) of the cut-out relay adjustment screw and turn the screw (clockwise to raise the setting or anti-clockwise to lower it), until the correct setting is obtained (see Figs. 11 and 12).

(vii) Retighten the locknut (when applicable).

(viii) Restore the original connections and refit the cover.

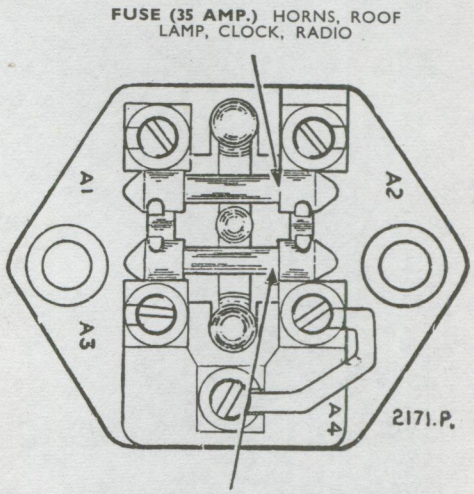

Fig. 13. *Fuse unit—Series I & II*

Method of Drop-off Adjustment

Disconnect the cables from control box terminal "B" and connect a first-grade 0—20 moving coil voltmeter between this terminal and earth. Start the engine and run up to speed. Slowly decelerate and observe the voltmeter pointer.

Opening of the contacts, indicated by the voltmeter pointer dropping to zero, should occur between the limits given above. If the drop-off occurs outside these limits, an adjustment must be made. In this event, continue as follows:—

Stop the engine and remove the control box

cover. Adjust the height of the fixed contact post by carefully bowing or straightening the legs of the post to reduce or to raise the drop-off voltage, respectively. Test and, if necessary, re-adjust until the correct drop-off setting is obtained. Restore the original connections and refit the cover.

(d) Cleaning Contacts

Regulator Contacts. To clean the voltage or current regulator contacts, use fine carborundum stone or silicon carbide paper followed by methylated spirits (denatured alcohol).

Cut-out Relay Contacts. To clean the cut-out relay contacts, use a strip of fine glasspaper—never carborundum stone or emery cloth.

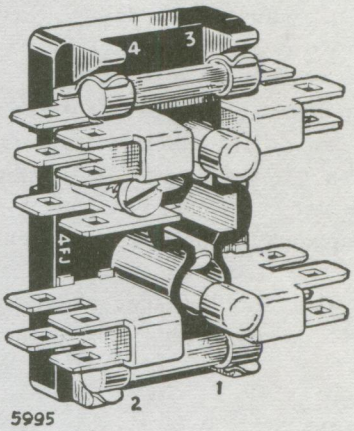

Fig. 14. *Fuse unit—Series III onwards*

FUSES (Refer Figs. 13 and 14)

Two 35 amp. fuses with spares are carried by a separate Fuse Unit. The fuse which bridges terminal blocks A1—A2 (see Figs. 13 and 14) is to protect auxiliary circuits independent of the ignition switch. The fuse bridging terminals A3—A4 protects auxiliary circuits controlled by the ignition switch.

STARTER MOTOR

GENERAL

The starter motor is a four-pole, four-brush machine having an extended shaft to carry the engine engagement gear or starter drive. This motor is controlled by a solenoid switch mounted on the front of the scuttle and operated by the ignition switch on the instrument panel. In an emergency or for testing purposes, the solenoid can be operated by hand by pressing the rubber cap covering the plunger.

ROUTINE MAINTENANCE

The only maintenance normally required by the motor is an occasional checking of brush-gear and commutator. Remove the metal band cover, check that the brushes move freely in their holders by holding back the brush springs and pulling gently on the flexible connectors. If a brush is inclined to stick, remove it from its holder and clean its sides with a petrol-moistened cloth. Be careful to replace brushes in their original position

in order to retain the "bedding". Brushes which have worn to $\frac{5}{16}$ in. (7·93 mm.) must be renewed.

The commutator should be clean, free from oil or dirt and should have a polished appearance. If it is dirty, clean it by pressing a fine dry cloth against it while the starter is turned by hand by means of a spanner applied to the squared extension of the shaft. Access to the squared shaft is gained by removing the thimble-shaped metal cover. If the commutator is very dirty, moisten the cloth with petrol.

SERVICING

(*a*) Testing in position

(1) Switch on the lamps and operate the starter control. If the lights go dim, but the starter motor is not heard to operate, an indication is given that circuit for continuity from battery to starter motor windings but that the armature is not rotating for some reason, possibly the pinion is meshed permanently with the geared ring on the flywheel. In this case the motor must be removed from the engine for examination.

(2) Should the lamps retain their full brilliance when the starter switch is operated, check the circuit for continuity from battery to starter motor via the starter switch, and examine the connections at these units. If the switch is found to be faulty, a new switch must be fitted. If the supply voltage is found to be applied to the motor when the switch is operated an internal fault in the motor is indicated and the unit must be removed from the engine for examination.

(3) Sluggish or slow action of the starter motor is usually caused by a poor connection in the wiring giving rise to a high resistance in the motor circuit. Check as described above.

(4) If the motor is heard to operate, but does not crank the engine, indication is given of damage to the drive.

(*b*) Bench-testing and examination of Brush-gear and Commutator

(1) If it is necessary to remove the motor from the engine, first proceed as follows:—

Disconnect the cable from the positive battery terminal to avoid any danger of causing short circuits.

Disconnect the heavy cable from the starter motor.

(2) After removing the starter motor from the engine, secure the body in a vice and test by connecting it with heavy gauge cables to a 12-volt battery. One cable must be connected to the starter terminal and the other held against the body or end bracket. Under these light load conditions, the starter should run at a speed of 7,400—8,500 r.p.m.

(3) If the operation of the motor is unsatisfactory, remove the cover band and examine the brushes and commutator. Hold back each of the brush springs and move the brush by pulling gently on its flexible connector. If the movement is sluggish, remove the brush from its holder and ease the sides by lightly polishing on a smooth file. Always replace brushes in their original positions. If the brushes are worn to $\frac{5}{16}$ in. (7·93 mm.) they must be renewed (see below).

Check the tension of the brush springs with a spring scale. The correct tension is 30 to 40 ozs.

A new spring should be fitted if the tension is low.

If the commutator is blackened or dirty, clean it by holding a petrol-moistened cloth against it while the armature is rotated.

(4) Retest the starter as described under (2) above. If the operation is still unsatisfactory, the unit must be dismantled for detailed inspection and testing.

(*c*) To dismantle (see Figs. 15 and 16)

(1) Remove the cover band, hold back the brush springs and lift the brushes from their holders.

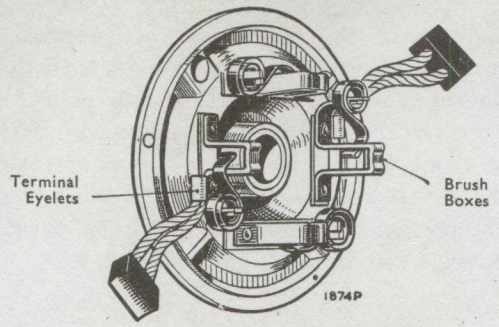

Fig. 15. *Commutator-end bracket brush connections*

(2) Remove the terminal nuts from the terminal post.

(3) Remove the two through bolts from the commutator-end bracket, and take off the commutator-end bracket from the yoke.

(4) Remove the driving-end bracket complete with armature and drive from the starting motor yoke. If it is necessary to remove the armature from the driving-end bracket it can be done by means of a hand press after the drive has been dismantled.

(*d*) Replacement of Brushes

If the brushes are worn to $\frac{5}{16}$ in. (7·93 mm.) they must be renewed.

Two of the brushes are connected to terminal eyelets attached to the brush boxes on the commutator-end bracket and two are connected to tappings on the field coils (see Figs. 17 and 18).

The flexible connectors must be removed by unsoldering and the connectors of the new brushes secured in their place by soldering. The brushes are pre-formed so that bedding to the commutator is unnecessary.

(*e*) Commutator

A commutator in good condition will be smooth and free from pits and burned spots. Clean the commutator with a petrol-moistened cloth. If this is ineffective, carefully polish with a strip of fine glass paper while rotating the armature. To remedy a badly worn commutator, dismantle the starter drive (as described under "Starter Drive") and remove the armature from the end bracket. Now mount the armature in a lathe, rotate at high speed and take a light cut with a very sharp tool.

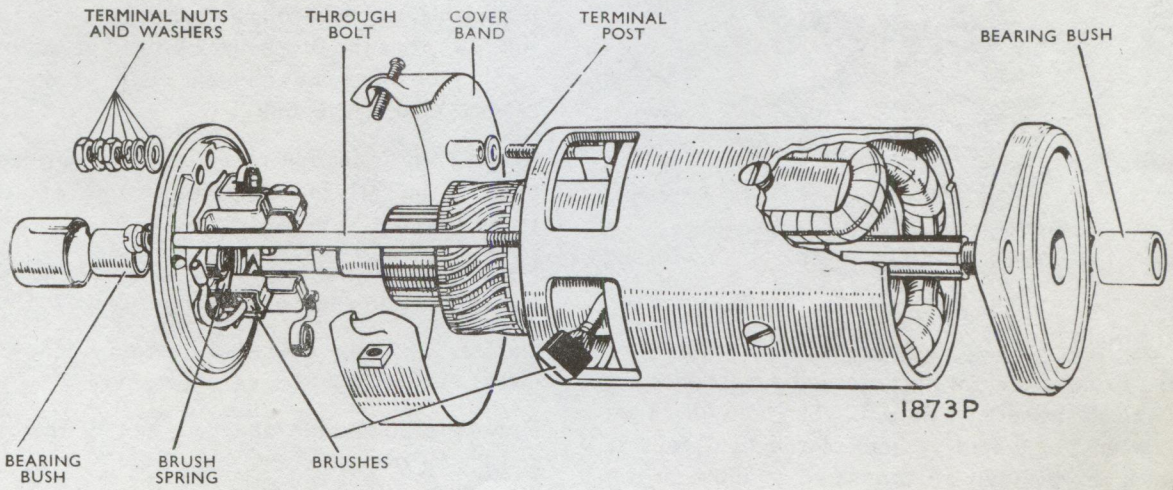

Fig. 16. *Exploded view of starter motor*

Do not remove any more metal than necessary.

Finally polish with a very fine glass paper. The insulators between the commutator segments **must not be undercut.**

(*f*) Armature

Examination of the armature may reveal the cause of failure, e.g., conductors lifted from the commutator due to the starter drive being engaged while the engine is running and causing the armature to be rotated at an excessive speed. A damaged armature must in all cases be replaced—no attempt should be made to machine the armature core or to true a distorted armature shaft.

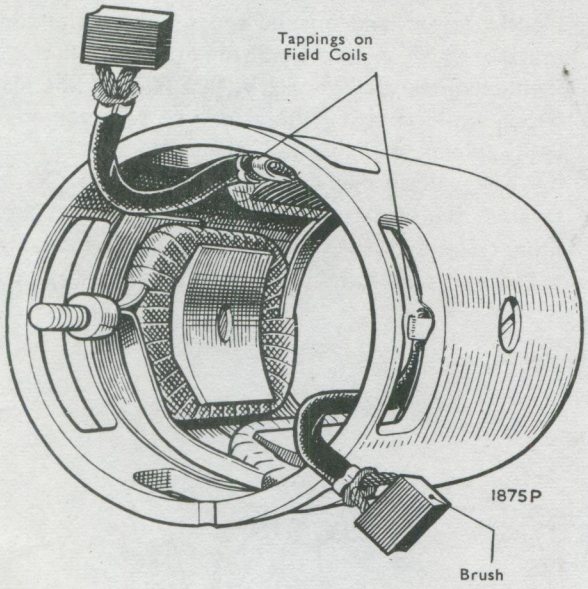

Fig. 17. *Brush connections to field coil tappings*

(*g*) Field Coils

(1) Test the field coils for continuity by connecting a 12-volt battery with a 12-volt bulb in series between the tapping points of the field coils at which the brushes are connected. Failure of the lamp to light indicates an open circuit in the wiring of the field coils. (Fig. 18).

(2) Lighting of the lamp does not necessarily mean that the field coils are in order, as it is possible that one of them may be earthed to a pole shoe or to the yoke. This may be checked with a 110 volt a.c. test lamp, the test leads being connected to one of the field coil tapping points and to a clean part of the yoke. Should the lamp light it indicates that the field coils are earthed to the yoke.

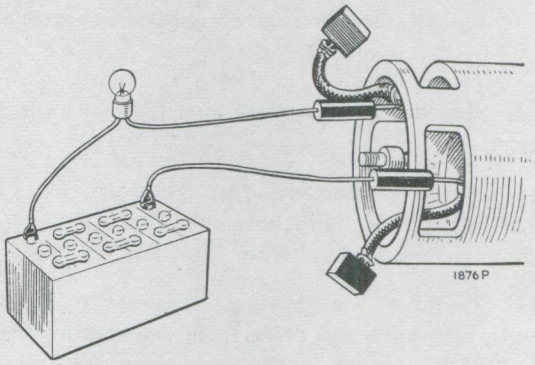

Fig. 18. *Checking field coils for open circuit*

In either case, unless a replacement starter motor is available, the field coils must be renewed. To do this, carry out the procedure outlined below, using a pole shoe expander and a wheel-operated screwdriver. (See Figs. 6 and 7).

Remove the insulation piece which is provided to prevent the intercoil connectors from contacting with the yoke.

Mark the yoke and pole shoes in order that they can be fitted in their original positions.

Unscrew the four pole shoe retaining screws by means of a wheel-operated screwdriver.

Draw the pole shoes and coils out of the yoke and lift off the coils.

Fit the new field coils over the pole shoes and place them in position inside the yoke. Take care to

ensure that the taping of the field coils is not trapped between the pole shoes and the yoke.

Locate the pole shoes and field coils by lightly tightening the fixing screws.

Insert the pole shoe expander, open it to its fullest extent and tighten the screws (see Figs. 6 and 7).

Finally tighten the screws by means of the wheel-operated screwdriver.

Replace the insulation piece between the field connections and the yoke.

(*h*) Bearings

Bearings which are worn to such an extent that they will allow excessive side play of the armature shaft must be replaced. To replace the bearing bushes proceed as follows:—

(1) Press the bearing bush out of the end bracket.

(2) Press the new bearing bush into the end bracket using a shouldered, highly polished mandrel of the same diameter as the shaft which is to fit in the bearing. (Fig. 19). Porous bronze bushes must not be opened out after fitting, or the porosity of the bush may be impaired.

Note

Before fitting a new porous bronze bearing bush it should be completely immersed for 24 hours in clean thin engine oil. In cases of extreme urgency this period may be shortened by heating the oil to 100°C. (212°F.) when the time of immersion may be reduced to 2 hours—the oil being allowed to cool before withdrawal of the bush.

(*j*) Reassembly

The reassembly of the starter motor is a reversal of the dismantling procedure.

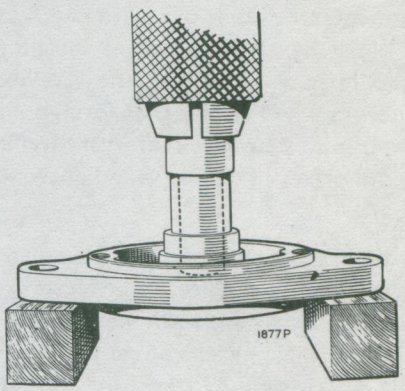

Fig. 19. *Fitting bearing bushes*

"S" TYPE STARTER DRIVE

GENERAL (Refer Figs. 20 and 21)

The pinion is mounted on a screwed sleeve (E), which is carried on splines on the armature shaft. The sleeve is so arranged that it can move along the shaft against a compression spring to reduce the shock loading at the moment engagement takes place.

When the starter switch is operated the armature shaft and screwed sleeve (E) rotate. Owing to the inertia of the pinion, the latter is caused to move along the sleeve until the pinion comes into engagement with the flywheel ring. The starter will then turn the engine.

As soon as the engine fires and commences to run

under its own power the flywheel will be driven faster by the engine than the starter. This will cause the pinion to be screwed back along the sleeve, so drawing the pinion out of mesh with the flywheel teeth. In this manner the drive safeguards the starter against damage due to being driven at high speeds.

A pinion restraining spring (G) is incorporated in the drive. This spring prevents the pinion vibrating into mesh when the engine is running.

ROUTINE MAINTENANCE

If any difficulty is experienced with the starting motor not meshing correctly with the flywheel, it may be that the drive requires cleaning. The pinion should move freely on the screwed sleeve (E) ; if there is any dirt or other foreign matter on the sleeve it must be washed off with paraffin. After washing the drive, lubricate very lightly with thin machine oil.

In the event of the pinion becoming jammed in mesh with the flywheel, it can usually be freed by turning the starter motor armature by means of a spanner applied to the shaft extension at the commutator end. This is accessible by removing the cap, which is a push fit.

DISMANTLING AND REASSEMBLY

Having removed the armature as described in the section dealing with starter motors, the drive can be dismantled as follows (see Figs. 20 and 21):—

Remove the split pin (A) from the shaft nut (B) at the end of the drive.

Hold the squared end of the starter shaft at the commutator end with a spanner and unscrew the shaft nut.

Remove the main spring (C), washer (D), screwed sleeve with pinion (E), collar (F), pinion restraining spring (G) and sleeve (H).

The reassembly of the drive is a reversal of the dismantling procedure.

Note

Should either the shaft nut or screwed sleeve be damaged, then a replacement assembly of screwed sleeve and shaft nut must be fitted. These components must not be renewed individually.

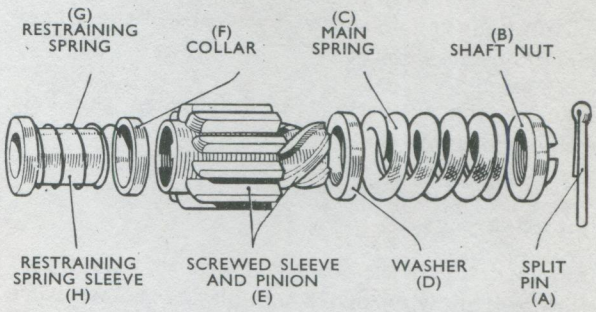

Fig. 20. *Exploded view of starter drive*

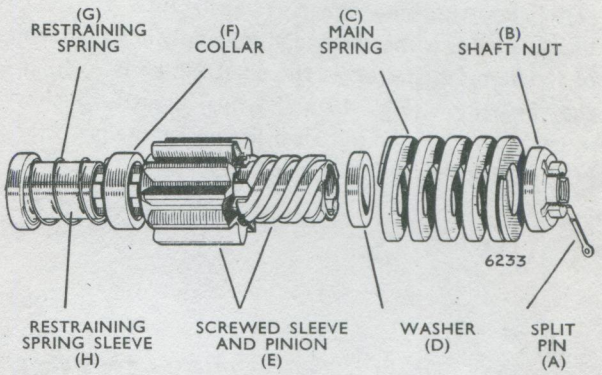

Fig. 21. *Exploded view of starter drive showing run-off helix drive*

Run-off Helix Drive

To meet abnormally severe operating conditions, a service conversion set is available comprising Pinion & Sleeve Assembly 292042 and Main Spring 291835 for converting the original fitment to Run-off Helix Drive, as shown in Fig. 21.

DISTRIBUTOR

GENERAL (Refer Figs. 22 and 23)

Mounted on the distributor shaft, immediately beneath the contact breaker, is a centrifugally operated timing control mechanism. It consists of a pair of spring-loaded governor weights, linked by lever action to the contact breaker cam. Under the centrifugal force imparted by increasing engine speed, the governor weights swing out against the spring pressure to advance the contact breaker cam, and thereby the spark, to suit engine conditions at the greater speed.

A built-in vacuum-operated timing control is also included, designed to give additional advance under part-throttle conditions. One side of a spring-loaded diaphragm is subjected to pressure variations in the induction pipe. This diaphragm acts through a lever mechanism to rotate the heel of the contact breaker about the cam, thus advancing the spark for part-throttle operating conditions. There is also a micrometer adjustment by means of which fine alterations in timing can be made to allow for changes in running conditions, e.g., state of carbonisation, change of fuel etc.

A completely sealed metallised paper capacitor is utilised. This has the property of being self-sealing; should the capacitor break down, the metallic film around the point of rupture is vaporised away by the heat of the spark, so preventing a permanent short circuit.

The H.T. pickup brush is of composite construction, the centre portion consisting of a resistive compound and the two end portions of softer carbon. The resistive portion of this carbon brush which is in circuit between the coil and the distributor gives a measure of radio interference suppression. Under no circumstances must a short non-resistive brush

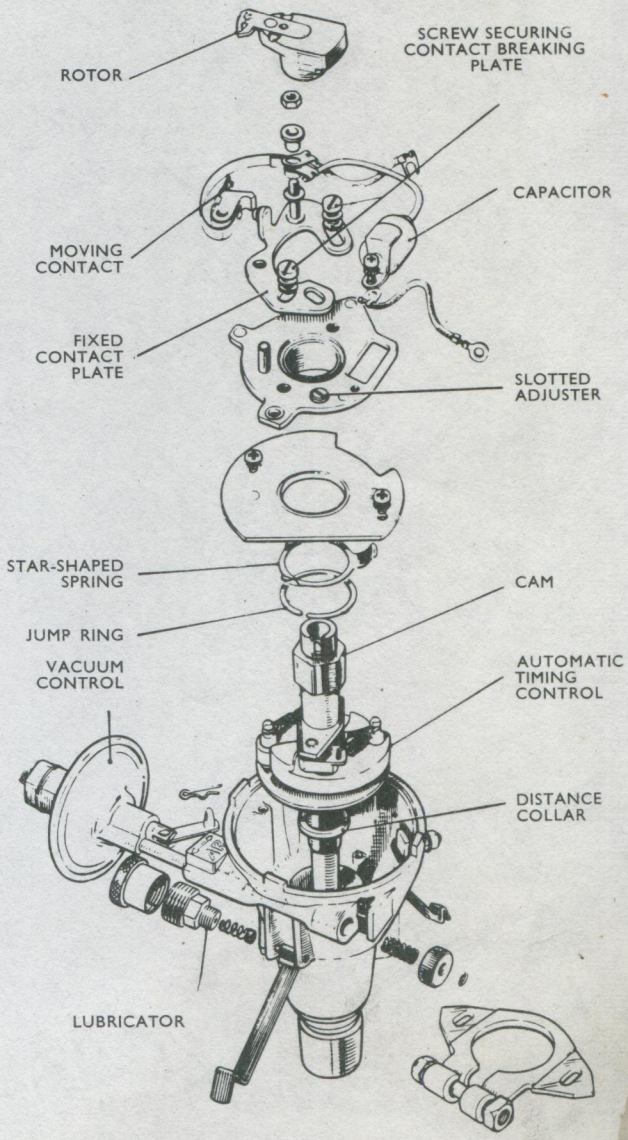

Fig. 22. *Exploded view of distributor—early models*

be used as a replacement for one of these longer resistive brushes.

ROUTINE MAINTENANCE

In general, lubrication and cleaning constitute normal maintenance procedure.

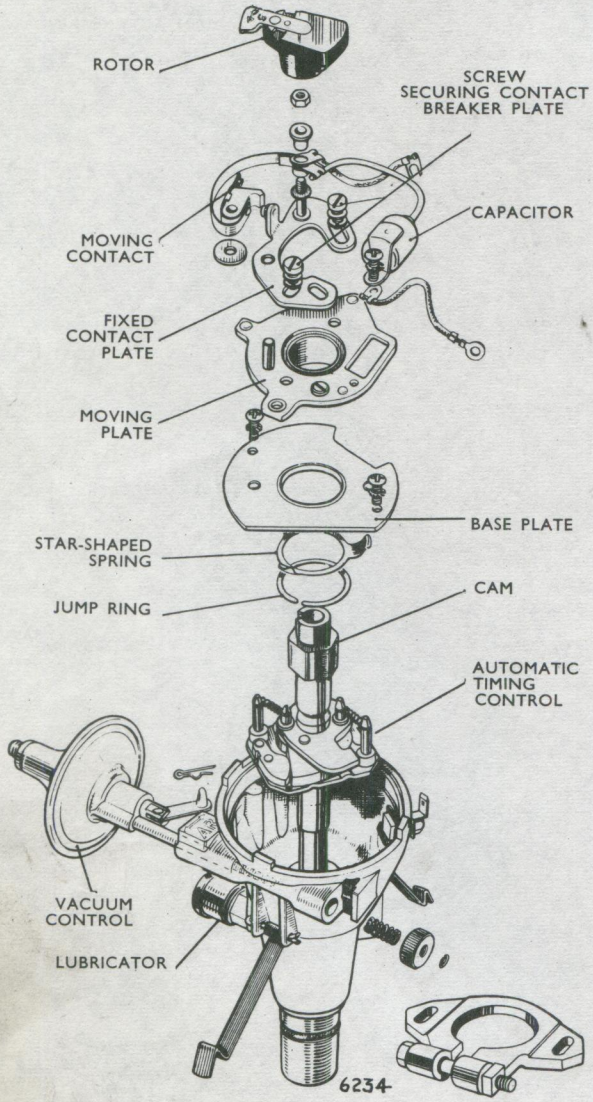

Fig. 23. *Exploded view of distributor—later models*

(*a*) Lubrication

Take great care to prevent oil or grease from getting on or near the contacts.

Give the lubricator on the side of the distributor body one half turn, clockwise, to lubricate the distributor shaft.

Add a few drops of thin engine oil (S.A.E. 30) through the aperture at the edge of the contact breaker base plate to lubricate the centrifugal timing control.

Lightly smear the cam with clean engine oil. Lift off the rotor arm and apply to the spindle a few drops of thin machine oil to lubricate the cam bearing. It is not necessary to remove the exposed screw, since it affords a clearance to permit the passage of oil.

Apply a drop of clean engine oil to the exposed tip of the pivot post.

Refit the rotor arm, carefully locating its moulded projection in the keyway in the spindle and pushing it on as far as it will go. Unscrew the cap of the distributor shaft lubricator and refill the cap with clean engine oil.

(*b*) Cleaning

Thoroughly clean the moulded distributor cover, inside and out, with a soft dry cloth, paying particular attention to the spaces between the metal electrodes. Ensure that the carbon brush moves freely in its holder.

Examine the contact breaker. The contacts must be quite free from grease or oil. If they are burned or blackened, clean them with very fine carborundum stone or emery cloth, then wipe with a petrol-moistened cloth (Refer Fig. 24).

Cleaning is facilitated by removing the contact breaker lever. To do this, remove the nut, insulating piece and connections from the post to which the end of the contact breaker spring is anchored. The contact breaker lever may now be removed from its pivot.

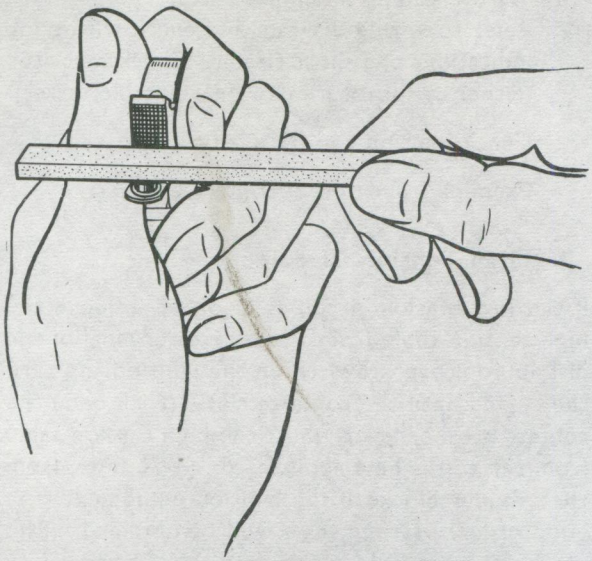

Fig. 24. *Cleaning contact breaker points*

Before refitting the contact breaker, smear the pivot post with grease.

After cleaning, check the contact breaker setting (Refer Fig. 25).

Turn the engine by hand until the contacts show the maximum opening. This should measure 0·015 in. (0·38 mm.). If the measurement is incorrect, keep the engine in a position giving maximum opening, and slacken the two screws securing the fixed contact plate. A slotted adjuster is fitted in this plate by means of which the contact breaker can be opened or closed, as required.

Tighten the screws. Recheck the setting for other positions of the engine giving maximum contact opening.

SERVICING

Before starting to test, make sure that the battery is in good condition.

(*a*) Testing in Position to locate cause of Uneven Firing

Run the engine at a fairly fast idling speed. If possible, short circuit each plug in turn with the blade of an insulated screwdriver or hammer head placed across the terminal to contact the cylinder head. Short circuiting the plug in the defective cylinder will cause no noticeable change in the running note. With the others, however, there will be a pronounced increase in roughness.

If short-circuiting the sparking plugs is not possible, due to their being fitted with shrouded cable connectors, remove each plug connector in turn.

Again, removal of the connection to the defective cylinder will cause no noticeable change in the running note, but there will be a definite increase in roughness when the other plugs are disconnected.

Having thus located the defective cylinder, stop the engine and remove the cable from the sparking plug terminal.

Restart the engine and hold the cable end about $\frac{3}{16}$ in. (4·76 mm.) from the cylinder head. If sparking is strong and regular, the fault lies with the sparking

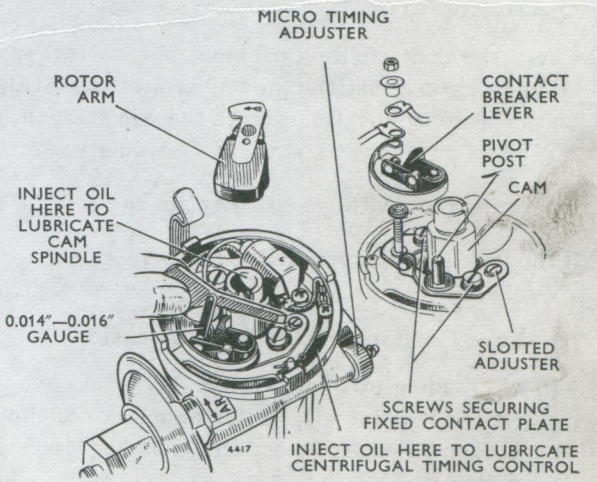

Fig. 25. *General maintenance features*

plug, and it should be removed, cleaned and adjusted, or a replacement fitted. If, however, there is no spark, or only weak irregular sparking, examine the cable from the plug to the distributor moulded cover for deterioration of the insulation, renewing the cable if the insulation is cracked or perished, clean and examine the moulded cover for free movement of the carbon brush. If a replacement brush is necessary, it is important that the correct type is used.

If tracking has occurred, indicated by a thin black line between two or more electrodes or between one of the electrodes and the body, a replacement distributor cover must be fitted.

(*b*) Testing in position to locate cause of Ignition Failure

Spring back the clips in the distributor head and remove the moulded cover, observe the reading on the vehicle ammeter, or on an ammeter connected in series with the battery supply cable. The reading should rise and fall with the closing and opening of the contacts if the low tension wiring is in order. When a reading is given which does not fluctuate, a short circuit, or contacts remaining closed, is indicated. No reading indicates an open circuit in the low tension circuit or badly adjusted or dirty contacts.

Check the contacts for cleanliness and correct gap setting. Ensure that the moving arm moves freely on the pivot. If sluggish, remove the arm and polish the pivot post with a strip of fine emery cloth.

Smear the post with grease. Replace the arm.

If the fault persists, proceed as follows:—

(*c*) Low Tension Circuit Fault-Location

(i) No reading in ammeter test
Refer to wiring diagram and check circuit for broken or loose connections, including ignition switch.

Check the ignition coil by substitution.

(ii) Steady reading in ammeter test
Refer to wiring diagram and check wiring for indications of a short circuit. Check capacitor (either by substitution or on a suitable tester).

Check ignition coil by substitution.

Examine insulation of contact breaker.

(*d*) High Tension Circuit

If the low tension circuit is in order, remove the high tension cable from the centre terminal of the distributor cover. Switch on the ignition and turn the engine until the contacts close. Flick open the contact breaker lever whilst the high tension cable from the coil is held about $\frac{3}{16}$ in. (4·76 mm.) from the cylinder block. If the ignition equipment is in good order, a strong spark will be obtained. If no spark occurs, a fault in the circuit of the secondary winding of the coil is indicated and the coil must be replaced.

Carefully examine the high tension cables and replace them if the rubber insulation is cracked or perished, using the special ignition cable. (See Section "B"—Engine).

To fit new cables pass the cables through the knurled moulded terminals, bare about $\frac{1}{4}$ in. (6·35 mm.) of the ends of the cables, thread through the brass washers (removed from the original cables) and bend back the strands. Finally screw the moulded terminals into the coil moulding or distributor cover.

The cables from the distributor to the sparking plugs **must** be connected in the correct firing order.

(*c*) Dismantling

When dismantling, carefully note the positions in which the various components are fitted, in order to ensure their correct replacement on reassembly.

Note the relation between the driving dog and the rotor electrode and maintain this relation when reassembling the distributor. The amount of dismantling necessary will naturally depend on the repair required.

Spring back the securing clips and remove the moulded cover. Lift the rotor arm off the spindle, carefully levering with a screwdriver if it is tight.

Next take out the split pin securing the vacuum unit link to the rotating contact breaker plate, and remove the two screws at the edge of the contact breaker base. Slacken the two nuts on the low tension terminal and pull the connection from the contact breaker away from the terminal block. The contact breaker assembly can now be lifted off (see (*i*) below). Remove the circlip on the end of the micrometer timing screw, and turn the micrometer nut until the screw and the vacuum unit assembly are freed. Take care not to lose the ratchet and coil springs located under the micrometer nut.

Before attempting to remove the shaft and action plate assembly, first unscrew the complete lubricator from the distributor body and remove the spring and pad.

The complete shaft assembly can now be removed from the distributor body (see (*ii*) below).

(*i*) Contact Breaker

To dismantle the assembly further, remove the nut, insulating piece and connections from the pillar on which the contact breaker spring is anchored.

Lift off the contact breaker lever and the insulating washer beneath it. Remove the two screws securing the fixed contact plate, together with the spring and plain steel washers, and take off the plate. Withdraw the single screw securing the capacitor and contact breaker earthing lead. The contact breaker base assembly can be dismantled by removing the circlip and star washer located under the lower plate.

(*ii*) Shaft and Action plate

To dismantle the assembly further, take out the screw inside the cam and remove the cam and cam foot. The weights, springs and (when applicable) toggles of the centrifugal timing control can now be lifted off the action plate. Note that the distance collar is fitted on the shaft underneath the action plate.

(*f*) Shaft Bearing

The internal surface of the cast iron shank is carefully machined during manufacture to form a bearing for the shaft, and no appreciable wear should occur during the normal service life of the distributor, provided lubrication is carried out as specified.

(*g*) Reassembly

The following instructions assume that complete dismantling has been undertaken.

(i) Reassemble the centrifugal timing control See that the springs are not stretched or damaged.

Place the cam and cam foot assembly over the shaft, engaging the projections on the cam foot with (when applicable) the toggles and fit the securing screw.

(ii) Place the distance collar over the shaft. Smear the shaft with clean engine oil and fit it into the body and shank.

(iii) Refit the vacuum unit into its housing and replace the springs, milled adjusting nut and securing circlip.

(iv) Refit the shaft lubricator.

(v) Replace the connection to the low tension terminal on the inner side of the distributor body and tighten the nuts on the terminal post.

(vi) Before reassembling the contact breaker base assembly, lightly smear the base plate with clean engine oil. Fit the moving contact breaker plate to the base plate and secure with the star washer and circlip. Refit the contact breaker base into the distributor body. Engage the link from the vacuum unit with the bearing bush in the rotating plate,

and secure with the split pin. Insert the two base plate securing screws, one of which also secures one end of the earthing cable.

(vii) Fit the capacitor into position. The eyelet on the end of the contact breaker earthing cable is held under the capacitor fixing screw. Place the fixed contact plate in position and secure lightly with two securing screws. One plain and one spring washer must be fitted under each of these screws.

(viii) Place the insulating washer on the contact breaker pivot post and on the pillar on which the end of the contact breaker spring locates. Refit the contact breaker lever and spring.

(ix) Thread the low tension connector and capacitor eyelets on to the insulating piece, and place these on the pillar which secures the end of the contact breaker spring. Refit the washer and securing nut.

(x) Set the contact gap to 0·015 in. (0·38 mm.) and tighten the securing screws of the fixed contact plate.

(xi) Refit the rotor arm, locating the moulded projection in the rotor arm with the keyway in the shaft and pushing fully home. Refit the moulded cover.

(xii) Before refitting the distributor to the vehicle fill the lubricator cap on the distributor body with clean engine oil.

(*h*) Replacement Contacts

If the contacts are so badly worn that replacement is necessary, they must be renewed as a pair and not individually. After the first 500 miles' (800 km.) running with new contacts fitted, the setting should be checked and the gap reset.

This procedure allows for the initial "bedding in" of the heel.

LAMPS

HEADLAMPS (*Series I and II*)

The headlamps are of the flush fitting type, incorporating Lucas Light Units, or combined reflector and front lens assemblies. "Pre-focus" bulbs are used, so that the bulb filament is always correctly located with regard to the reflector and lens and no adjustment of focusing is required. All lamps incorporate "block pattern" lenses. These lenses provide increased accuracy of beam control, with a resultant improvement in road illumination and decrease in the dazzle caused to other road-users.

Anti-dazzle arrangements

Dipping of the headlamp beams for anti-dazzle purposes is achieved by the use of double-filament bulbs in both of the headlamps. The exact arrangement depends on the legal requirements of the country in which the car is to be used.

Setting

The headlamps should be set so that when the car is normally loaded the main beams are directed straight ahead whilst at the same time they must be parallel with the road as well as with each other. This setting gives the best driving light and also ensures that the "dipped" beam complies with the appropriate British Ministry of Transport Lighting Regulations, and is incapable of dazzling any person

standing on the same horizontal plane as the vehicle, at a greater distance than 25 ft. (7·62 m.) from the lamp, whose eye level is not less than three feet six inches above that plane. Whenever possible the lamps should be set using a Beam Setter; but when this is not possible the lamps can be set by standing the car at a distance of 25 ft. (7·62 m.) or more from a light-coloured wall or screen, and varying the setting until the bright central beams are positioned as shown in Fig. 26.

Only one lamp should be adjusted at a time, the other being covered over.

posed by which the lamp setting can be adjusted as necessary.

Using the aiming board (Fig. 26) check and, if necessary, re-adjust the lamp setting.

To remove the glass and reflector assembly

Remove the headlamp rim as previously described. Grip the glass and reflector assembly with both hands, press the assembly inwards and turn it in an anti-clockwise direction, the lamp assembly can then be detached from the three adjusting screws. Do

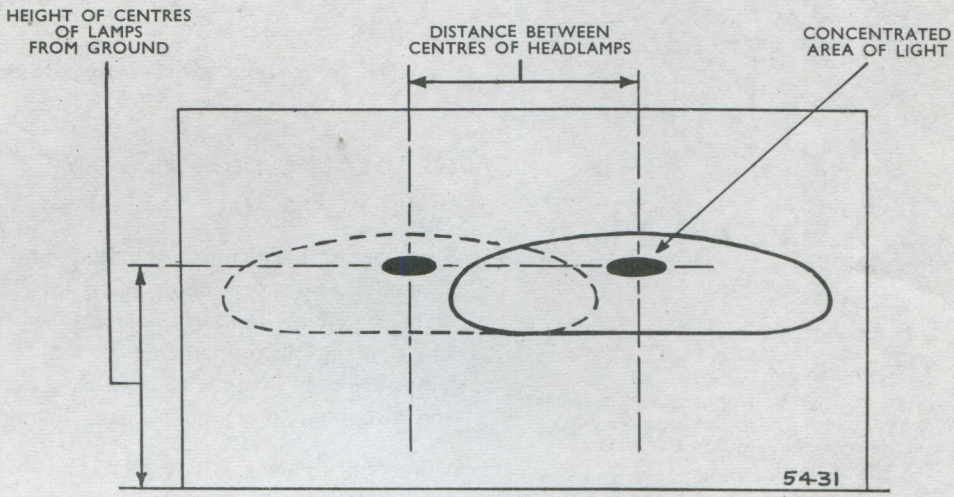

(A) FRONT OF CAR TO BE SQUARE WITH SCREEN
(B) CAR TO BE LOADED AND STANDING ON LEVEL GROUND
(C) RECOMMENDED DISTANCE FOR SETTING IS AT LEAST 25 FT. (7·62 M.)
(D) FOR EASE OF SETTING ONE HEADLAMP SHOULD BE COVERED

Fig. 26. *Headlamp adjustment diagram—Series I & II*

Beam adjustment (Refer to Fig. 27)

Remove the retaining screw which secures the headlamp rim, detach the rim and take off the dust-excluding rubber.

Three spring-loaded adjusting screws are now exposed by which the lamp setting can be adjusted as necessary.

not disturb the three adjusting screws otherwise the adjustment of the lamp will be altered.

To refit the headlamp assembly reverse the foregoing procedure.

Note: The glass and reflector unit is a sealed

assembly, the edge of the reflector being rolled over the edge of the glass. Therefore no attempt is to be made to dismantle it.

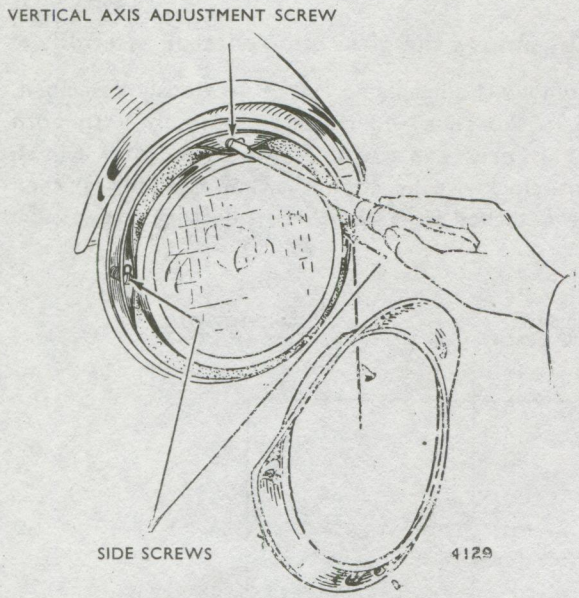

Removal of lamp front and adjustment of headlamp alignment
To adjust beam in vertical axis, turn top screw as shown above.
To adjust beam in horizontal axis, turn side screws.

Fig. 27. *Adjustment of headlamp alignment—Series I & II*

To renew bulbs (Refer to Fig. 28)

Remove the lamp rim, the glass and reflector assembly as previously described. Press the adaptor inwards and turn slightly to align the arrows etched on the adaptor and reflector respectively. Withdraw the adaptor and remove the bulb.

To reassemble the adaptor to the reflector, align the arrows etched on the two components, press the adaptor inwards and turn clockwise.

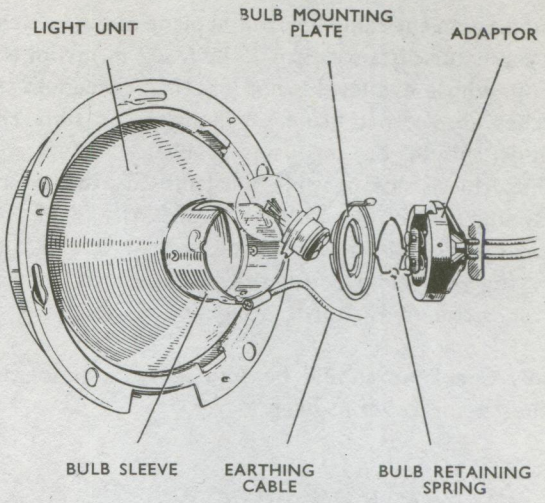

Fig. 28. *Exploded view of headlamp—Series I & II*

HEADLAMPS (*Series III onwards*) (Refer to Fig. 29)

Two pairs of headlamps are employed on the Series III models, each pair being of $5\frac{3}{4}$ in. (127·75 mm.) diameter. The inboard lamps are fitted with single main beam filaments whilst the outboard lamps are each fitted with a meeting beam filament and a supplementary main beam filament.

When full lighting is required, the inboard lamps each give $37\frac{1}{2}$ watts of main beam driving light, which is supplemented by the outboard lamps providing light of similar power but directed in a fan-like shape closer to the car. Main beam driving, therefore, provides lighting with a total power of 150 watts.

Dipping the lights extinguishes the inboard lamps and dips the outboard lamps on to 50-watt filaments to provide 100 watts of carefully distributed light.

The lamp glass, reflector and filament are manufactured as a complete unit which cannot be dismantled; therefore, no attempt should be made to do so.

In the event of failure, the complete headlamp assembly must be renewed, this does not apply to

vehicles in certain export territories where the outboard lamp units are fitted with pre-focus bulbs which can be renewed, in the manner described under the heading "To remove headlamp unit".

For identification purposes on home market vehicles, the outboard lamp units have the marking "2A" on the glass whilst the inboard units have "1A" marked on the glass.

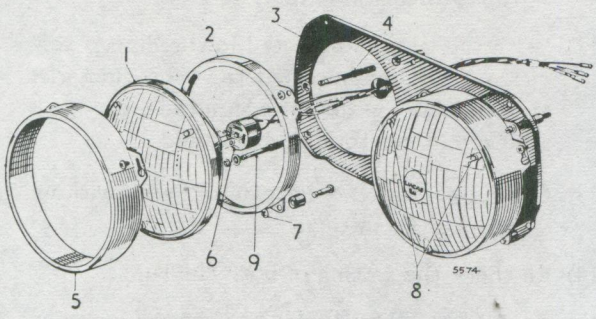

1. LIGHT UNIT
2. SEATING RIM
3. MOUNTING PLATE
4. VERTICAL ADJUSTING SCREW AND SPRING
5. FRONT RIM
6. ADAPTOR
7. TRIMMING PIVOT
8. AIMING PADS
9. LATERAL ADJUSTING SCREW AND SPRING

Fig. 29. *Exploded view of headlamp—Series III onwards*

To remove headlamp unit (Refer to Fig. 29)

Remove the lamp bezel retaining screws and detach the bezel from the lamps.

Slacken the three cross-head screws securing the lamp and rim and turn the rim slightly in an anti-clockwise direction which will align the larger end of the three key-hole slots, in the periphery of the rim, with the screw heads.

Release the rim and lamp unit. The lamp can be completely removed after disconnecting the wiring adaptor.

In territories where bulbs are renewable in the outboard headlamps, the bulb is removed by first compressing the two ends of the retaining spring attached at the rear of the reflector, and then withdrawing the bulb complete with its holder.

Beam adjustment (Refer to Fig. 29)

Each headlamp is provided with adjusting screws which pivot about a rubber buffer. The adjusting screw (4) provides adjustment in the vertical plane whilst the adjusting screw (9) provides adjustment in the lateral plane.

This type of sealed headlamp is so designed that adjustment can be accurately undertaken using a spirit-level type beam setter. Reference to the illustration indicates three glass "aiming pads" (8). These take the form of projections moulded integral around the outer front edge of the lamp glass where their purpose is to provide a reference plane for beam aiming.

It is desirable to use a reputable brand of spirit-level type beam setter if the best standards of accuracy and speed are to be obtained. Advice is available on application to the Rootes Group Development Section at Coventry, in respect of all Factory approved equipment.

Should a spirit-level type beam setter not be available, the use of an optical-type beam setter can be employed providing it is of the type (Lucas No. 571119) that can be adjusted in both horizontal and vertical planes to allow No. 2A units to be set with the meeting beam 2° Down and 2° Left, and No. 1A units $\frac{1}{4}$° Down, 0° Left.

WARNING: No. 2A units must NEVER be set under main beam conditions.

If the use of neither type of beam setter is available, a fair degree of accuracy can be attained by the use of aiming boards (Refer to Figs. 30 to 33) which are positioned at a distance of 25ft. (7·62 m.) from the front of the vehicle and parallel with the rear axle—the floor being flat and level with the base of the aiming board. For 2A lamps which have renewable bulbs fitted, either the special optical-type beam setter (see above) or the aiming board method can be employed.

Using the aiming board method proceed as follows:—

(1) Ensure that the car is parked (handbrake on) on level ground.

(2) Ensure that the front of the car is parallel with the aiming board which is to be positioned at a distance of 25 ft. (7·62 m.) from the car.

Note: (V) is the vertical centre line straight ahead of the lamp centre and (H) is the horizontal centre-line which is the same height as the lamp centre.

(3) Either load the car with two adults or simulate this load by adding weights to the car.

(4) Remove the bezel from the headlamps.

(5) Clean the glass of the inboard lamp.

(6) Adjustment is to be commenced at one inboard lamp; mask the remaining lamps.

(7) Turn the adjusting screws inwards to their full extent.

(8) With the lamp illuminated in the main beam condition, turn the adjusting screws anti-clockwise as necessary until the required setting is achieved (Refer to Fig. 30).

(9) Remove the mask from the adjacent outboard lamp and mask the inboard lamp.

(10) Clean the glass of the outboard lamp.

(11) Turn the outboard lamp adjusting screws inwards to their full extent.

(12) With the lamp illuminated in the dipped condition, turn the adjusting screws anti-clockwise as necessary until the required setting is achieved (Refer to Figs. 31, 32 and 33).

(13) Carefully refit the headlamp bezel without disturbing the setting.

(14) Re-check the setting of both the lamps.

(15) Repeat ops. (3) to (14) for the remaining lamps.

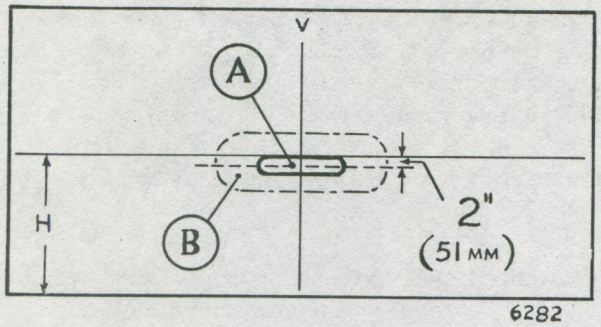

Fig. 30. *Setting diagram for inner lamps—Series III onwards*

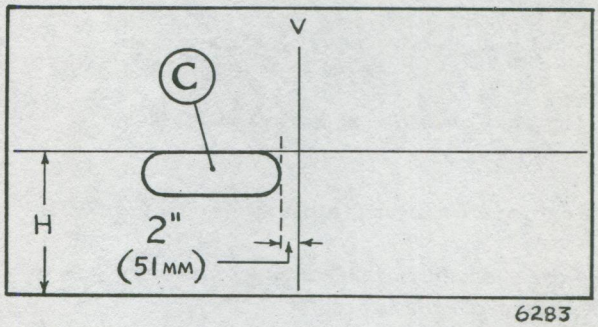

Fig. 31. *Setting diagram for outer lamps—Series III onwards*

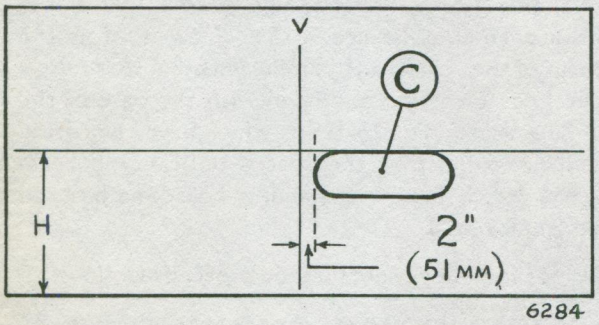

Fig. 32. *Setting diagram for outer lamps—Series III onwards (right-hand rule of the road)*

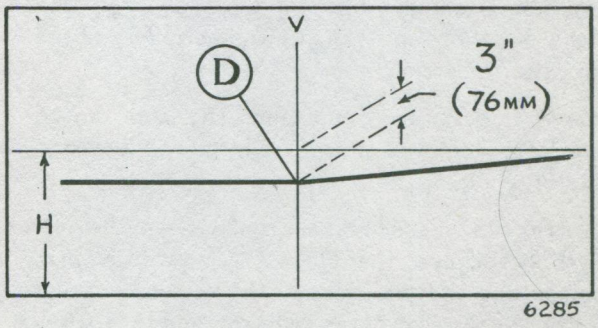

Fig. 33. *Setting diagram for outer lamps—Series III onwards (European type vertical dip)*

SIDE LAMPS AND FRONT FLASHING BULBS (Refer to Fig. 34)

To renew a defective bulb, remove the three screws and detach the glass, ensuring that the rubber seal is not damaged whilst doing so. Renew the defective bulb and refit the lamp glass making absolutely sure that the rubber seal is correctly located; secure the glass with the three screws.

STOP, TAIL AND REAR FLASHING LAMPS (Refer Fig. 35) (Prior to Series V)

The tail lamps incorporate the red combined tail and brake stop lamp and the amber flashing direction indicator lamp in addition to the reflectors.

In the case of the right-hand side lamp the petrol filler cap is concealed by the reflector.

To remove

Bulbs may be renewed without prior dismantling of the lamp as access to the rear of the lamps is available when the lid of the luggage locker is raised.

The red and amber lenses are separate units but in order to renew either lens it is necessary to dismantle the lamp completely and this should be done as follows:—

Disconnect the battery at positive (earth) terminal.

Withdraw the bulbholders from the lamp.

Remove three nuts with washers securing the lamp assembly body.

Remove two screws securing the chromium plate division between the two lenses. All parts of the lamp are now free and may be separated.

Reassemble in the reverse order of dismantling.

To refit

Reassemble the lens to the lamp ensuring that the rubber seal in each lens is correctly located.

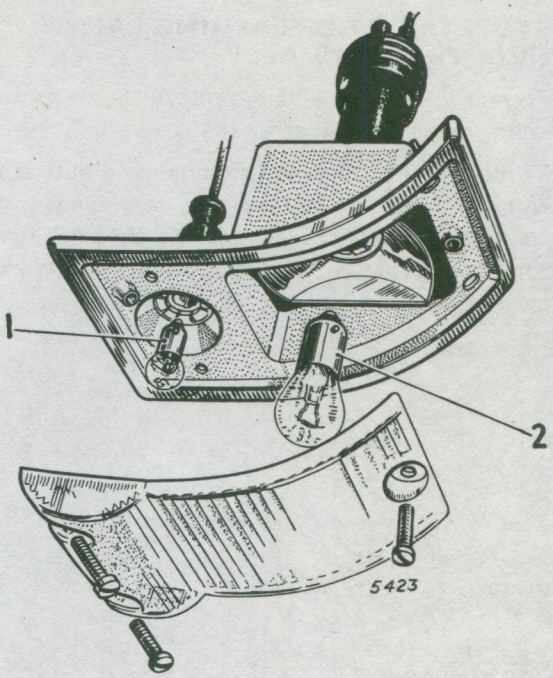

KEY TO FIG. 34
1. SIDE LAMP BULB
2. FLASHER INDICATOR BULB

Fig. 34. *Side lamps and front flasher bulbs*

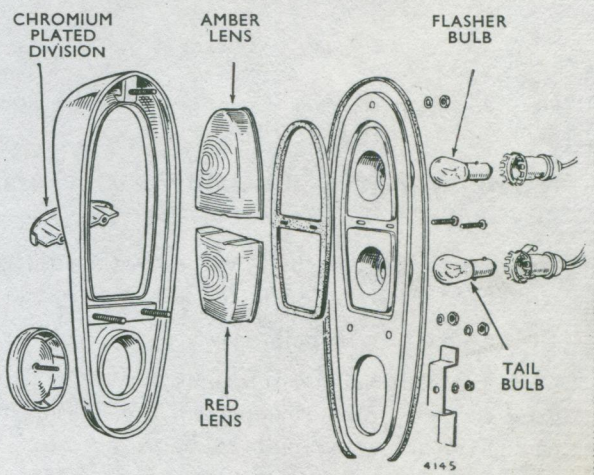

Fig. 33. *Stop, tail and flashing direction indicator lamp details (Prior to Series V)*

Reconnect the leads to the terminals of the base of each bulbholder and refit the lamp.

Reconnect the battery.

STOP, TAIL AND FLASHING LAMPS (Refer Fig. 35A) (Series V)

To renew a defective bulb, remove the two screws which retain the amber or the red lens.

To detach the lamp unit, remove two nuts at the rear of the lamp (collect the plain and spring washers), disconnect the cables at either the snap connector or Lucar connectors and withdraw the lamp unit.

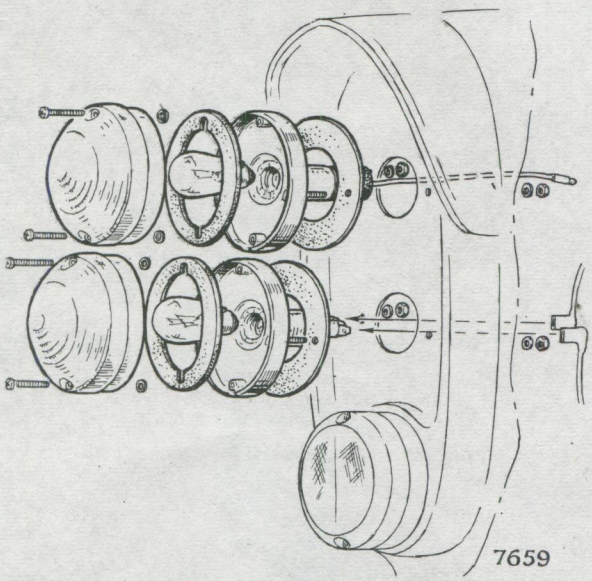

Fig. 35A. *Stop, tail and flashing direction indicator lamp details (Series V)*

NUMBER PLATE ILLUMINATION AND REVERSE LAMP (Refer Fig. 36)

To replace a defective bulb, withdraw the securing screws and remove the rim and lens.

The reversing light bulb may now be renewed.

With the plate illumination bulb, however, withdraw the body of the lamp from the housing far enough to allow the bulb to be withdrawn. It may be necessary to pull the cables for a short way through the lamp housing to allow the body to clear the housing.

STOP LAMP SWITCH UNIT

The stop lamps are automatically controlled by a hydraulically operated switch incorporated in the brake fluid pipe.

The switch is accessible when the bonnet is raised.

In the case of the right-hand side lamp the petrol filler cap is concealed by the reflector.

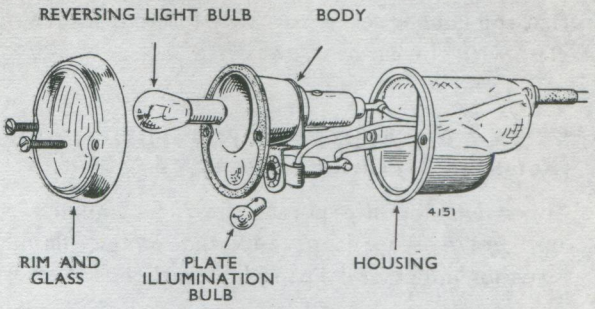

Fig. 36. *Number plate illumination and reverse lamp details*

REVERSING LIGHTS SWITCH

This switch is controlled by a cam which is attached to the change speed lever. It is secured to the dash panel by a bracket and is accessible from underneath the facia.

INTERIOR LAMPS

Series I, II and III models

To renew a defective interior lamp bulb, firmly press one side of the plastic lens inwards so that the retaining lugs of the lens are clear of the slots in the body of the lamp and remove the lens.

After the bulb has been renewed, refit the plastic lens so that the lugs on one side of the lens enter their slots in the body first, then squeeze the lens gently allowing its opposite side to be secured.

Series IV and V models

To renew a defective lamp bulb in either of the two rear interior lamps, press the plastic lens upwards and at the same time rotate it in an anti-clockwise direction and release the lens.

After the bulb has been renewed, refit the lens by pressing it upwards turning clockwise.

To renew the courtesy lamp bulb at the rear of the rear view mirror, insert the thumb and forefinger in the recess provided in the back of the mirror and release the bulb which is of the festoon type.

DIRECTION INDICATOR SIGNALS AND HEADLAMP FLASHER

Direction Indicators

The correct operation of the direction signal requires that the bright 21-watt filament in the side (parking) lamp bulbs and the rear flasher bulbs flash intermittently whether or not the headlamps, parking lamps, tail lamps or stop lamps are "on".

The efficiency of the flasher unit may be readily checked by plugging in a known substitute.

The flasher unit is plugged into a socket secured on to the rear of the panel on which the control box is mounted.

Access to the unit is gained by removing two screws securing the panel to the wing valance and turning the panel far enough for the flasher unit to be removed and refitted.

In some cases, however, the flasher unit is plugged into a socket located under the facia on the left-hand side of the car.

The inoperative side (parking) or rear flasher bulbs should be checked for a burned out filament.

Where it is found that neither lamp has a burned out filament the wiring between the defective lamp and indicator switch must be checked.

If the direction signal is entirely inoperative, check the fuse (A.4 on fuse box) flasher unit and circuit from the fuse box up through the steering column switch in the order named.

No servicing of the flasher is required, and where this unit breaks down in service it must be renewed.

It is important to note that the twin filament bulbs used in the side and tail lamps (Lucas 380 12v. 21/6w.) are the same type. These bulbs have offset pins and cannot be fitted incorrectly.

Operation of Flasher Unit

The pilot lamp on the facia panel will not flash unless sufficient current to light the filaments in side (parking) lamp and rear flasher lamp is passing through the windings of the electro magnet to attract the secondary armature and close the pilot contacts. The flashing pilot lamp, therefore, gives the driver a clear indication that the direction signals are working correctly—i.e. 60 to 120 flashes per minute.

Headlamp flasher switch

The direction indicator switch also incorporates the switch for flashing the headlamps, this is achieved by moving the lever stalk towards the steering wheel and in so doing an insulated spring-loaded plunger, operated by the inner end of the lever, is depressed to make switch contact so that the headlamps illuminate and will remain so until upward pressure on the lever is released. When the lever is released the switch will return to the OFF position under the influence of its spring and the headlamps will extinguish.

Headlamp flashing can be accomplished irrespective of the lever position, i.e., whilst using either direction indicator.

CAUTION: In certain countries where the headlamp flasher operates on the main beam it is inadvisable to use the flasher continuously when the two outer headlamps are already in the dipped condition as the excess heat generated by both filaments will greatly lessen the life of the lamp units or bulbs whichever is appropriate.

When the headlamp flasher system is functioning correctly, each application of the switch lever in the upward direction will illuminate the two outer headlamps.

Should any one headlamp fail to illuminate a check is to be made to ensure that the connections to the headlamp are secure, if on inspection the connections are found to be satisfactory the suspect lamp unit is to be changed for a unit which is known to be serviceable. (This does not apply to vehicles in certain export territories where the outer lamps are fitted with pre-focus bulbs and are renewed in in the manner described on page 30).

In the event of the headlamps failing to illuminate when the switch is operated, the fuse (4 on fuse box) and the circuit from the fuse box to the headlamp flasher switch is to be checked. If after test the switch is found to be defective, it must be renewed as the switch is irreparable.

HORNS

LUCAS WINDTONE HORNS

(Refer Fig. 37) Model WT 618:

The horns operate on the principle of a resonating air column vibrated by means of a diaphragm which is actuated electro-magnetically by a self-interruptory circuit. The tonal quality of each horn is adjusted to give its best performance before leaving the manufacturers, consequently, it should require no further attention until it has given a long period of service. However, in the event of a single or both horns failing to sound satisfactorily, the cause can be diagnosed and rectified as follows:—

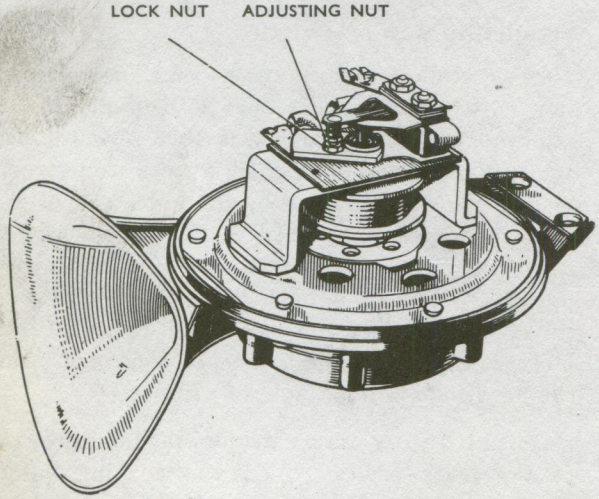

Fig. 37. *Horn with cover removed*

WARNING: Do not dismantle the horn(s) beyond the instructions given in the following paragraphs.

Maintenance

If the horns suddenly fail to sound after operating, normally the cause is unlikely to be in the horns themselves. First ensure that the cause is not due to such defects as a loose or broken connection in the horn wiring circuit. A short circuit in the horn wiring will cause the fuse to blow. In this event, examine the wiring to locate the fault and rectify accordingly before renewing the fuse. Failure of the horns to perform correctly can be attributed to either a discharged battery, faulty or loose connections or loose mounting bolts; check and remedy as found necessary. If on inspection these points are found to be in order, it is possible that the horns require adjustment.

Adjustment

Disconnect one horn whilst carrying out adjustment on the other, at the same time ensuring that the current supply cable does not come into contact with any part of the vehicle metalwork.

Adjustment does not in any way alter the pitch of the note, but merely takes up wear of the moving parts. During adjustment, short out the fuse, otherwise it is liable to blow.

If a horn fails to sound after making an adjustment, release the horn ring immediately. If a horn is removed from the vehicle for the purpose of carrying out adjustment, it is to be held firmly in a vice by the mounting bracket so that the best results in sound are obtained.

Method (*i*)—Remove the cover securing screw, take off the domed cover and remove the cover retaining strap and rotate the adjusting nut in a clockwise direction until the horn just fails to sound, then rotate it in the reverse direction for one half turn and secure it in this set position with the locknut; replace the retaining strap and cover.

Method (*ii*)—If a first grade 0—20 moving coil ammeter is available, connect it in series with the horn. A horn in correct adjustment will pass 7·5 to 8·5 amperes.

Note: Certain models have the designation WT 618 U; these are uprated for greater output and their current consumption is 13·5 to 15·5 amperes. In order to recognise the WT 618 U model horn, a printed label bearing a number is affixed either in the horn flare or on one end of the bridge which mounts the contact and coil assembly. These are Nos. 69087, 69090, 69127, 69128, 69131 and 69132.

Remove the cover securing screw, take off the domed cover and remove the cover retaining strap. Slacken the locknut on the fixed contact stem and rotate the adjusting nut a few degrees at a time in a clockwise direction to reduce the current or in the reverse direction to increase it; this adjustment is quite critical.

Before testing the horn, retighten the locknut and ensure to do this after each trial adjustment, repeating the exact process until the best performance is achieved within the stated current range.

When the horns are operating satisfactorily, replace the cover retaining strap, the domed cover and secure the whole with the screw.

WINDSCREEN WIPER

MODELS DR3 AND 6WA TWO-SPEED

General Description (both models)

The two-speed wiper is controlled by a three-positional rotary switch marked "H", "N" and "P", giving a high and normal speed, and a park position.

The dual arms of the windscreen wiper are driven by a cable rack from a separately mounted motor.

The rotary motion of the motor armature is converted to the reciprocating motion of the cable rack by means of a single stage reduction gear, connecting rod and crosshead in the gearbox.

The cable rack comprises an inner steel core carrying a wire helix, the whole being run within rigid connecting tubes between motor and wheelboxes. At the wheelboxes the rack engages with toothed wheels in the wiper arm spindles. The method of arm-to-spindle fixing consists of an internally serrated headpiece and a retaining clip mating with a serrated driving drum.

A current operated thermostatic circuit breaker mounted within the motor gives protection against excessive overloading. This device will operate if, for example, the blades are obstructed by ice or packed snow on the windscreen. Normal working will be resumed when the motor has cooled, and the obstruction has been removed.

Control of Speeds (both models)

The wiper motor can be operated at either of two speeds. In addition to its normal speed of 45—50 c.p.m., a higher speed of 60—70 c.p.m. is available for use in conditions of very heavy rain or light snow. This higher operating speed is achieved by switching into circuit a resistor connected in series with the field winding of the motor.

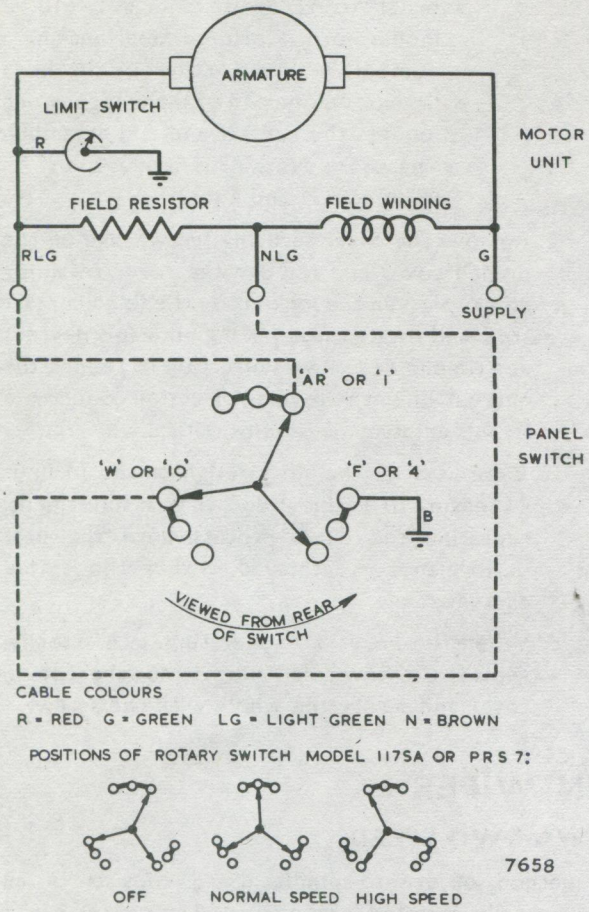

Fig. 38. *Internal connections of two-speed wiper (6WA) and switch*

Reference to Fig. 38 shows the internal connections of the motor and operating switch. With the switch in the "OFF" position, the motor is isolated from earth and is, therefore, made inoperative. Turning the switch to the "NORMAL" speed position completes the armature and field circuit and, with the resistor being short circuited, the motor operates at the lower speed. Moving the switch into the "HIGH" speed position causes the resistor to be switched into circuit, thereby increasing the speed of the motor.

Operation of Self-Parking Mechanism (DR3 model)

When the control switch is turned to the park position the direction of rotation of the armature is reversed. This causes a pivoted coupling between the crank-pin and the connecting rod to rotate 180° and thereby displace the transverse of the cross-head. A striker carried by the crosshead then opens the self-parking switch, which cuts off the current supply to the motor.

The blades come to rest in the correct parking position irrespective of their positions at the moment of turning the control switch to the park position.

Combined Windscreen Wiper Switch and Washer Control (Series V)

Integral with the switch on this series of models is a windscreen washer control, the control knob for the windscreen wipers also actuating, when depressed, the switch to set the windscreen washer apparatus in motion.

Both switch assemblies are embodied together, therefore, in the event of one unit becoming defective in service, the complete assembly will have to be renewed. Before detaching Lucar connectors from the rear of the switch, always disconnect the positive (earth) terminal from the battery. The complete assembly is retained to the facia panel by a chromium plated ring-nut which is situated at the front of the control knob; to detach the control knob, first depress the spring-loaded catch which extends from the control shaft into the shank of the knob.

Do not attempt further disassembly as no provision is made for the repair of defective units.

Maintenance (both models)

Efficient wiping is dependent upon having a clean windscreen and wiper blades in good condition.

Use methylated spirits (denatured alcohol) to remove oil, tar spots and other stains from the windscreen. Silicone and wax-based polishes should not be used for this purpose.

Worn or perished wiper blades are easily removed for replacement by new ones.

When necessary, the wipers should be re-set as follows. Reposition the windscreen wiper arms on their serrated spindles so that the arms and blades point to the jointing pieces in the windscreen top chrome moulding when the arms are at the extreme

outer ends of their arcs of movement. The method of repositioning the wiper arms on their serrated spindles is given on page 40. The self-parking switch adjustment on DR3 motors should then be set so that the blades come to rest in the correct position at the bottom of the screen when the self-parking switch is operated.

The self-parking switch adjustment is made by turning the knurled nut located near the cable rack outlet. Turn the nut only one or two serrations at a time and test the effect of each setting before proceeding. To test for correct positioning of the wipers when parked, lift the wiper arm away from the screen and allow it to drop back into place of its own accord. If the wipers are correctly adjusted, the wiper arm will fall back to the bottom edge of the screen. Any tendency for the wiper arm to force its way over the windscreen beading indicates incorrect adjustment.

On 6WA motors the self-parking switch should not be adjusted. Wiper blade sweep may be corrected only by repositioning the arms on their spindles.

It is essential that the above adjustments be carried out with a wet screen otherwise satisfactory adjustments will not be obtained.

Wiper Motor and Gearbox (Refer to Fig. 39)

To remove and refit—both models

Disconnect the battery. Remove wiper arms.

The wiper motor is secured to a platform in the recess in the left-hand side wing. It is partially concealed behind the panel on which the control box, fuse unit, horn relay and flasher unit are mounted. Remove three screws securing the panel to which the control box, etc. are secured and allow the complete assembly to hang down.

The wiper motor and gearbox are mounted on three pillars cast as part of the gearbox. The pillars are rubber mounted. Release the large nut securing the rigid outer tubing to the motor. Remove three nuts with washers and lift the motor complete with inner cable into the engine compartment far enough to permit the harness and motor to be separated at the snap connectors.

Refit in reverse order of the above.

Wiper Wheel Boxes—To remove and refit

Disconnect fresh air duct at ventilator box. Remove six screws securing upper half of ventilator box and remove box.

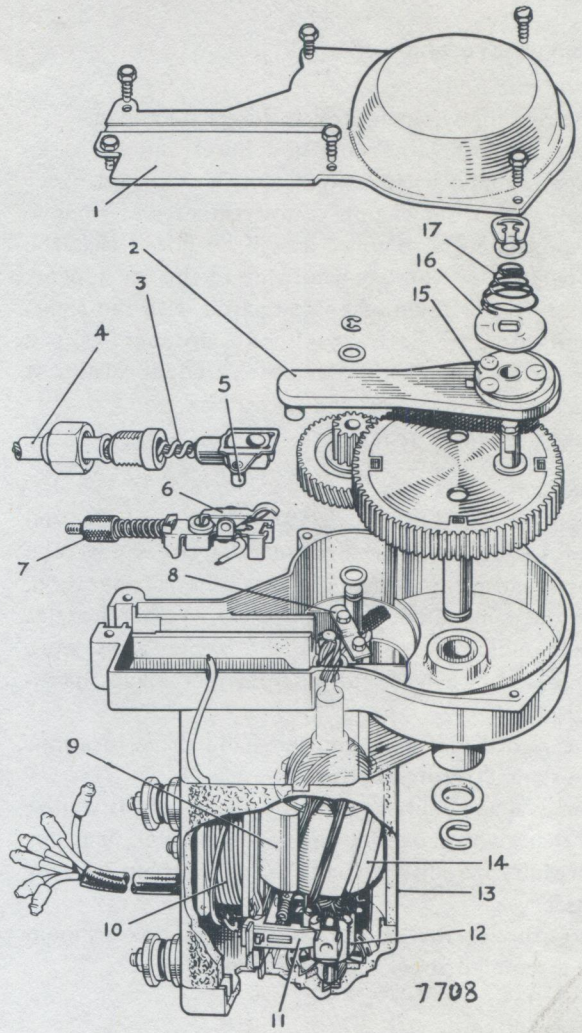

Fig. 39. *Model DR3 wiper motor and gearbox*

1. GEARBOX COVER
2. CONNECTING ROD
3. CABLE RACK
4. PROTECTIVE TUBING
5. SWITCH STRIKER PIN
6. CROSS-HEAD-ACTUATED LIMIT SWITCH
7. PARKING ADJUSTER
8. ARMATURE END-PLAY STOP PLATE
9. POLE PIECE
10. FIELD COIL
11. BRUSH GEAR
12. COMMUTATOR
13. YOKE
14. ARMATURE
15. PIVOTED COUPLING (ECCENTRIC)
16. FRICTION PLATE
17. CONICAL SPRING

In the case where a heater is fitted the ventilator controls will also require disconnecting.
The wiper wheel boxes are each secured by the large nut on the wiper spindle box.

To remove and refit

Early cars
Remove the wiper motor as described above.
Remove both large nuts and hoses and push the wiper spindle back complete with the rigid outer tubing into the engine compartment and remove the complete assembly. It will be noted that the wiper box on the left-hand side of the car appears to be upside down when compared with the right-hand side box. Both wheel boxes are identical and the "clap hands" motion of the wiper blades is achieved by inverting one wheel box.
Refit in reverse order.

Later cars
From Chassis No. A.8902597 (U.S.A. and Canada) and A.8902637 (all other countries), the windscreen wiper mechanism changed to asymmetric operation. At the same time the windscreen washer nozzles were mounted separately, the wiper arms were increased in length and longer wiper blades introduced.
The right-hand drive and left-hand drive locations are symmetrically opposite.
Removal and refitting of the wheel boxes is similar to that given above for the earlier model. It is not necessary to disconnect the windscreen washer hoses.
To ensure correct operation the wheel boxes should be assembled above the cable and tube.

Fault Diagnosis

Poor performance can be electrical or mechanical in origin and not necessarily due to a faulty motor. e.g.
Low voltage at the motor due to poor connections or to a discharged battery.
Cable rack binding in protective tubing.
Excessive loading on the wiper blades.
Wheelboxes loose, out of alignment or spindles binding in the bearing housing.

Testing:
Unless the origin of the fault is apparent, proceed as follows to determine the cause of failure.

Measuring Supply Voltage:
Using a first grade moving coil voltmeter, measure the voltage between the motor supply terminal (to which the green cable is connected) and a good earthing point. This should be 11·5 volts with the wiper working normally. If the reading is low, check the battery, switch (by substitution), cabling and connections.

Measuring Light Running Current:
If the normal running terminal voltage is correct, disconnect the cable rack at the wiper gearbox and measure the light running current with a first grade moving coil ammeter connected in the supply cable.

As this involves removing the gearbox cover, the opportunity can be taken to observe the speed of operation by counting the revolutions per minute of the final gear.

The light running current must not exceed 3·4 amperes at normal Speed (45—50 c.p.m.). If it does, fit a new windscreen wiper motor.

Check Cable Rack and Tubing:
The maximum permissible force to move the cable rack in its protective tubing is 6 pounds with the wiper arms, blades and motor disconnected. The measurement can be made by hooking a spring balance in the hole in the cross-head (into which a pin on the connecting rod is normally located) and withdrawing the rack with the balance.

Binding of the rack can be due to kinked or flattened tubing or to faulty installation. Minor faults can be cleared with a suitable test mandrel sold specifically for checking wiper installations. Badly kinked or flattened tubing must be renewed. Any bends of less than 9 in. (22·8 cm.) radius must be re-formed.

At the wheelboxes the flared ends of the intermediate tubing should be located in the inner wide slots of the wheelbox clamp plates but the end of the main tubing should be located in the outer narrow slot.

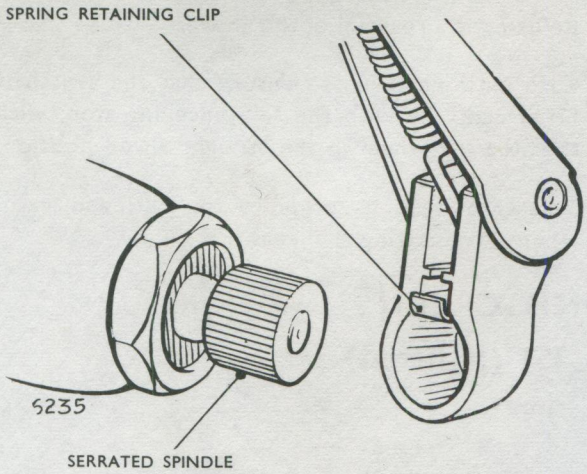

Fig. 40. *Wiper blade adjustment*

The cable rack should be well lubricated with grease.

Checking Wheelboxes:

Check the wheelboxes for misalignment or looseness and rectify as required.

Renew seized wheelboxes.

To renew or adjust Wiper Arms (Refer to Fig. 40)

Lift the spring retaining clip on the wiper arm and slide the arm from the spindle. The spindle is serrated giving adjustment steps of 5° for the arm.

Fit the new arm on the spindle and check the sweep when the wiper is operated. To adjust the sweep the wiper arm must be removed from the spindle and repositioned on the appropriate serrations.

HORN RING & DIRECTION INDICATOR SWITCH

Horn Ring Assembly—To remove

Remove the three screws which secure the horn ring assembly in the hub of the steering wheel.

These screws are equally spaced around the hub and located in line with the lower edge of the spokes of the steering wheel. The complete assembly is now free to be withdrawn from the hub of the wheel.

It will be noted that a short cable which supplies the current to the ring has a snap connector end, and is plugged into the connector on the steering wheel.

To refit, reverse the above instructions.

Care should be taken to ensure that the plug of the snap connector is fully home before the horn ring assembly is replaced and secured.

Horn Ring Assembly—To dismantle

Remove horn ring assembly from steering column (see above).

Turn the assembly over and remove three 4 B.A. self-locking nuts with washers securing the lower horn contact plate and springs.

Take off contact plate and springs.

Remove three screws securing the hub mouldings to the horn ring.

To reassemble, reverse the above instructions. It is important however, to ensure that the air gap between the contacts is maintained at 0·015 in. (0·38 mm.).

Adjustment of the gap is effected by means of the three 4 B.A. self-locking nuts.

Direction Indicator Switch—To remove

No servicing of the direction indicator switch is required and should the unit break down in service a replacement unit must be fitted.

Remove three screws securing steering column cover.

Disconnect the battery at the positive (earth) terminal.

Disconnect the leads to the switch at the snap connectors located under the facia and in line with the steering column.

Remove two screws with washers securing the switch assembly to the steering column.

Refitting is a reversal of the above.

Care must be taken to ensure that the switch is fitted centrally with the self-cancelling stop, with the steering wheel in the straight ahead position.

Reference must be made to the wiring diagram when reconnecting the leads.

ELECTRIC WINDSCREEN WASHER—Type 2SJ (if fitted)

How the Pump Unit works

A small electric motor is mounted above the water container moulded cover. The motor drives a small centrifugal pump positioned inside an auxiliary reservoir at the base of the water container.

The auxiliary reservoir is primed via a gauze filter and inlet opening in the base of the pump. Each operation of the unit discharges the contents through the jets.

When the pump motor is revolving an upward thrust is developed, this upward movement is used (*a*) to close contacts inside the motor housing and (*b*) to close the water inlet to the auxiliary reservoir.

After starting the motor, by pressing and releasing the push button, the movement of the shaft closes the contacts and keeps the motor running until the auxiliary reservoir is empty. The thrust being no longer present, the shaft returns to the lower position; opening the contacts, switching off the motor and re-opening the auxiliary reservoir water inlet. The auxiliary reservoir will now refill for the next operation.

Operation

Fill the container up to the bottom of the neck with CLEAN SOFT water. See that the moulded cover is screwed on to the container. Allow a short period for the auxiliary reservoir to fill up.

Turn the nozzles until the outlet holes point to the windscreen.

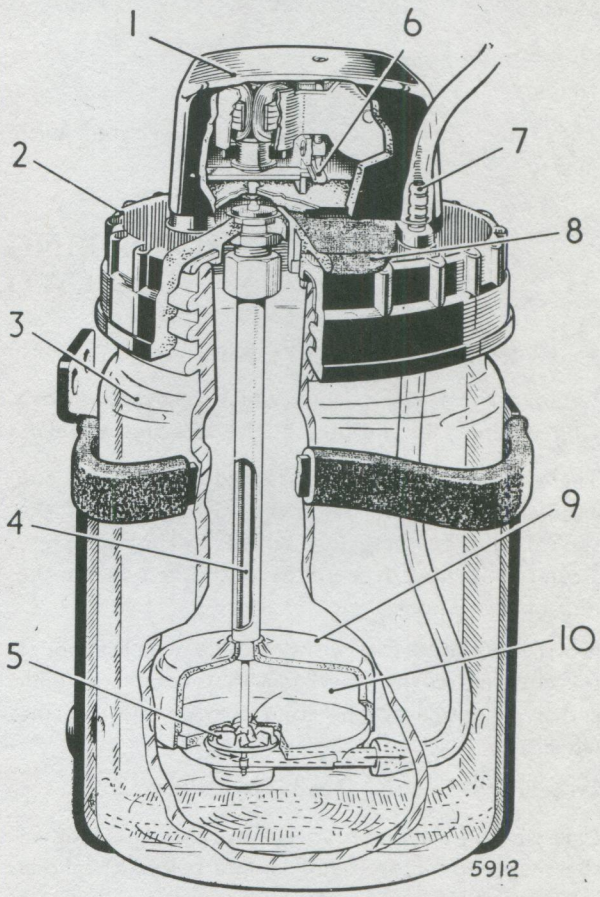

Fig. 41. *Cutaway view of Lucas Screenjet*

KEY TO FIG. 41

1. MOTOR UNIT
2. MOULDED COVER
3. GLASS CONTAINER
4. PUMP ROTOR SPINDLE
5. PUMP ROTOR
6. CONTACTS
7. BRASS CONNECTING TUBE
8. FILLER CAP
9. PUMP ASSEMBLY
10. AUXILIARY RESERVOIR

Switch on the ignition. Then press and release the operating button and observe the direction of the jets. Adjust the nozzle until the jets strike the windscreen in the area swept by the wiper blades by turning the knurling in the required direction. It may be necessary to readjust the nozzle after a trial on the road due to the jets of water being deflected by the air-stream over the bonnet.

The unit should continue to run for about seven seconds after the operating button has been pressed, and will then switch itself off. A small time lapse, while the auxiliary reservoir refills, must be allowed before operating a second time, if the full amount of water is required to be delivered.

If the ignition should be switched off whilst the pump is operating, the unit will stop and will not restart on switching the ignition on again until the operating button is again pressed.

Cleaning and adjusting the jets

In the event of partial or total blockage of either one or both jets, the unit will run for a longer period than normal.

To clear the jet, grip the knurled portion and withdraw the jet. Normally the jet will clear by blowing, if however, the obstruction is stubborn a pin or wire should be **carefully** used to clear the jet.

After refitting the jet, test and adjust the jet by turning the knurled portion in the required direction.

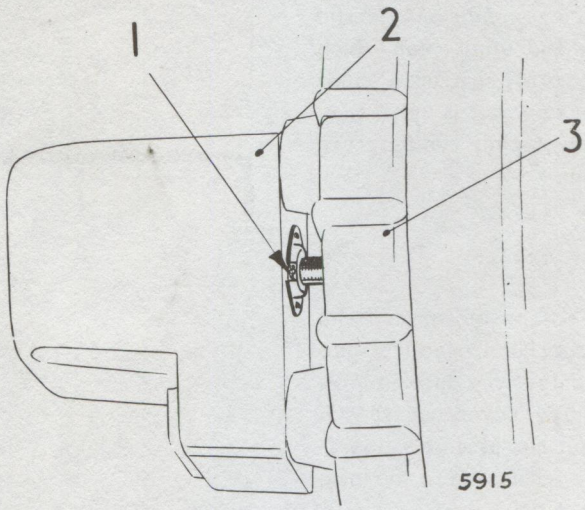

Fig. 42. *Lubrication of motor spindle*

KEY TO FIG. 42
1. OIL HERE (2 DROPS ONLY)
2. MOTOR HOUSING
3. MOULDED COVER

Lubrication

In normal service no attention is required; if, after lengthy service, the period of operation is extended due to a sluggish motor, remove the moulded cover and hold in the position shown in Fig. 42. Apply not more than two drops of thin machine oil to the felt pad. Do not over-lubricate,

excess oil may find its way into the water container and result in a smeared windscreen.

Frost Precautions

When cold conditions are anticipated, either empty the container or add denatured alcohol (methylated spirit) as follows:—

The underside of the rubber filler cap (8) (Fig. 41) forms a measure. Add two measures of denatured alcohol per container of water, USE NO OTHER ADDITIVES WHATSOEVER.

It is not considered advisable to operate the windscreen washers under freezing conditions as the spray will probably freeze on the windscreen which will result in an opaque or possibly shattered windscreen, particularly as the jet of water is more than likely to be at a considerably higher temperature than the surface of the screen.

Warning

The assembly of the pump to the motor and the moulded cover calls for a special procedure. No attempt should be made to remove the union nut on the underside of the moulded cover. A special gauge is required to carry out the assembly operation. In this connection you are referred to the local Lucas agent.

KEY TO FIG. 42

A. BLACK CABLE—TO EARTH
B. GREEN AND BLACK CABLE TO SWITCH
C. GREEN CABLE TO TERMINAL A4 ON FUSE UNIT

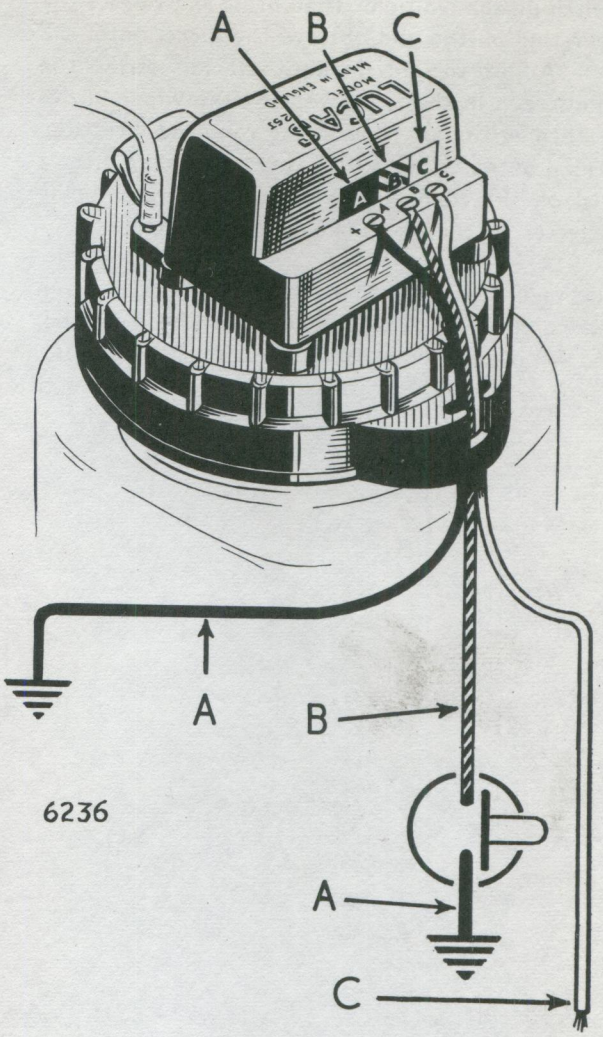

Fig. 43. *Electrical connections of Lucas Screenjet*

ALTERNATORS

MODELS 10AC AND 11AC

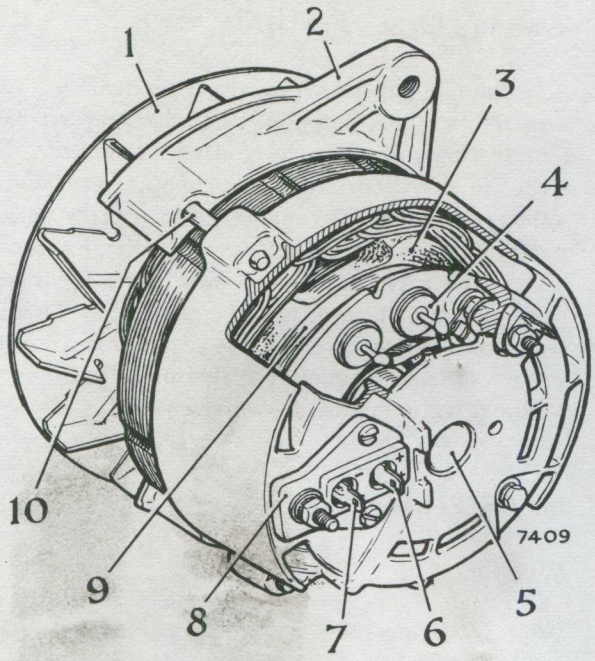

Fig. 44. *Cut-away view of alternator showing cooling fan and diodes*

KEY TO FIG. 44

1. COOLING FAN
2. DRIVE-END BRACKET
3. ROTOR
4. DIODES (6)
5. NEEDLE-ROLLER BEARING
6. POSITIVE FIELD TERMINAL
7. NEGATIVE FIELD TERMINAL
8. BRUSH BOX MOULDING
9. SLIP-RING ASSEMBLY
10. "THROUGH" FIXING BOLTS (3)

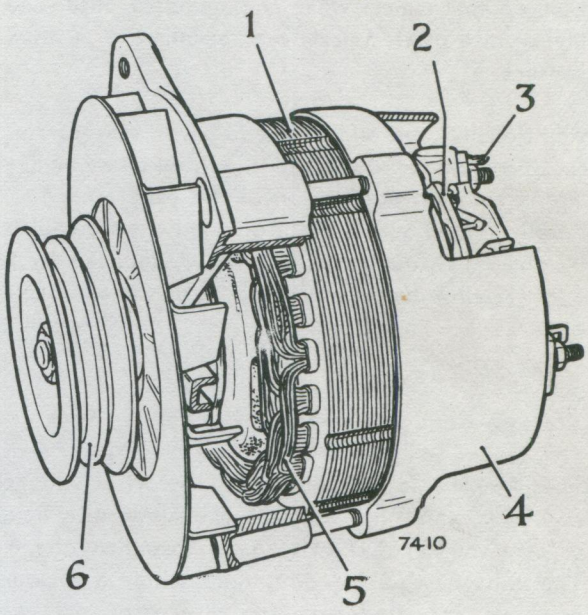

Fig. 45. *Cut-away view of alternator showing stator winding and drive pulley*

KEY TO FIG. 45

1. STATOR LAMINATIONS
2. ALUMINIUM HEAT SINK
3. WARNING LIGHT TERMINAL "AL"
4. SLIP-RING END-COVER
5. STATOR WINDINGS
6. DRIVE PULLEY ("W" SECTION)

DESCRIPTION (Refer to Figs. 44 and 45)

Both alternator models, the 10AC and 11AC are, in most respects, of identical design and construction; each machine is of the same diameter, whilst the length of the Model 10AC is slightly less than the higher output Model 11AC. The stator comprises a 24-slot 3-phase star-connected output winding on a ring-shaped lamination pack, housed between the slip-ring end-cover and the drive-end bracket. The rotor is of 8-pole construction and carries a slip-ring fed field winding. It is supported by a ball-bearing in the drive-end bracket and a needle-roller bearing in the slip-ring end-cover.

The brushgear for the field system is mounted on the slip-ring end-cover. Two carbon brushes, one positive and the other negative, bear against a pair of concentric brass slip-rings carried on a moulded disc attached to the end of the rotor. The positive brush is always associated with the inner slip-ring, since the lower linear speed of this ring results in reduced mechanical wear and helps to offset the higher rate of electrical wear peculiar to positive brushes.

Additionally, the slip-ring end cover also carries six silicon diodes connected in a three-phase bridge circuit to give rectification of the generated A.C. output. The diodes and stator windings are cooled by airflow through the alternator, induced by a 6 in. (15 cm.) diameter ventilating fan at the drive end.

Voltage Regulator—4TR

The alternator is matched to a transistorised voltage regulator, this unit controls the alternator field current and hence the alternator terminal voltage. The voltage regulator does not include a cut-out relay, as the diodes in the alternator prevent reverse currents from flowing through the stator when the machine is stationary, or is generating less than the battery voltage.

No separate current-limiting device is incorporated; the inherent self-regulating properties of the alternator effectively limit the output current to a safe value. Where the voltage regulator becomes faulty in service, it must be renewed as a complete unit. The method of adjusting is described in later paragraphs under the heading "Alternator Control".

Field Isolating Relay—6RA

The voltage regulator and the alternator field winding are isolated from the battery when the engine is stationary by the normally-open contacts of a field isolating relay whose operating coil is fed from a standard ignition switch. The contacts are connected directly to the battery since the alternator output must respond to changes in battery voltage and not to conditions occurring elsewhere in the system.

Warning Light Unit—3AW

A warning light provides visual evidence of the satisfactory functioning of the charging system; illuminating only when the ignition is switched 'ON' with the alternator at rest or running very slowly. When, at a fairly low engine speed (usually below normal idling r.p.m.) the generated voltage exceeds that of the battery, the light will be extinguished. The warning light unit is extremely robust in construction and is not likely to be troublesome during service. It is a completely sealed unit and when it becomes faulty it must be renewed.

MAINTENANCE

Cleaning

Wipe away any dirt or oil which has collected around the slip-ring end-cover ventilating apertures.

Belt Adjustment

Refer to Section B of this publication.

Lubrication

The ball-bearing and needle-roller bearing are packed with grease during assembly and require no periodic attention.

Terminal Connections

Make sure that all terminal connections are tight, but do not overtighten.

SERVICING REQUIREMENTS

As indicated earlier in this Section, vehicles in service will have either a positive or a negative earthed electrical system. It follows therefore that persons servicing alternator equipment will need to take care to differentiate between the two polarities. It is strongly emphasised that because of the sensitive nature of the electronics in the system, three basic requirements must be fulfilled before any attempt is made to service alternator equipment. These requirements are as follows:—

1. A methodical approach;

2. Full knowledge of the charging circuit;

3. An understanding of the necessary precautions.

General guidance on fitting procedure and the means of distinguishing the equipment is included in the following paragraphs together with a list of servicing precautions which must be strictly observed. Reference should be made to the alternator diagnosis chart included later in this Section; this should be used with the accompanying wiring diagrams which show the associated circuit connections and units employed in the system.

FITTING PRECAUTIONS

Alternators

These are polarity conscious to suit one system only, and on no account must any attempt be made to repolarize. Machines with the main output terminal marked "—ve" are for POSITIVE earth systems, those marked "+ve" are for NEGATIVE earth. A black-coloured strip at the main output terminal denotes a positive earthed machine, and a red strip denotes a negative earthed machine. Some early production machines for positive earth have a yellow-coloured strip.

Control Unit 3AW

Due to the external similarity of the alternator Warning Lamp Control 3AW to the Flasher Unit FL5, a distinctive green label is applied to the aluminium case of model 3AW. Care must be exercised to avoid connecting either of these units into a circuit designed for the other. When renewing a defective unit, ensure that it is replaced by another of the correct part number. It is important first to measure the voltage between alternator terminal "AL" and earth before fitting. The voltage must not exceed 7·5 with the alternator running at 3,000 r.p.m. (1,400 engine r.p.m.) and the side lamps switched "ON" otherwise the new unit may become damaged. Excessive voltage at this point denotes a faulty diode in the alternator or an intermittent or open circuit in the alternator-to-battery circuit.

Field Isolating Relay 6RA

The 6RA Relay is similar in appearance to an overdrive relay but may not always be the same in construction. Therefore it is imperative that a relay of the correct part number is fitted into the system when a replacement is necessary.

Control Unit 4TR

The Control Unit is suitable for either positive or negative earthed systems provided it is connected to suit the vehicle's earth polarity. On negative earthed systems the 4TR negative terminal will be earthed, and on positive earthed systems the 4TR positive terminal will be earthed. Extreme care must be exercised to ensure that the cables to 4TR negative and positive terminals are not reversed, otherwise the unit will be destroyed.

SERVICING PRECAUTIONS

The important point to remember is that the units in the system mus connected correctly in a FIRST attempt. "Trial and error" methods will not do if serious trouble is to be avoided.

1. The battery must NEVER be disconnected while the alternator is running. Failure to observe this ruling will cause the 4TR Control Unit to be irreparably damaged.

2. On no account should any attempt be made to polarise an alternator. To do so may result in it being irreparably damaged. Remember too, that circuit connections vary according to earth polarity.

3. Always disconnect the battery earth lead before commencing to fit a replacement alternator, and check that the battery earth polarity is suited to the alternator being fitted.

4. When a battery is being fitted, ensure that it is connected to suit the vehicle's earth polarity. Reversed battery connections will damage the diode rectifiers in the alternator. Use a voltmeter to check the battery polarity before installing, as it may be reverse charged.

5. Never earth the Brown/Yellow cable if disconnected at "AL" on the Warning Lamp Control 3AW, otherwise a damaged alternator, diode and wiring will result.

6. Never earth the Brown/Green cable if disconnected at alternator. If this cable is earthed with the ignition "ON", the Control Box 4TR, Relay 6RA, and their associated wiring may become damaged.

7. Always disconnect the battery earth lead before removing the alternator output cable. Earthing the alternator output cable or terminal will damage the alternator or circuit. This is true even when the system is not in operation since no circuit breaker is used and the battery is applied to the main output cable at all times.

8. The alternator should NEVER be run on open-circuit with the field winding energised or the rectifier diodes are liable to become damaged.

9. It is advisable to disconnect the cables from the vehicle battery before connecting a battery charger except for "built-in" chargers which must be connected to suit the vehicle's earth polarity.

10. Do not use a high voltage source to test diodes; a 12 volt D.C. supply will suffice.

11. Never use an ohmmeter of the type incorporating a hand-driven generator for checking the diode rectifiers or transistors.

Electric Arc Welding Precautions

If electric arc welding has to be done on the vehicle the battery and alternator cables must first be disconnected. A vehicle must never be started with an electric welding plant attached. Your Body Repair Specialists should be advised of these precautions.

Boost-Charging Precautions

If a battery is to be boost-charged from another battery, the booster battery must always be connected in parallel, i.e. NEGATIVE TO NEGATIVE and POSITIVE TO POSITIVE.

TESTING THE ALTERNATOR IN POSITION

In the event of a fault developing in the charging circuit, adopt the following procedure and observe the precautions outlined in the previous paragraphs:—

1. Inspect the driving belt for wear and tension.

2. Disconnect the battery earth cable.

3. If an ammeter is fitted to the vehicle proceed to paragraph 4. If not, disconnect the cable from the alternator main output terminal and connect a good quality moving-coil ammeter, capable of reading up to at least 75 amperes, between the main output terminal and the disconnected cable.

4. Connect the alternator field winding across the battery terminals, by-passing the voltage regulator but leaving the field isolating device contacts in circuit. To do this, disconnect the cables from the voltage regulator 4TR at terminals "F" and "–" and join these cable ends externally.

5. Reconnect the battery earth lead. Switch "ON" the ignition, start the engine and slowly open the throttle until the alternator speed is approximately 4,000 r.p.m. (1,800 engine r.p.m.). At this speed the reading on the ammeter should be 25 amperes or more for the 10AC alternator and 35 amperes or more for the 11AC alternator, with both machines at ambient temperature. A low current reading will indicate either a faulty alternator or poor circuit wiring connections.

   If, after checking the latter (especially the earth connections), a low reading persists upon repeating the test, proceed to paragraph 6. If, however, a zero reading results, switch "ON" the ignition and check that battery voltage is being applied to the rotor windings by connecting a voltmeter between the two cable ends normally attached to the alternator field terminals. No reading in this test indicates a fault in the field isolating relay 6RA or the wiring associated with this circuit. Check and rectify as necessary.

6. If a low output has resulted from the test described in paragraph 5 and the external circuit and field isolating arrangement are both in order, measure the resistance of the rotor coil (field) by means of an ohmmeter connected between the field terminal blades with the external wiring disconnected.

   The resistance must be approximately 3·47 ohms for the 10AC model or 3·77 ohms for the 11AC model. If an ohmmeter is not available, connect a 12-volt D.C. supply between the field terminals with an ammeter in series. The ammeter reading should be approximately 3·5 amperes for the 10AC model or 3·2 amperes for the 11AC model. A zero reading on the ammeter, or an "infinity" ohmmeter reading, indicates an open circuit in the field system, i.e. brushgear, slip-rings or winding.

   Conversely, if the current reading is considerably above or the ohmmeter reading considerably below the values stated, it is an indication of a short-circuit in the rotor winding, and the rotor/slip-ring assembly must be renewed.

Conclusion of Test:

The alternator test is made to determine the condition of the alternator.

1. The alternator is satisfactory if a reading approximating its rated output is obtained on the ammeter at ambient temperature.

2. A low reading at 4,000 r.p.m. (1,800 engine r.p.m.) indicates a faulty alternator or poor circuit wiring connections.

3. A zero reading can be the result of a faulty field isolating relay, or its associated circuit. (If the relay fails to close, it will prevent the rotor field circuit from being completed across contacts "C1" and "C2", in which case, check the relay circuit.)

FIELD ISOLATING RELAY TEST

The 6RA relay is used for de-energising the alternator field winding when the engine is stopped, by disconnecting the supply from the rotor field, through the action of turning the ignition switch to the "OFF" position. This allows the contacts "C1" and "C2" to part and open-circuit the rotor field winding. The alternator will not generate if the contacts fail to close when the ignition is switched "ON".

Procedure:

With the ammeter connected as detailed in the previous test, remove the lead from the terminal "C2" and temporarily connect it to the "C1" terminal.

Conclusion of Test:

If the alternator generates its specified output with the two leads in position as described, a faulty relay is indicated. Restore the original terminal connections and make the usual checks for continuity of the relay-operating winding, relay circuit wiring, earth connection, etc. If there is voltage at the alternator field terminals when the ignition is switched "OFF", the relay is faulty due to its contacts not opening. This condition would discharge the battery.

If, however, the relay and associated circuit is found satisfactory, the 4TR voltage regulator may well be faulty, in which case substitute the existing unit for one which is known to be serviceable.

SERVICING THE ALTERNATOR

(Refer to Figs. 46 and 47)

Dismantling

1. Disconnect the battery and alternator cables and remove the alternator from the vehicle.

2. From the drive-end remove the shaft nut, spring washer, pulley and fan.

3. Unscrew and withdraw the three "through" bolts.

4. Mark the drive-end bracket, lamination pack and slip-ring end-cover so that they can be reassembled in correct angular relation to each other.

5. Withdraw the drive-end bracket and rotor from the stator. The drive-end bracket and rotor need not be separated unless the drive-end bearing requires examination (refer to paragraph 2 under the heading of "Ball and Needle Roller Bearings"), or the rotor is to be renewed. In this event the rotor must be removed from the drive-end bracket by means of a hand-press, having first removed the shaft key and bearing collar.

6. From the slip-ring end-cover remove the terminal nuts, washers, insulating pieces, brushbox screws and the 2BA hexagon-head bolt.

7. Withdraw the stator and heat sink assemblies from the slip-ring end-cover.

8. Close up the retaining tongue at the root of each field terminal blade and withdraw the brush-spring-and-terminal assemblies from the moulded brushbox.

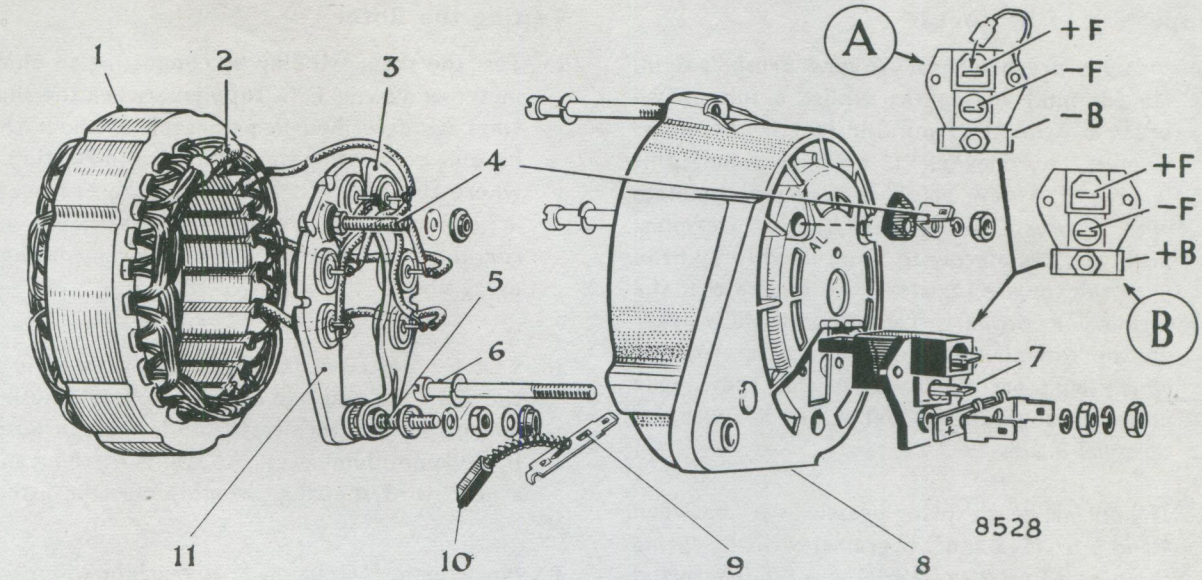

1. STATOR
2. STAR POINT
3. HEAT SINK ASSEMBLY (RIGHT-HAND)
4. WARNING LIGHT TERMINAL "AL"
5. OUTPUT TERMINAL
6. "THROUGH" FIXING BOLTS (3)
7. FIELD TERMINALS (2)
8. SLIP-RING END-COVER
9. TERMINAL BLADE RETAINING TONGUE
10. ROTOR SLIP-RING BRUSH
11. HEAT SINK ASSEMBLY (LEFT-HAND)

A. POSITIVE EARTH TERMINAL BLOCK
B. NEGATIVE EARTH TERMINAL BLOCK

Fig. 46. *Brushgear and diode heat sinks in exploded view*

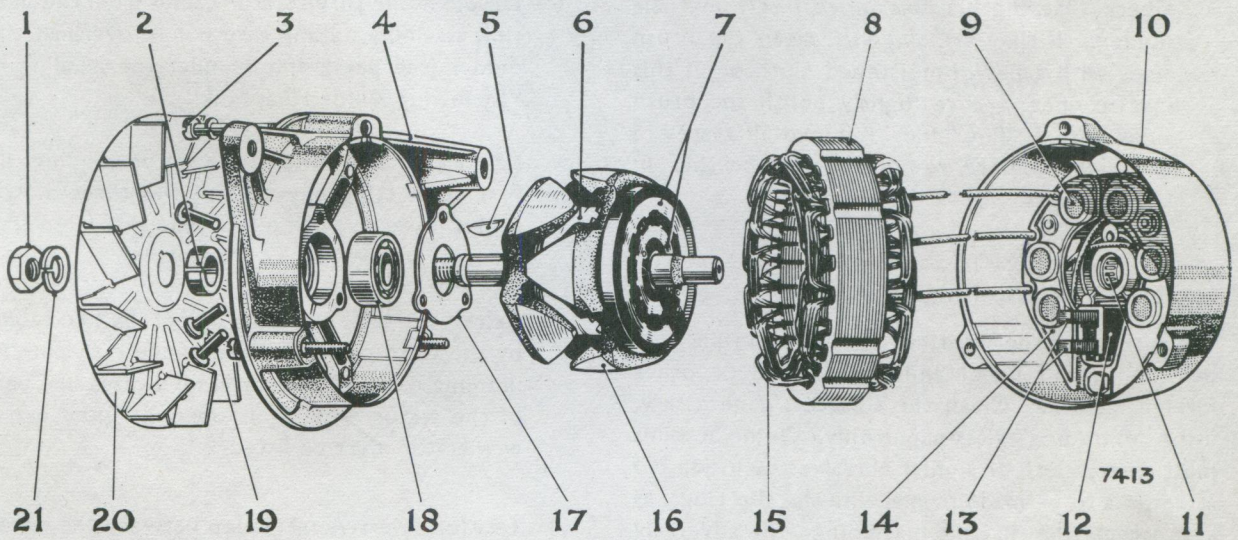

1. SHAFT NUT
2. BEARING COLLAR
3. "THROUGH" FIXING BOLTS (3)
4. DRIVE-END BRACKET
5. WOODRUFF KEY
6. ROTOR (FIELD) WINDING
7. SLIP-RINGS
8. STATOR LAMINATIONS
9. SILICON DIODES
10. SLIP-RING END-COVER
11. NEEDLE-ROLLER BEARING
12. BRUSH BOX MOULDING
13. BRUSHES
14. DIODE HEAT SINK
15. STATOR WINDINGS
16. ROTOR
17. BEARING RETAINING-PLATE
18. BALL BEARING
19. BEARING RETAINING-PLATE RIVETS
20. COOLING FAN
21. SPRING WASHER

Fig. 47. *Components of alternator*

Inspection of Brushgear

1. Measure brush length. A new brush is $\frac{5}{8}$ in. (15·88 mm.) in length; whilst a fully worn brush is $\frac{5}{32}$ in. (3·97 mm.) in length, therefore, it must be renewed at, or approaching this length. The new brush is supplied complete with a brush spring and "Lucar" terminal blade and has merely to be pressed in by hand until the tongue registers. To ensure that the terminal is properly retained, carefully lever up the retaining tongue with a screwdriver which has a narrow blade, so that the tongue makes an angle of approximately 30° with the terminal blade.

2. The normal brush spring pressures are between 4 and 5 oz. (113 and 142 grams) with the spring compressed to $\frac{25}{32}$ in. (19·84 mm.) in length and between $7\frac{1}{2}$ and $8\frac{1}{2}$ oz. (212 and 242 grams) with the spring compressed to $\frac{13}{32}$ in. (10·31 mm.) in length. These pressures are to be measured should the equipment necessary be available.

3. Check that the brushes move freely in their holders. If they are sluggish, clean the brush sides with a petrol-moistened cloth or if this fails to effect a cure, lightly polish the brush sides with a "fine" file. Remove all traces of brush-dust before re-housing the brushes in their holders.

Inspection of Slip-Rings

The surfaces of the slip-rings should, on inspection, be smooth and uncontaminated by oil or other foreign material. Clean the surfaces, if necessary, using "extra fine" glass-paper only. On no account must emery cloth or similar abrasives be used. No attempt is to be made to machine the slip-rings, as any eccentricity in the machining will adversely affect the high-speed performance of the alternator. The small current carried by the rotor winding, and the unbroken surface of the slip-rings mean that the likelihood of scored or pitted slip-rings is virtually negligible.

Testing the Rotor

1. Test the rotor winding by connecting an ohmmeter or 12-volt D.C. supply between the slip-rings (as described in paragraph 6 under the heading of "Testing the Alternator in Position", where this test was made with the brushgear in circuit). The readings of resistance or current must be as given in the aforementioned paragraph 6.

2. Test for defective insulation between each of the slip-rings and one of the rotor poles, using a mains low-wattage test lamp for the purpose. If the lamp illuminates, the coil is earthing and a new rotor/slip-ring assembly must be fitted.

3. No attempt is to be made to machine the rotor poles or to true a distorted shaft.

Testing the Stator

1. Unsolder the three stator cables from the heat sink assembly, taking care not to overheat the diodes (see paragraph 3 under the heading of "Renewing Diode Heat Sink").

   Check the continuity of the stator windings by first connecting any two of the three stator cables in series with a 1·5 watt test lamp (see General Data) and a 12 volt battery.

   Repeat the test, replacing one of the two cables by the third cable. Failure of the test lamp to illuminate on either occasion indicates that part of the stator winding is open-circuited and a new stator must be fitted.

2. Test for defective insulation between the stator coils and lamination pack with a mains test lamp. Connect the test probes between any one of the three cable ends and the lamination pack. If the lamp illuminates, the stator coils are earthing and a new stator must be fitted.

3. Before re-soldering the stator cable ends to the diode pins carry out the tests given under the heading of "Testing the Diodes".

Testing the Diodes

1. Each diode used in the Models 10AC and 11AC alternator can be checked by connecting it in series with a 1·5 watt test bulb (refer to General Data), across a 12-volt D.C. supply and then reversing the connections.
2. Current must flow, and the bulb illuminate, in one direction only. Should the bulb illuminate in both tests, or fail to illuminate in either, the diode is defective and the appropriate heat sink assembly must be renewed.
3. The foregoing procedure is adequate for service purposes.
4. Accuracy in measurement of diode resistance requires Factory equipment. Since the forward resistance of the diode varies with the voltage applied, no realistic readings can be obtained with battery-powered ohmmeters. However, should a battery ohmmeter be used, a good diode will yield "infinity" in one direction, and some indefinite, but much lower reading, in the other.

CAUTION: Never use ohmmeters of the type incorporating a hand-driven generator for checking diodes.

Renewing Diode Heat Sink

(Refer to Figs. 48 and 49)

1. The alternator heat sink assembly comprises two mutually insulated portions, one of positive polarity and the other negative. The diodes are not individually renewable, therefore, for ease of servicing, are supplied already pressed into the appropriate heat sink portion. The positive portion carries three cathode base diodes marked *red*, and the negative portion three anode base diodes marked *black*.

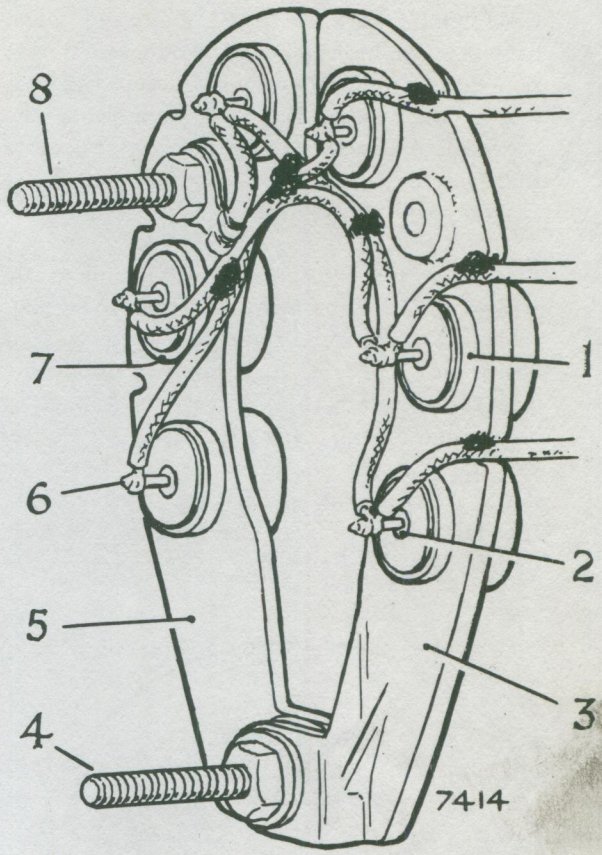

Fig. 48. *Diode heat sink assembly*

KEY TO FIG. 48

1. DIODE (3)
2. GLASS SEAL
3. HEAT SINK
4. OUTPUT TERMINAL
5. HEAT SINK
6. DIODE PIN
7. DIODE (3)
8. WARNING LIGHT TERMINAL "AL"

2. When soldering the interconnections, "M" grade 45—55 tin-lead solder must be used.
3. *Great care must be taken to avoid overheating the diodes.* The diode pins are to be *lightly* gripped with a pair of long-nosed pliers (which act as a thermal shunt) and the operation of soldering carried out as quickly as possible.

CAUTION: Care is to be exercised when handling the heat-sink and diode assemblies, as the diode pins, if bent, will fracture the glass seal at their base, this will then cause the appropriate assembly to become unserviceable and means that a new heat-sink and diode assembly will be required.

4. After soldering, the connections must be neatly arranged around the heat sinks (refer to Fig. 49), to ensure clearance of the rotor, and be tacked down with "3M" EC.1022 adhesive obtainable from the manufacturers, who are the Minnesota Mining and Manufacturing Co. Ltd., 3M House, Wigmore Street, London, W.1. The three stator connections must pass through the appropriate notches at the edge of the heat sinks.

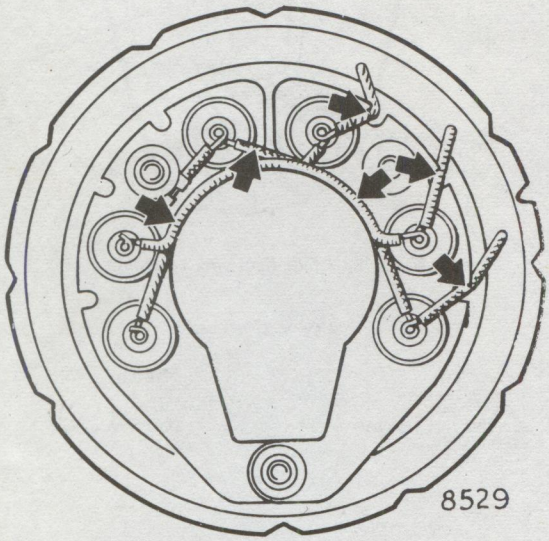

Fig 49. *Arrangement of securing internal connections with adhesive at points indicated by arrows*

Ball and Needle-Roller Bearings

Bearings which are worn to the extent that they allow excessive side movement of the rotor shaft must be renewed.

1. The needle-roller bearing in the slip-ring end-cover is supplied complete with the end-cover as a serviced item.

2. To renew the drive-end ball bearing (following withdrawal of the rotor shaft from the drive-end bracket) proceed as follows:—
   File away the roll-over on each of the three bearing retaining-plate rivets and punch out the rivets.
   Press the bearing out of the bracket.
   Before fitting the replacement bearing ensure that it is clean and, if necessary, pack it with high melting point grease.
   Locate the bearing in the housing and press it home.
   Refit the bearing retaining-plate, using new rivets.

Reassembly of the Alternator

(Refer to Figs. 46 and 47)

Reassembly of the alternator is the reversal of the dismantling procedure. Refer to the General Data for the torque loading figures of the following components.

(*a*) Brushgear fixing screws

(*b*) Diode heat sink fixings

(*c*) "Through" bolts (tighten "through" bolts by diagonal selection).

Take care to align the drive-end bracket, lamination pack and slip-ring end-cover correctly, the marking of which was described in paragraph 4 under the heading of "Dismantling".

If the rotor and drive-end bracket have been separated, the inner journal of the drive-end bearing must be supported by a tube of appropriate dimensions for the reassembling operation.

Do not use the drive-end bracket as a support for the bearing while fitting the rotor.

ALTERNATOR CONTROL

Lucas 4TR

CHECKING AND ADJUSTING

Several important points should be borne in mind when checking or adjusting the Lucas 4TR alternator voltage control unit in service. The 4TR is an electronic unit employing silicon semi-conductor devices, all moving parts being eliminated, and as such its characteristics differ from those associated with the vibrating-contact electromagnetic types, although in effect its action is similar.

Consequently, the procedures for checking or adjusting it in service are different from the well known methods applied to the vibrating contact types.

The first important point to remember is that the 4TR voltage setting must be checked or adjusted under closed-circuit conditions. Secondly, the alternator must be under load (approximately 2 amps.) during the time the regulating voltage is being checked or adjusted. And thirdly, the vehicle battery must be in a fully-charged condition in order to ensure accurate checking or adjustment of the regulating voltage.

Test instrument required

A direct-current voltmeter with scale 0 to 20 volts. The meter should be a good quality moving-coil type, with a scale such that accurate readings to within ·4 of a volt can be made. If available, the ideal meter to use would be a suppressed zero type, scale 12 to 15 volts.

In service it is only possible to check or adjust the voltage setting of the 4TR. If the voltage setting requires adjustment and cannot be set within the stated limits or is unstable, the only alternative is to fit a replacement unit.

Checking the voltage setting

Before proceeding to check the control unit ensure that:—

(*a*) The alternator fan belt tension and associated wiring connections are satisfactory (it is important to ensure that the control unit cables have not been crossed or reversed).

(*b*) The vehicle battery is in a fully-charged state (if necessary a substitute battery should be used for carrying out these tests).

(*c*) Run the alternator at charging speed for eight minutes. (This stage applies when bench testing, or testing on the vehicle).

Assuming that the conditions in (*a*), (*b*) and (*c*) are satisfactory, proceed to check the voltage setting as follows:—

1. Leave the existing connections to the alternator and 4TR control unit undisturbed.
2. Connect the voltmeter leads across the terminal posts of the battery.
3. Switch "ON" the side and tail lamps, start the engine, and slowly increase the engine speed until the alternator is running at approximately 3,000 r.p.m. (1,400 engine r.p.m.).

   The meter should register between the following limits:—

Voltage setting	*Ambient temperature*
13·9 to 14·3 volts	20°C. (68°F.) to 26°C. (78°F.)

The meter pointer should remain steady and indicate a voltage within the stated limits. The unit can

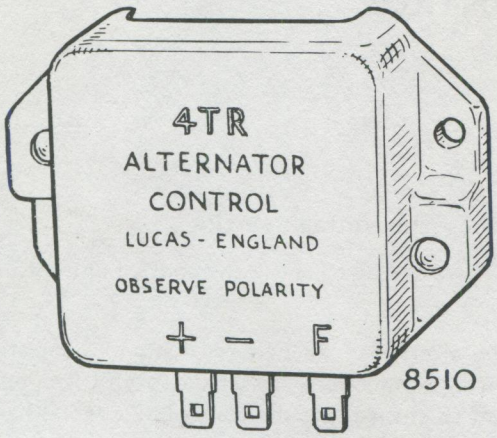

Fig. 50. *External view of 4TR Control Box*

be adjusted to control at the correct voltage (see "Adjusting") providing the reading on the meter has risen to a value slightly above battery terminal voltage, before finally registering a steady value, which may be outside the stated limits.

If, however, the voltmeter reading remains unchanged (at battery terminal voltage) or, conversely, increases in an uncontrolled manner then the control unit is faulty and, as its component parts are not serviced individually, a replacement unit must be fitted.

Adjusting the voltage setting

1. Stop the engine and withdraw the control unit mounting screws.
2. Invert the unit and chip away the sealing compound which conceals the potentiometer adjuster (Fig. 51).
3. Check that the voltmeter is still connected across the battery main terminals.
4. Start the engine and, while running the alternator at 3,000 r.p.m. (1,400 engine r.p.m.) turn the potentiometer adjuster slot, using a small wide-bladed screwdriver, clockwise to increase the voltage setting or anti-clockwise to decrease it, until the required setting is obtained.

Be careful when making this adjustment, a small amount of adjuster movement causes an appreciable difference in the voltage reading. Re-check the setting by first stopping the engine and then again running the alternator at 3,000 r.p.m. (1,400 engine r.p.m.). If the control unit regulates satisfactorily after the adjustment has been made, refit the unit to mounting point. No attempt should be made to reseal the potentiometer adjuster. Any undue heat applied to this point may damage the unit.

Effects of broken external connections to control unit

Connections:		Effect:
Terminal "+"	...	System voltage uncontrolled
Terminal "F"	...	No excitation
Terminal "—"	...	No excitation

Effects of reversed connections to control unit

Connections:		Effect:
"+" and "F"	...	No output
"+" and "—"	...	Control unit may be damaged
"F" and "—"	...	System voltage uncontrolled

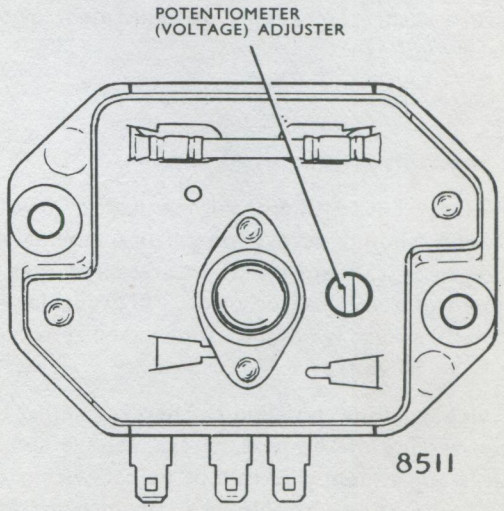

Fig. 51. *Rear view of 4TR Control Box showing potentiometer (voltage) adjuster*

CONTROL BOX

MODEL R.B. 340

GENERAL

Equipment

We have tested and recommend the Avo Model 12 (obtainable from Avo Ltd., 92—96 Vauxhall Bridge Road, London, S.W.1) which has been specially designed for automotive use and enables a very wide range of checking operations to be carried out with a single instrument.

Preliminary Checking of Charging Circuit

Before disturbing any electrical adjustments, examine as under to ensure that the fault does not lie outside the control box:—

1. Check the battery by substitution or with an hydrometer and a heavy discharge tester.

2. Inspect the generator driving belt. This should be just taut enough to drive without slipping.

3. Check the generator by substitution or by disconnecting the generator cables and linking the larger generator terminal "D" to the smaller terminal "F" and connecting a first grade moving coil 0—20 voltmeter between this link and earth and running the generator up to about 1000 r.p.m. when a rising voltage should be shown.

4. Inspect the wiring of the charging circuit and carry out continuity tests between the generator, control box and the ammeter.

5. Check earth connections, particularly that of the control box.

6. In the event of reported undercharging, ascertain that this is not due to low mileage.
Note—Should the control box fail to respond correctly to any adjustments given in the following instructions, it should be examined at a Lucas Service Depot or by an official Lucas Agent.

VOLTAGE REGULATOR

Open Circuit Settings

Ambient Temperature	*Voltage Setting*
10°C. (50°F.)	14·9—15·5
20°C. (68°F.)	14·7—15·3
30°C. (86°F.)	14·5—15·1
40°C. (104°F.)	14·3—14·9

Method of Adjustment

Checking and adjusting should be completed as rapidly as possible to avoid heating errors.

1. Withdraw both cables from control box terminals "B" and join them together with a suitable "jumper lead".

2. Connect the voltmeter between control box terminal "D" and a good earthing point. A convenient method of making this connection to terminal "D" is to withdraw the ignition warning light feed from control box terminal "WL" and to clip the voltmeter lead to the small terminal blade thus exposed—this terminal being electrically common with terminal "D".

3. Start the engine and run the generator at 3000 r.p.m.

4. Observe the voltmeter pointer.

The voltmeter reading should be steady and lie between the appropriate limits given, according to the temperature. An unsteady reading, i.e., one that fluctuates more than ±0·3 volts, may be due to unclean contacts. If the reading occurs outside the appropriate limits, an adjustment must be made. In this event, continue as follows:—

5. Stop the engine and remove the control box cover.

6. Restart the engine and run the generator at 3000 r.p.m.

7. Using the correct tool, turn the voltage adjustment cam until the correct setting is obtained—turning the tool clockwise to raise the setting or anti-clockwise to lower it.

8. Check the setting by stopping the engine and then again raising the generator speed to 3000 r.p.m.

9. Restore the original connections and refit the cover.

CURRENT REGULATOR

On-Load Setting

The current regulator on-load setting is equal to the maximum rated output of the generator, which is 25 amperes.

Method of Adjustment (Refer to Illustration)
The generator must be made to develop its maximum output, whatever the state of charge of the battery might be at the time of setting. The voltage regulator must therefore be rendered inoperative, and this is the function of the bulldog clip used in keeping the voltage regulator contacts together.

1. Remove the control box cover.

2. Using a bulldog clip, short out the voltage regulator contacts.

3. Disconnect the cables from control box terminals "B" and connect a first grade–0-40 moving-coil ammeter between these cables and terminal "B". (Both cables must be connected to the same ammeter terminal).

4. Switch on all lights.

5. Start the engine and run the generator at 500 r.p.m.

6. Observe the ammeter pointer.

The ammeter pointer should be steady and indicate a current of 24—26 amps. An unsteady reading, i.e. one that fluctuates more than ±1 ampere, may be

due to unclean contacts. If the reading is too high or too low, an adjustment must be made. In this event, continue as follows:—

7. Using the correct tool, turn the current adjustment cam (clockwise to raise the setting or anti-clockwise to lower it) until the correct setting is obtained.

8. Switch off and restore the original connections.

9. Refit the cover.

CUT-OUT RELAY

Electrical Settings

1. Cut-in Voltage: 12·6—13·4

2. Drop-off Voltage: 9·3—11·2

Method of Cut-in Adjustment

Checking and adjusting should be completed as rapidly as possible to avoid heating errors.

1. Connect a first grade–0-20 moving coil voltmeter between control box terminal "D" and a good earthing point. A convenient method of making this connection to terminal "D" is to withdraw the ignition warning light feed from control box terminal "WL" and to clip the voltmeter lead to the small terminal blade thus exposed—this terminal being electrically common with terminal "D".

2. Switch on an electrical load, such as the headlamps.

3. Start the engine and slowly increase the engine speed.

4. Observe the voltmeter pointer. The voltage should rise steadily and then drop slightly at the instant of contact closure. The cut-in voltage is that indicated immediately before the pointer drops back. If the cut-in occurs outside the correct limits, an adjustment must be made. In this event reduce the engine speed to below cut-in value and continue as follows:—

5. Remove the control box cover.

6. Using the correct tool, turn the cut-out relay adjustment cam until the correct setting is obtained—turning the tool clockwise to raise the setting or anti-clockwise to lower it.

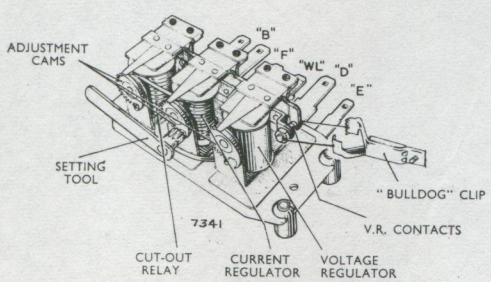

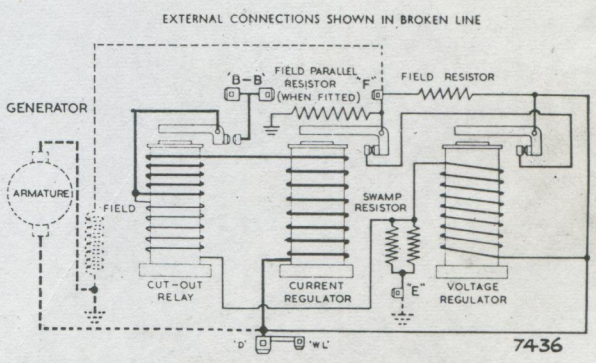

Current-voltage control box and internal wiring diagram

7. Repeat the above checking procedure until the correct setting is obtained.

8. Switch off, restore the original connections and refit the cover.

Method of Drop-off Adjustment

1. Disconnect the cables from control box terminal "B" and connect a first-grade 0–20 moving-coil voltmeter between this terminal and earth. Join the cables removed from "B", using a suitable "jumper lead".

2. Start the engine and run up to approximately 3000 r.p.m.

3. Slowly decelerate and observe the voltmeter pointer.

Opening of the contacts, indicated by the voltmeter pointer dropping to zero, should occur between 9·3—11·2 volts. If the drop-off occurs outside these limits, an adjustment must be made. In this event, continue as follows:—

4. Stop the engine and remove the control box cover.

5. Adjust by carefully bending the fixed contact bracket. Closing the contact gap will raise the drop-off voltage. Opening the gap will reduce the drop-off voltage.

6. Repeat 2 and 3 and, if necessary, re-adjust until the correct drop-off setting is obtained.

7. Restore the original connections and refit the cover.

CLEANING CONTACTS

Regulator Contacts

To clean the voltage or current regulator contacts, use fine carborundum stone or silicon carbide paper followed by methylated spirits (denatured alcohol).

Cut-out Relay Contacts

To clean the cut-out relay contacts, use a strip of fine glasspaper—never carborundum stone or emery cloth.

ADDITIONAL INFORMATION

GENERATOR RE-POLARIZATION

A replacement generator (dynamo) of the type described in this Section is suitable for use on either positive or negative earth systems, provided it is polarized to suit the vehicle's electrical system after fitting.

To do this, fit the generator to the vehicle but do not at this stage connect the cables to the 'D' and 'F' terminals.

Determine which battery terminal is earthed on the vehicle and then temporarily connect a jumper lead to the battery positive terminal (for negative earth systems) or negative terminal (for positive earth systems).

Flick the other end of the jumper lead several times against terminal 'F' this serves to re-polarize the generator.

The temporary connection can now be removed and the original cables connected to terminals 'D' and 'F'.

INSTRUMENT VOLTAGE STABILIZER

This unit is fitted to Imperial from first production and to Super Snipe models from Series IV onwards. It is shown with its associated circuit connections in the wiring diagram for the particular model. Its purpose is to stabilize the voltage which operates the fuel and water temperature gauges, since constant voltage is necessary to ensure the correct readings on these instruments. The unit is of integral construction and should be renewed when faulty, as it cannot be repaired. When fitting a new unit the precautions shown in Fig. 53 must be strictly observed.

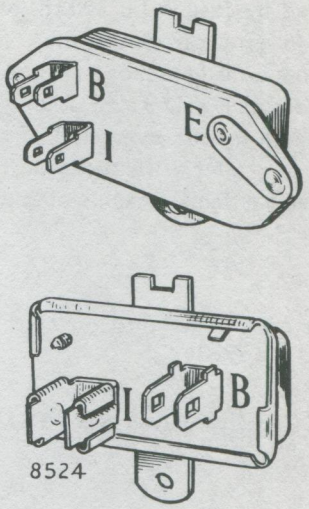

SERVICING PRECAUTIONS

Ensure that the cables from the instruments are connected to their proper terminals on the stabilizer.

Ensure that the stabilizer is mounted with its securing lug set vertically and the fixing hole downwards.

Ensure that the stabilizer is effectively earthed through its mounting lug.

Failure to observe the precautions will result in inaccurate instrument readings.

Fig. 53. *Two types of voltage stabilizer to be found in service*

CARAVAN AND TRAILER LIGHTING REQUIREMENTS

Two important factors must be borne in mind before any attempt is made to connect caravan or trailer lighting equipment into the electrical system of a towing vehicle; first, the work must conform to legal requirements which stipulate that a caravan or trailer lighting equipment must operate in unison with that on the towing vehicle; and secondly, the electrical connections must be made in a manner that will not overload the units in the towing vehicle's electrical system.

It must be understood that the units in the vehicle's lighting system are rated to control at a certain wattage, in particular the flasher unit and stop-lamp switch, which would be seriously overloaded if additional bulbs were parallel-connected and

allowed to operate simultaneously. Such methods can only lead to serious trouble and must be avoided.

Circuit schemes devised by Joseph Lucas Ltd. provide for the correct integration of the electrical equipment. Each scheme is designed for a particular application and incorporates a 2TU Relay Unit. The relay unit provides simultaneous operation of the lamps on the caravan or trailer with those on the towing vehicle. Further particulars can be obtained from the manufacturers.

ELECTRIC WINDSCREEN WASHER 5SJ

(Refer to Fig. 54)

The 5SJ is a non-automatic windscreen washer remotely controlled by a push-button switch on the facia panel. Operation is by a centrifugal pump driven by a small electric motor. The motor is mounted on the pump cover and remains in operation for as long as the push-button is depressed. The washer is smaller than the 2SJ type described earlier and has only two terminals. It is distinguished by its moulded polythene container and is suitable for any proprietary screenwashing and defrosting additives in any proportion.

Servicing

The only lubrication required is to add two drops of thin machine oil to the felt pad around the motor drive spindle, if the motor is found to run sluggishly after lengthy service. The pad must not be overlubricated, since any excess oil may seep into the water container with consequent smearing of the windscreen.

Testing the circuit

If the motor does not run when the panel switch is operated, check that the supply is available at the motor terminals as follows:—

Connect a suitably scaled D.C. voltmeter, red lead to the black earth cable, and black lead to the green cable with black tracer.

Operate the panel switch and note the voltmeter reading. This should be the same as the battery voltage. If no reading is obtained, the fault lies in the circuit. A check of the fuse, cables and terminals should reveal the fault.

If, however, the supply voltage is available at the terminals and the motor does not operate, an internal fault is indicated.

If the cables have been disconnected for any reason, it is essential that the correct polarity is observed when remaking the terminal connections.

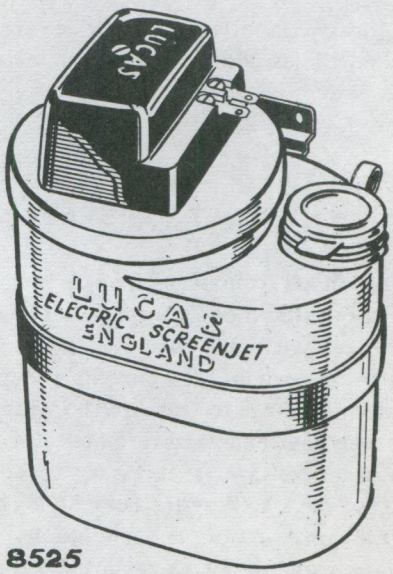

Fig. 54. *Electric Windscreen Washer 5SJ*

DIAGNOSIS AND TESTING PROCEDURE

STARTER MOTOR

Symptoms	Possible Causes	Remedy
	Stiff engine, indicated by inability to turn by hand.	Locate and remedy cause of stiffness.
	If engine can be turned by hand then trouble may be due to:—	
	Battery discharged.	Start by hand. Charge battery either by a long period of day-time running or from independent electrical supply.
Starter motor lacks power or fails to turn engine.	**Broken or loose connection in starter circuit.**	See that connections to battery, starter and starter switch are tight, and that cables connecting these units are not damaged.
	Starter commutator or brushes dirty.	Clean.
	Brushes worn, or not fitted correctly.	Replace worn brushes. See that brushes "bed" correctly.
	Starter pinion jammed in mesh with flywheel.	Rotate squared end of starter shaft with spanner.
Starter operates, but does not crank engine.	**Pinion of starter drive does not engage with flywheel, due to dirt on screwed sleeve.**	Clean sleeve with paraffin.
Starter pinion will not disengage from flywheel when engine is running.	Starter pinion jammed in mesh with flywheel.	Rotate squared end of starter shaft with spanner.

DIAGNOSIS AND TESTING PROCEDURE

D.C. GENERATOR (DYNAMO) CHARGING SYSTEM

Symptoms	Probable Fault	Remedy
	Generator not charging when running at about 20 m.p.h. with no lights in use. Due to:—	
	Broken or loose connection in generator circuit, or regulator not functioning correctly.	Examine charging and field circuit wiring. Tighten loose connection or replace broken lead. Particularly examine battery connections. Return regulator to Lucas Service Depot for attention.
	Commutator greasy or dirty.	Clean with soft rag moistened in petrol.
Battery in low state of charge, shown by lack of power when starting. (Hydrometer reading less than 1.200).	**Giving low or intermittent output, when car is running steadily in top gear.** Due to:—	
	Generator belt slipping.	Adjust belt (see Section B).
	Loose or broken connections in generator circuit.	Examine charging and field circuits wiring. Tighten loose connections or replace broken lead. Particularly examine battery connections.
	Brushes greasy or dirty.	Clean with soft rag moistened in petrol.
	Brushes worn or not fitted correctly.	Replace worn brushes. See that brushes "bed" correctly.
	Regulator not functioning correctly.	Service regulator.
Battery overcharged, shown by burnt-out bulbs and very frequent need for "topping up". Hydrometer readings high.	**Giving high output.** Due to:—	
	Regulator not functioning correctly.	Service regulator.

DIAGNOSIS AND TESTING PROCEDURE

SYSTEMS EMPLOYING ALTERNATOR

THIS CHART should be used in conjunction with the circuit diagrams shown overleaf, and the procedure must be carried out in the sequence indicated, except for the last item which can be carried out separately. Throughout the procedure, the precautions outlined earlier in this Section must be strictly observed to avoid damaging the units in the system.

Unit	Recommended Procedure
DRIVING BELT	Check for wear and tension. Renew or adjust as necessary
CIRCUIT	Test continuity of circuit and tighten all connections. Check for reversed cables and defective insulation.
BATTERY	Check condition of battery. Clean and tighten terminal connections. Check for current at the alternator positive field terminal when the ignition is switched "OFF". Any current at this point when the ignition is "OFF" indicates that the 6RA relay contacts are not opening, thus allowing the battery to discharge through the alternator field. Remedy by fitting a new relay.
FIELD ISOLATING RELAY 6RA	Check that current is reaching the alternator positive field terminal when the ignition is switched "ON". If there is no current, temporarily link the relay terminals "C1" and "C2" by means of a jumper lead. If the alternator now shows an output at charging speed, the relay is faulty and must be renewed.
ALTERNATOR 10AC OR 11AC	Test the current output of the alternator in the manner described earlier in this Section. At alternator speed of approximately 4,000 r.p.m. (1,800 engine r.p.m.) the output should be 25 amperes or more for the 10AC alternator, or 35 amperes or more for the 11AC alternator. A low or zero current reading will indicate a faulty alternator or poor circuit connections. Renew or rectify as necessary.
CONTROL UNIT 4TR	If the foregoing items are in good order, the fault will lie in the control unit. Test and adjust the unit in the manner described earlier in this Section. If the unit will not respond to adjustment, a replacement must be fitted. If a replacement is fitted, check the alternator current output as previously.
WARNING LAMP AND WARNING LAMP CONTROL 3AW	Check the voltage between alternator terminal "AL" and earth with the alternator running at 3,000 r.p.m. (1,400 engine r.p.m.) and side lamps switched "ON"; if the voltage exceeds 7·5 a faulty alternator diode or a faulty alternator-to-battery circuit is indicated. Fit new alternator or rectify as necessary. If the voltage at terminal "AL" is correct (between 7 and 7·5) check the warning lamp circuit, then the warning lamp bulb and warning lamp control 3AW by substitution. Fit new parts as necessary.

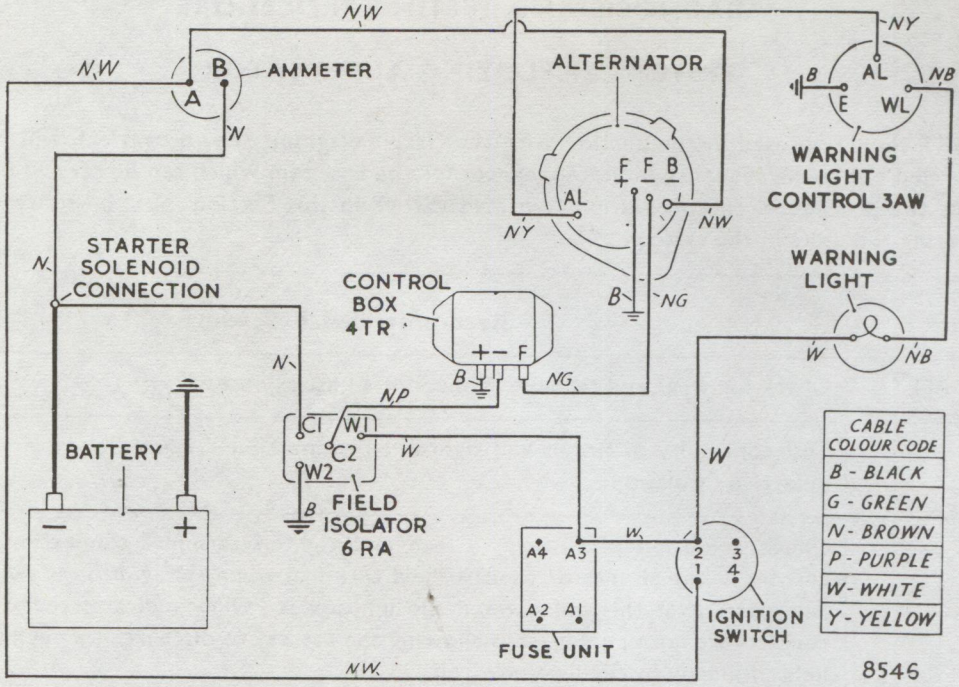

Fig. 55. *Alternator charging circuit—*POSITIVE *earth system*

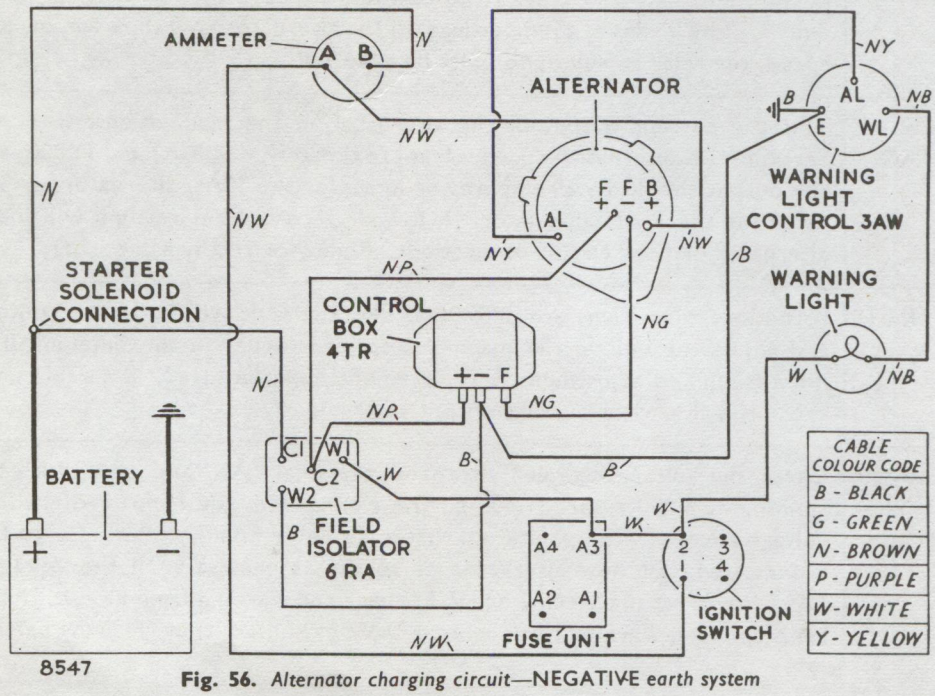

Fig. 56. *Alternator charging circuit—*NEGATIVE *earth system*

IGNITION TROUBLE.

Symptoms	Possible Causes	Remedy
Engine will not fire or misfires.	Test if coil sparks by removing lead from centre distributor terminal and hold it about $\frac{3}{16}$" away from some metal part of the chassis while engine is turned over. If sparks jump gap regularly the coil and distributor are functioning correctly.	Examine the sparking plugs, and if these are clean and the gaps are correct, the trouble is due to carburettor petrol supply, etc.
	If the coil does not spark, the trouble may be due to any of the following causes:— **Fault in low tension wiring.** Indicated by (1) No ammeter reading when engine is slowly turned and ignition switch is on; or (2) No spark occurs between the contacts when quickly separated by the fingers when the ignition switch is on.	Examine all cables in ignition circuit and see that all connections are tight. See that battery terminals are secure.
	Dirty or pitted contacts.	Clean contacts with fine carborundum stone or fine emery cloth and afterwards with a cloth moistened with petrol.
	Contact breaker out of adjustment. Turn engine until contacts are fully opened and test gap with gauge.	Adjust gap to correct setting.
	Remove each sparking plug in turn, rest it on the cylinder head, and observe whether a spark occurs at the points when the engine is turned. Irregular sparking may be due to dirty plugs or defective high tension cables. If sparking is regular at all plugs, the trouble is probably due to engine defects.	Clean plugs and adjust the gaps to 0·025" (0·63 mm.). Replace any lead if the insulation shows signs of deterioration or cracking. Examine the carburettor, petrol supply, etc.

SUPER SNIPE

SERIES I & II

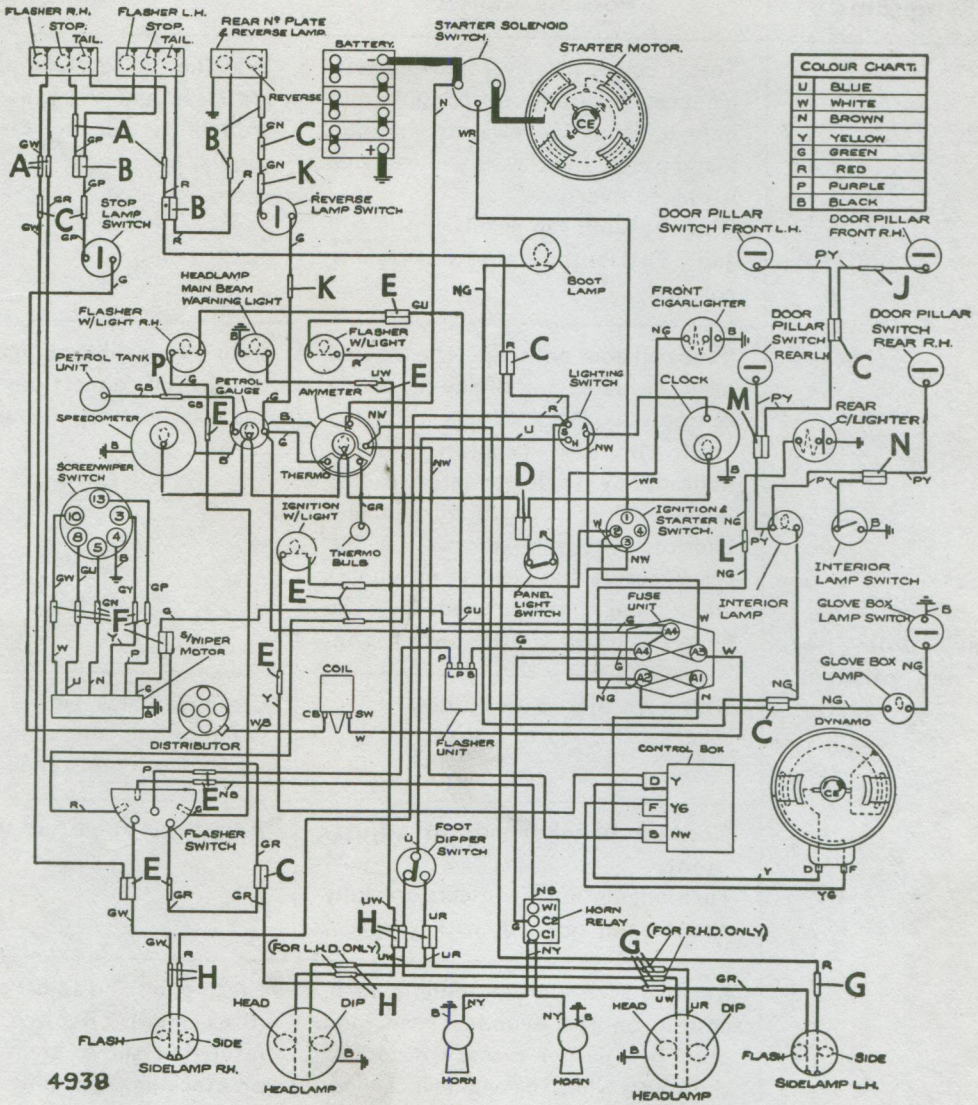

For location of Snap Connectors, see opposite page.

NOTE

On early Series I cars the boot lamp is wired in parallel with the rear number plate lamp.

SUPER SNIPE
SERIES III

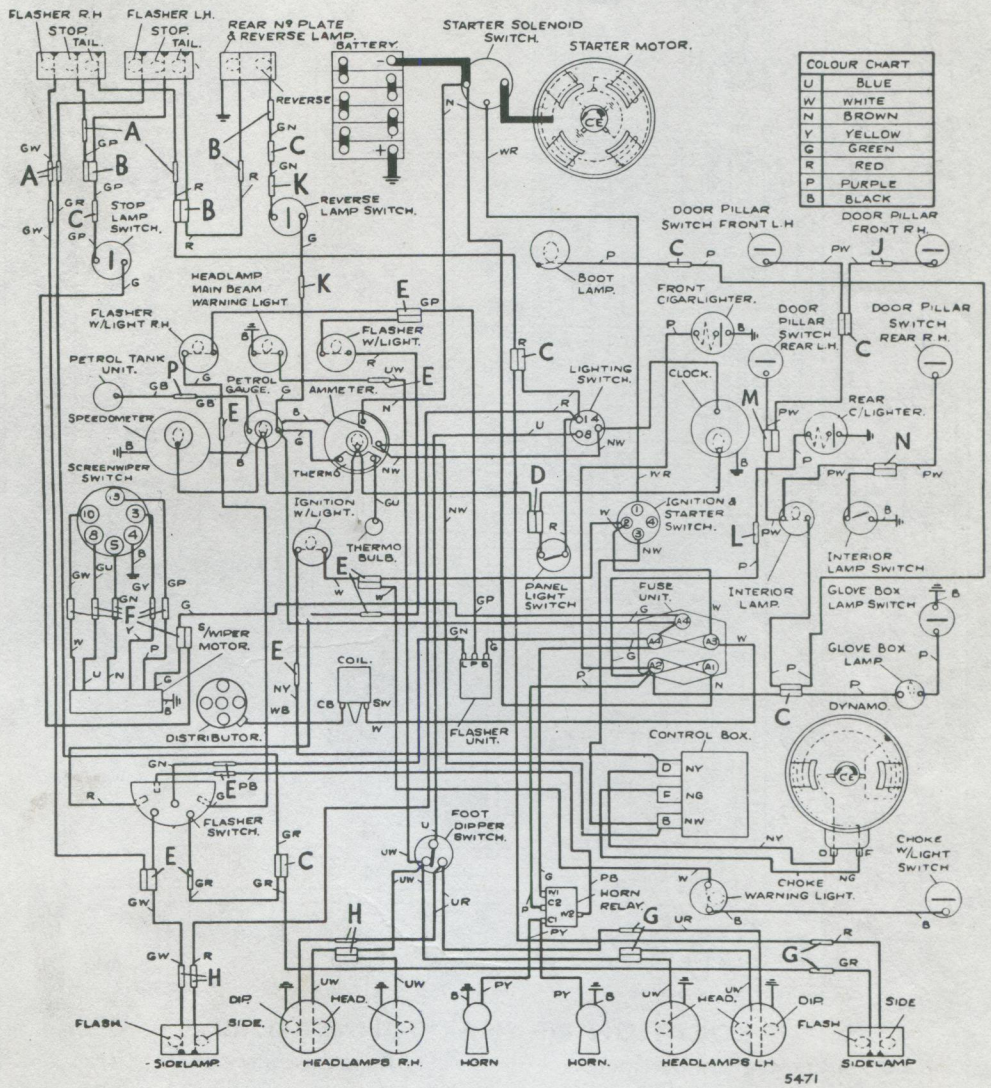

Colour Chart	
U	Blue
W	White
N	Brown
Y	Yellow
G	Green
R	Red
P	Purple
B	Black

LOCATION OF SNAP CONNECTORS

A. Right-hand side of boot.
B. Left-hand side of boot.
C. Under facia left-hand side.
D. Under facia behind panel light switch.
E. Under facia adjacent to steering column.
F. Under bonnet adjacent to control box.
G. Left-hand wing valance under bonnet.
H. Right-hand wing valance under bonnet.
J. Under facia on right-hand side.
K. Under bonnet on right-hand side of bulkhead.
L. Underneath centre of front seat.
M. Behind trim on top of left-hand centre top pillar.
N. Behind trim on top of right-hand centre top pillar.
P. Top left hand side of boot.

SUPER SNIPE
SERIES IV

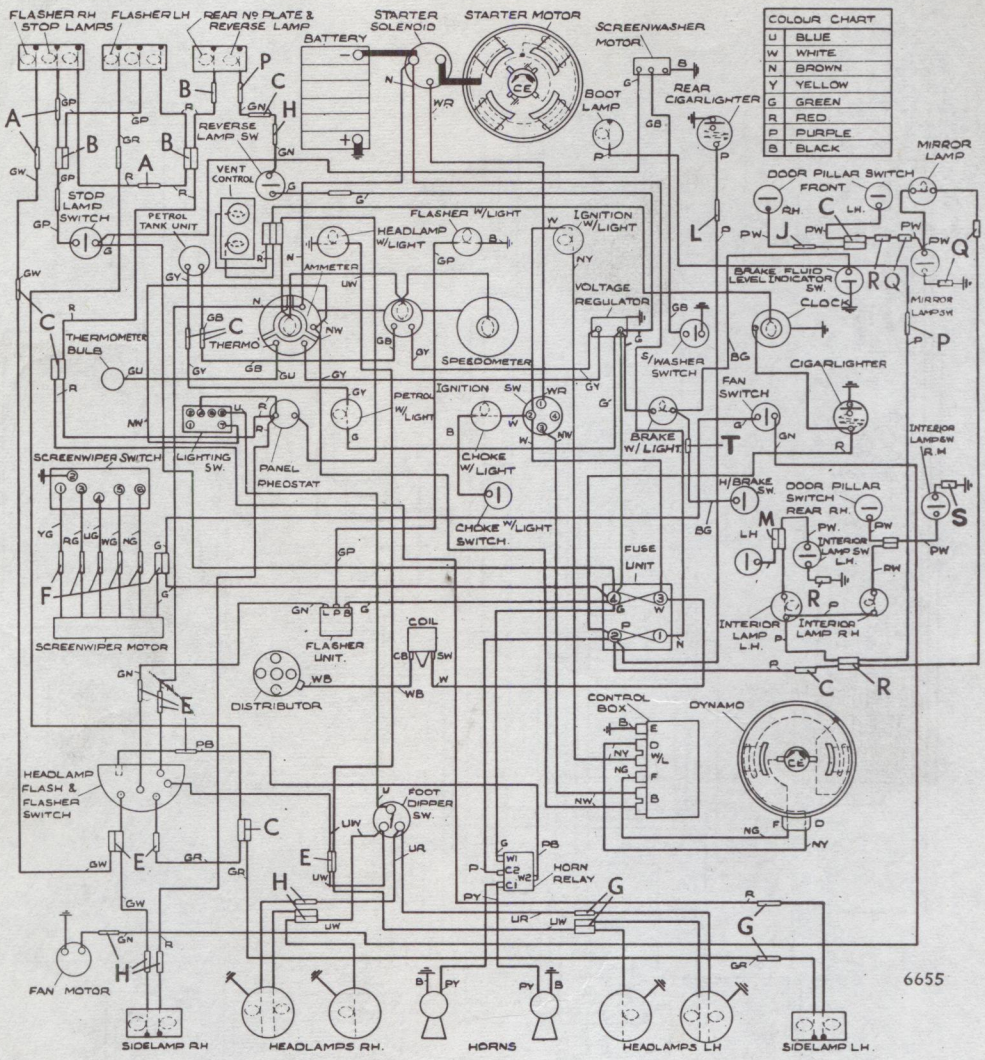

LOCATION OF SNAP CONNECTORS

A. Right-hand side of luggage compartment.
B. Left-hand side of luggage compartment.
C. Under facia left-hand side.
D. Under facia behind panel light switch.
E. Under facia adjacent to steering column.
F. Under bonnet adjacent to control box.
G. Left-hand wing valance under bonnet.
H. Right-hand wing valance under bonnet.
J. Under facia on right-hand side.
K. Under bonnet on right-hand side of engine bulkhead.
L. Beneath centre of front seat.
M. Behind trim on top of left-hand centre top pillar.
N. Behind trim on top of right-hand centre top pillar.
P. Top left-hand side of luggage compartment.
Q. In rail above windscreen.
R. In B.C. post left-hand side.
S. In B.C. post right-hand side.
T. Adjacent to foot dipping switch.

SUPER SNIPE
SERIES IV (POLICE)

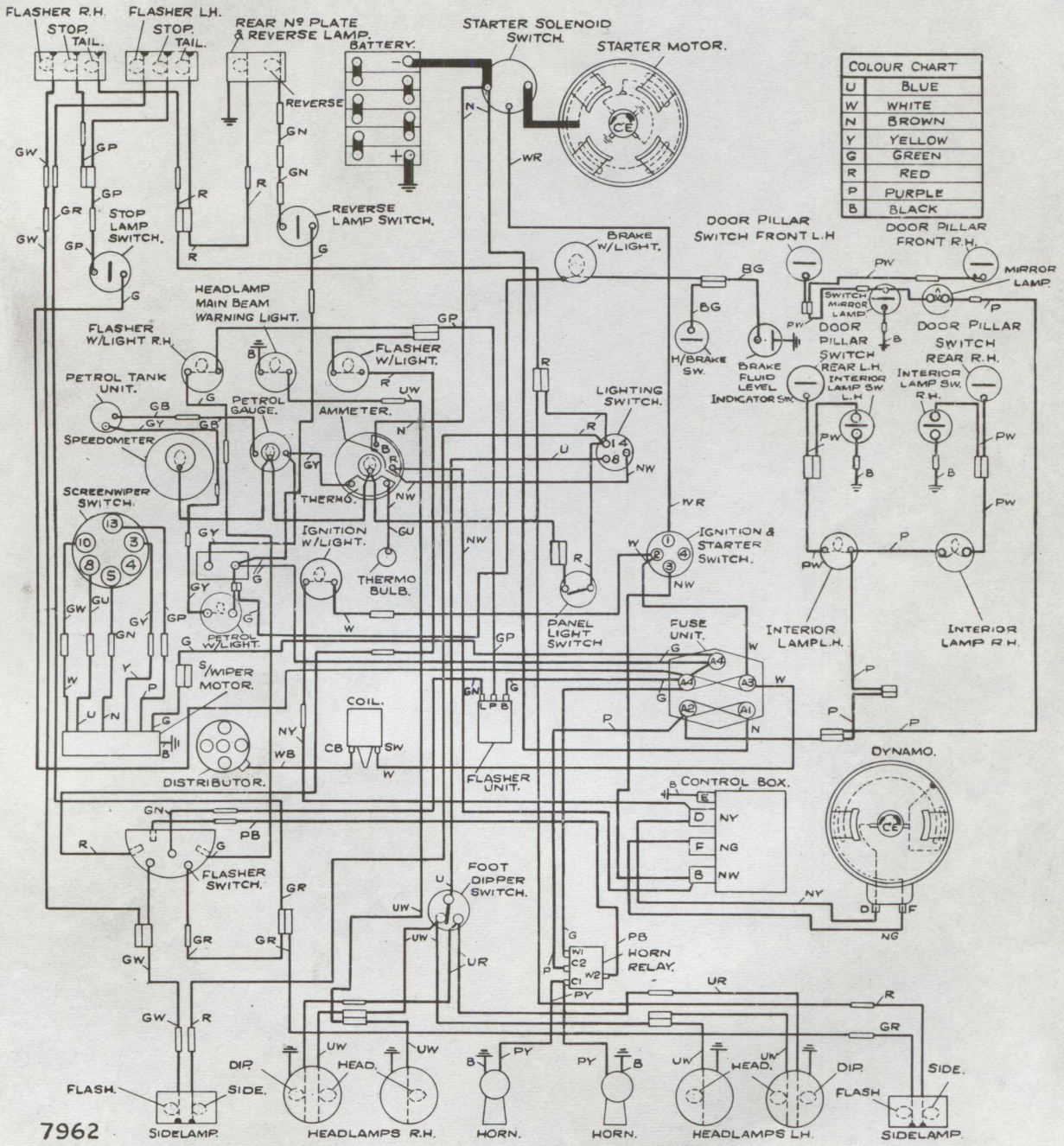

7962

SUPER SNIPE

SERIES V SALOON WITH POSITIVE EARTH SYSTEM

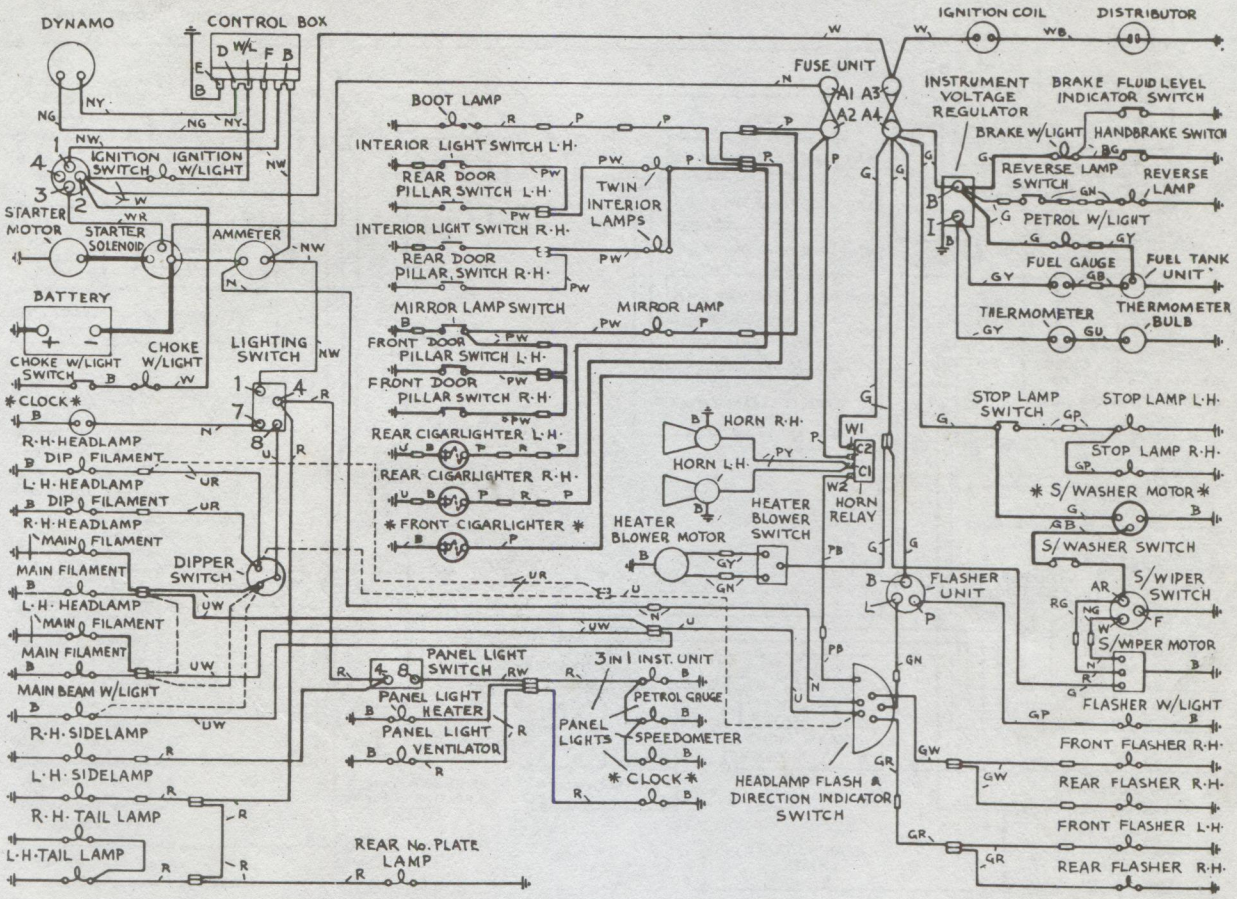

COLOUR CHART	
R	RED
Y	YELLOW
G	GREEN
U	BLUE
N	BROWN
P	PURPLE
W	WHITE
B	BLACK

CODE

------ ALTERNATIVE WIRING FOR L·H·D· MODELS

—▭— SNAP CONNECTORS

B —|— EARTH VIA CABLE

—|— EARTH VIA BOLT

NOTE ITEMS MARKED * * NOT FITTED ON MODELS FOR SUDAN

7613

SUPER SNIPE

SERIES V ESTATE WITH POSITIVE EARTH SYSTEM

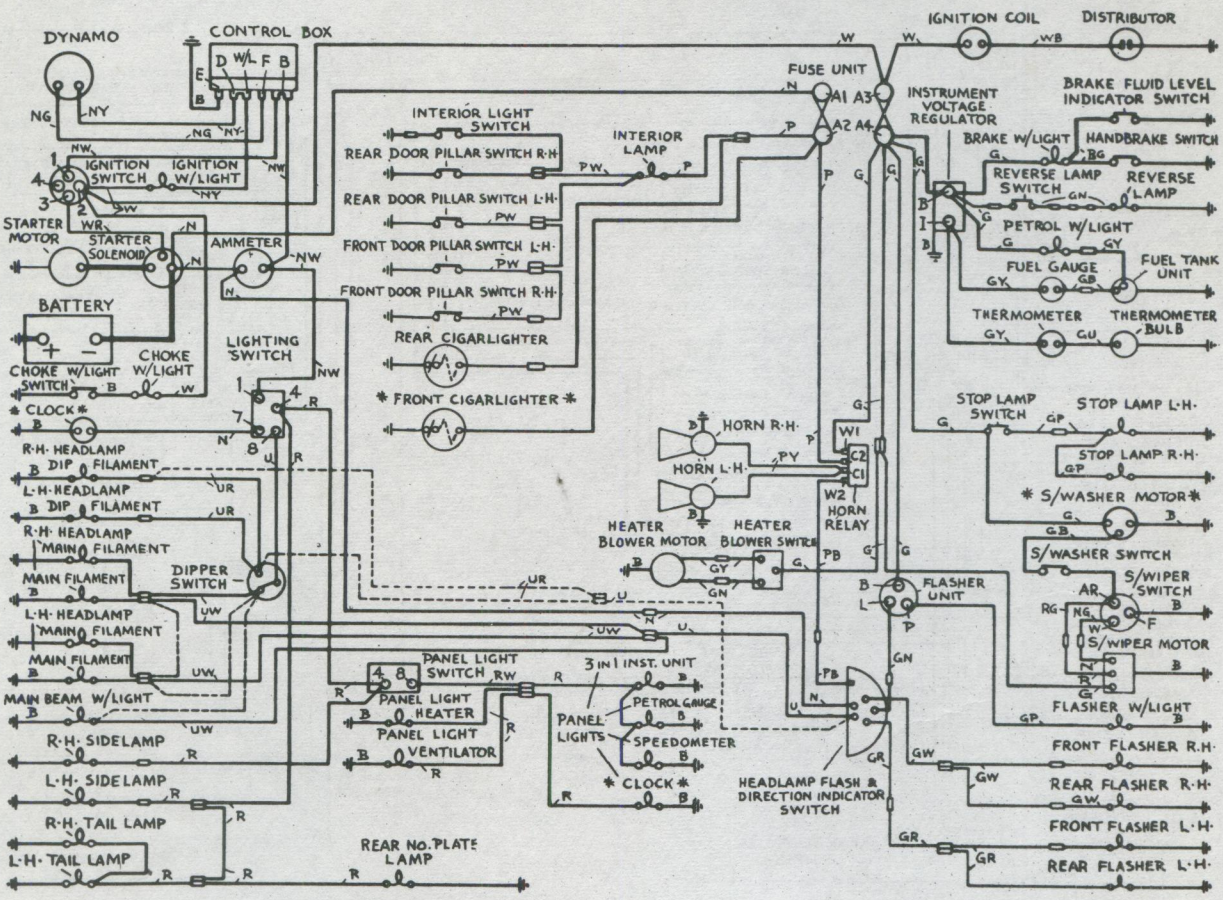

COLOUR CHART	
R	RED
Y	YELLOW
G	GREEN
U	BLUE
N	BROWN
P	PURPLE
W	WHITE
B	BLACK

CODE

------- ALTERNATIVE WIRING FOR L·H·D· MODELS

SNAP CONNECTOR

B EARTH VIA CABLE

EARTH VIA BOLT

NOTE ITEMS MARKED * * NOT FITTED ON MODELS FOR SUDAN

7611

SUPER SNIPE
SERIES V ESTATE (POLICE) WITH POSITIVE EARTH SYSTEM

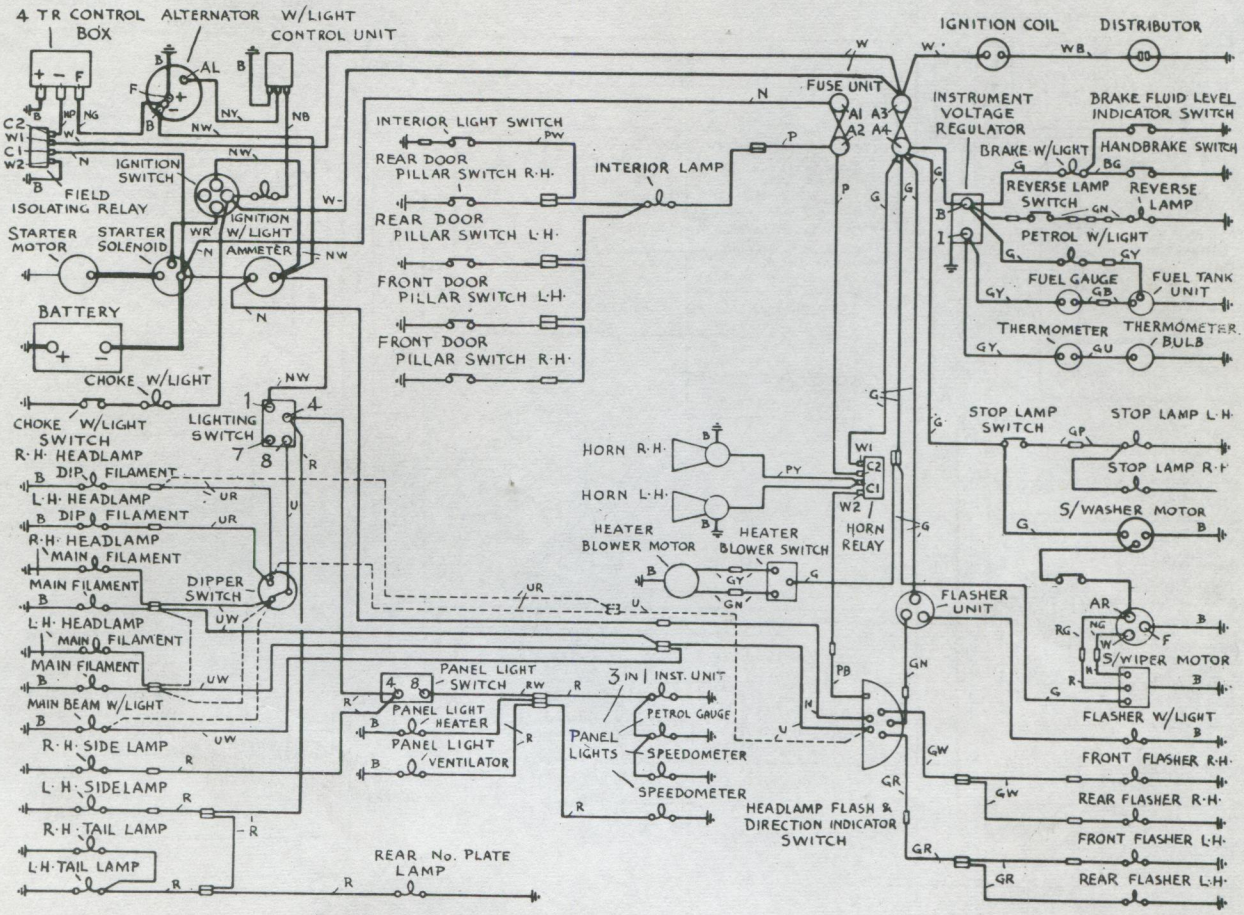

COLOUR CHART	
R	RED
Y	YELLOW
G	GREEN
U	BLUE
N	BROWN
P	PURPLE
W	WHITE
B	BLACK

CODE

- ALTERNATIVE WIRING FOR L.H.D MODELS
- SNAP CONNECTOR
- EARTH VIA CABLE
- EARTH VIA BOLT.

7615

SUPER SNIPE
SERIES V SALOON (POLICE) WITH POSITIVE EARTH SYSTEM

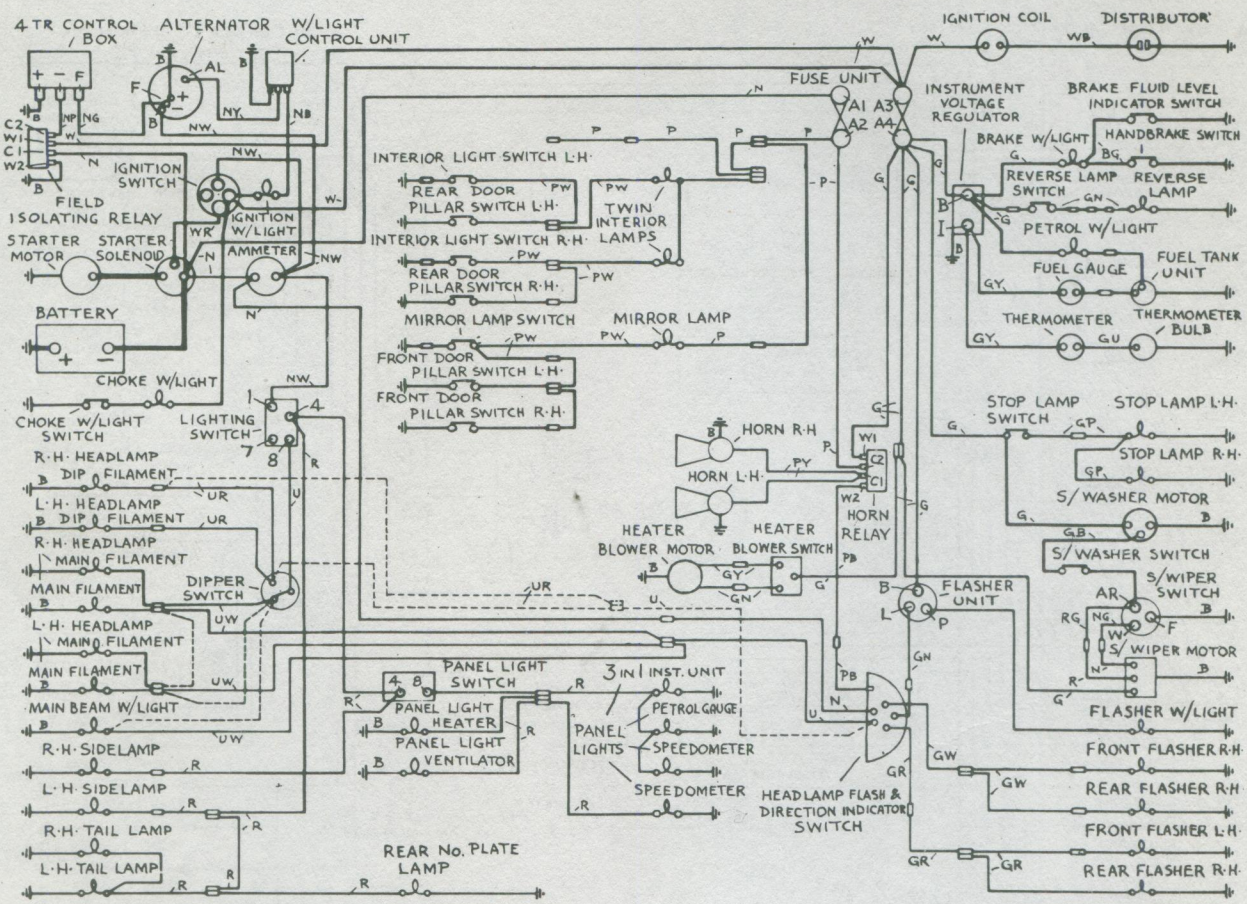

COLOUR CHART	
R	RED
Y	YELLOW
G	GREEN
U	BLUE
N	BROWN
P	PURPLE
W	WHITE
B	BLACK

CODE

- ALTERNATIVE WIRING FOR L.H.D. MODELS.
- SNAP CONNECTOR.
- EARTH VIA CABLE.
- EARTH VIA BOLT.

7614.

IMPERIAL
WITH POSITIVE EARTH SYSTEM

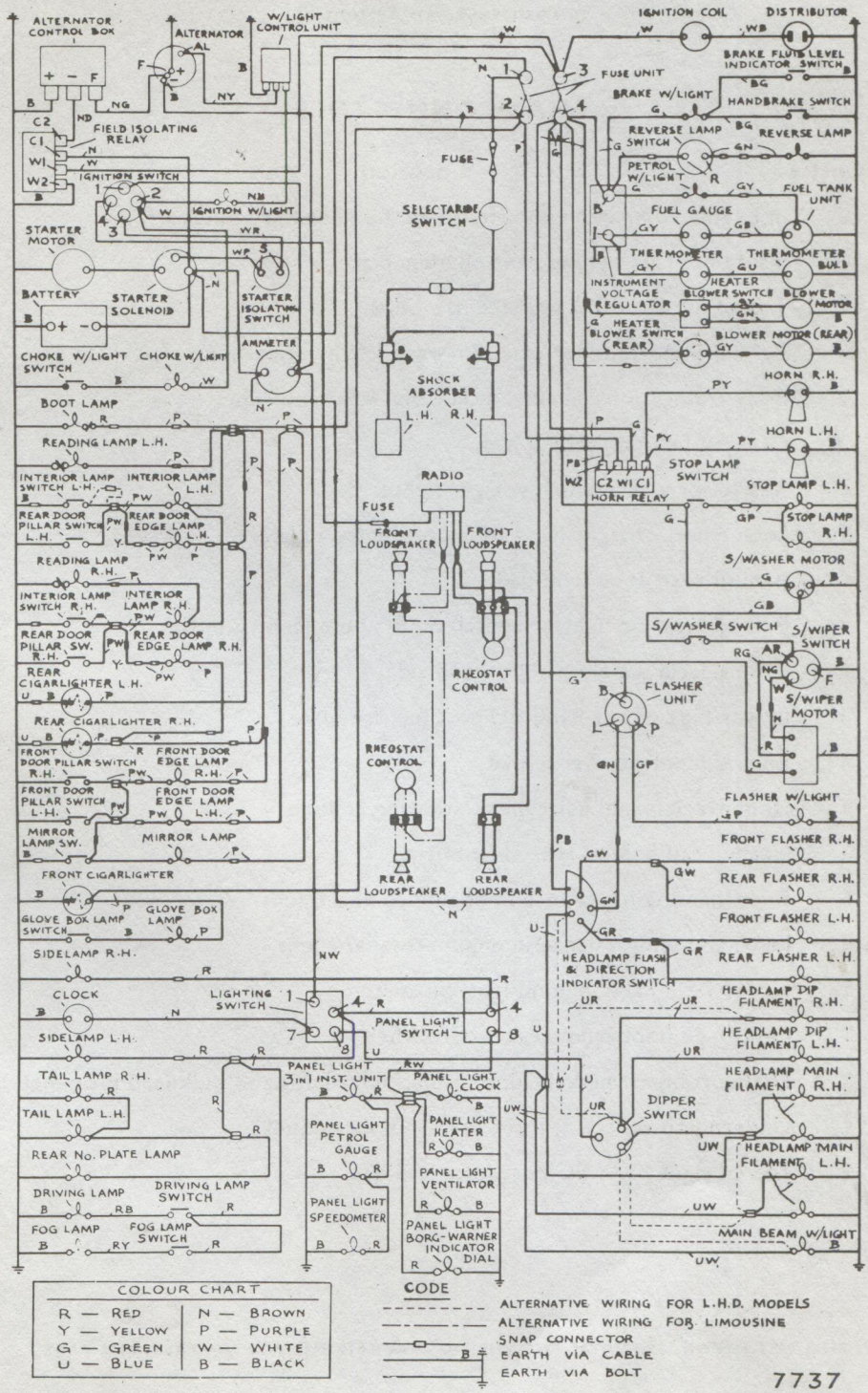

A LIST OF SNAP CONNECTOR LOCATIONS IS SHOWN OVERLEAF

IMPERIAL

Positive Earth System

SNAP CONNECTORS

Quantity	Location
2	In engine compartment at left-hand bulkhead grommet
1	Inside boot lid behind rear number plate
1	Top of left-hand BC post (centre pillar)
3	Behind boot lid inner panel forward left-hand corner
9	Body connections—below facia panel left-hand side
2	Cantrail behind reading lamp
4	Rear door armrest below cigar lighter
2	Lower part of right-hand BC post (centre pillar)
6	Behind rear door trim pad
4	Behind interior lighting switch on BC post (centre pillar)
1	Behind facia panel on right-hand side
2	Lower part of left-hand BC post (centre pillar)
4	Behind front door trim pad
5	Under facia panel adiacent to steering column
3	Header rail behind rear view mirror
6	Right-hand wing valance in engine compartment
4	Left-hand wing valance in engine compartment
1	Under facia panel behind ignition switch
1	In luggage boot below rear parcel shelf
3	Engine compartment behind insulation at left-hand bulkhead grommet
1	Underneath centre of front seat on floor tunnel
1	Top of right hand BC post (centre pillar)

THIS LIST IS FOR USE WITH THE WIRING DIAGRAM SHOWN ON PREVIOUS PAGE

SUPER SNIPE SERIES V SALOON, INCLUDING POLICE SALOON

NEGATIVE EARTH WIRING DIAGRAM from Chassis Number B.084600001

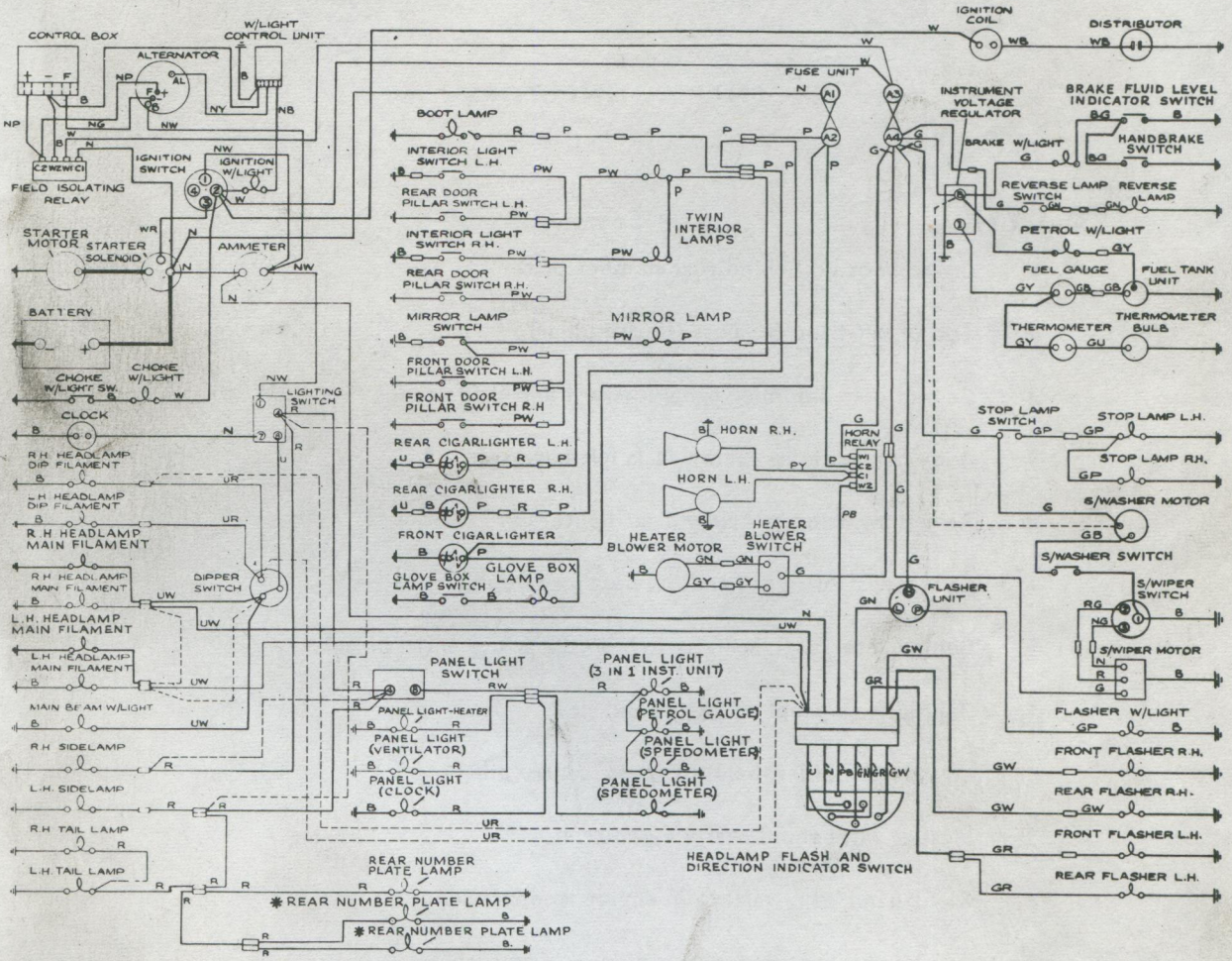

COLOUR CHART	
R	RED
Y	YELLOW
G	GREEN
U	BLUE
N	BROWN
P	PURPLE
W	WHITE
B	BLACK

NOTE – CIGARLIGHTERS, CLOCK, GLOVE-BOX LAMP AND BOOT LAMP NOT FITTED ON POLICE CARS.
ADDITIONAL PANEL LIGHT FOR SPEEDOMETER FITTED ON POLICE CARS ONLY.
SCREENWASHER MOTOR, FRONT CIGARLIGHTER, GLOVEBOX LAMP AND CLOCK NOT FITTED ON CARS FOR SUDAN.
* FITTED ON U.S.A AND WEST GERMANY CARS ONLY.

CODE

------ ALTERNATIVE WIRING FOR LEFT HAND DRIVE MODELS.
—o— SNAP CONNECTOR.
B EARTH VIA. CABLE.
EARTH VIA. BOLT.

8538

A LIST OF SNAP CONNECTOR LOCATIONS IS SHOWN OVERLEAF

SUPER SNIPE V SALOON, INCLUDING POLICE SALOON

Negative Earth System

SNAP CONNECTORS

Quantity	Location
1	Inside boot lid behind rear number plate
1	Top of left-hand BC post (centre pillar)
3	Behind boot lid inner panel forward left-hand corner
9	Body connections—below facia left-hand side
4	Rear door armrest below cigar lighter
1	Lower part of right-hand BC post (centre pillar)
5	Behind interior lighting switch on BC post (centre pillar)
1	Behind facia panel on right-hand side
1	Lower part of left-hand BC post (centre pillar)
3	Header rail behind rear view mirror
6	Right-hand wing valance in engine compartment
4	Left-hand wing valance in engine compartment
1	Under facia panel behind ignition switch
3	Engine compartment behind insulation at left-hand bulkhead grommet
1	Rear of boot floor at left-hand side

SUPER SNIPE SERIES V ESTATE, INCLUDING POLICE ESTATE

NEGATIVE EARTH WIRING DIAGRAM from Chassis Number B.084600001

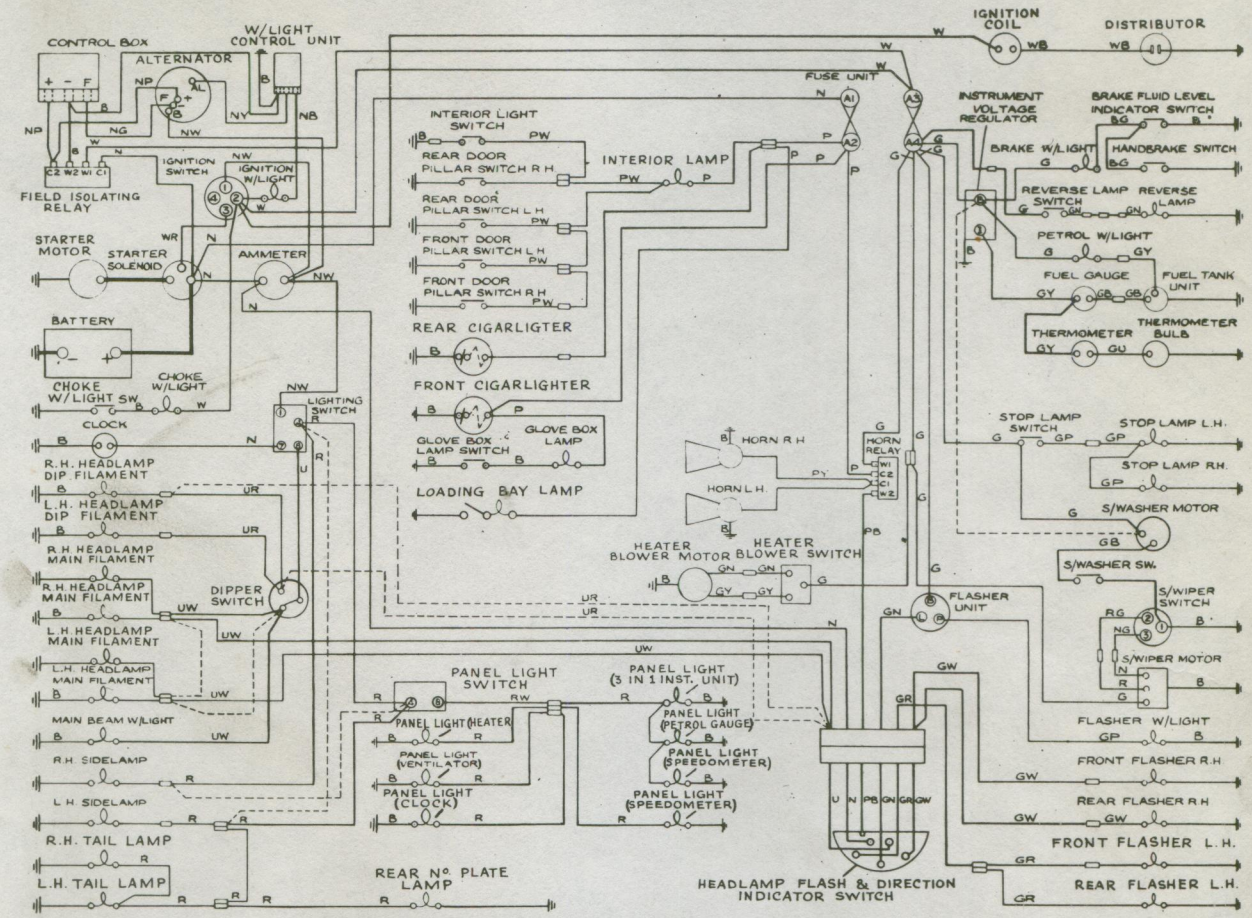

COLOUR CHART	
R	RED
Y	YELLOW
G	GREEN
U	BLUE
N	BROWN
P	PURPLE
W	WHITE
B	BLACK

NOTE – CIGARLIGHTERS, CLOCK AND GLOVEBOX LAMP, NOT FITTED ON POLICE CARS.
ADDITIONAL PANEL LIGHT FOR SPEEDOMETER FITTED ON POLICE CARS ONLY.

CODE	
------	ALTERNATIVE WIRING FOR LEFT HAND DRIVE MODELS.
—⊂—	SNAP CONNECTOR.
B	EARTH VIA. CABLE.
—⊥—	EARTH VIA. BOLT.

8539

A LIST OF SNAP CONNECTOR LOCATIONS IS SHOWN OVERLEAF

IMPERIAL

NEGATIVE EARTH WIRING DIAGRAM from Chassis Number B.884400001

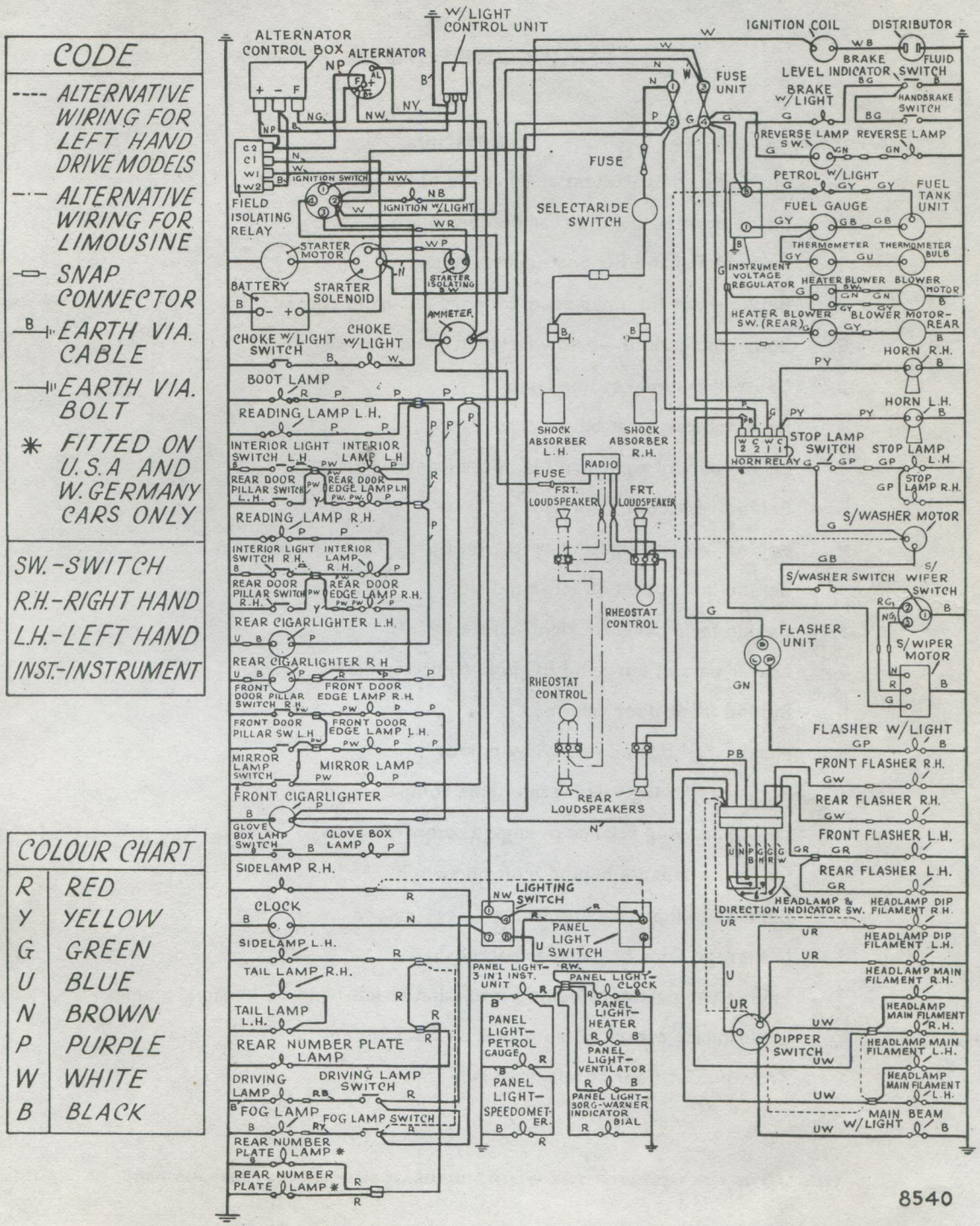

A LIST OF SNAP CONNECTOR LOCATIONS IS SHOWN OVERLEAF

IMPERIAL

Negative Earth System

SNAP CONNECTORS

Quantity	Location
4	In engine compartment at left-hand bulkhead grommet
1	Inside boot lid behind rear number plate
1	Top of left-hand BC post (centre pillar)
3	Behind boot lid inner panel forward left-hand corner
9	Body connections—below facia left-hand side
2	Cantrail behind reading lamp
4	Rear door armrest below cigar lighter
2	Lower part of right-hand BC post (centre pillar)
6	Behind rear door trim pad
4	Behind interior lighting switch on BC post (centre pillar)
1	Behind facia panel on left-hand side
1	Behind facia panel on right-hand side
2	Lower part of left-hand BC post (centre pillar)
4	Behind front door trim pad
3	Header rail behind rear view mirror
6	Right-hand wing valance in engine compartment
4	Left-hand wing valance in engine compartment
1	Under facia panel behind ignition switch
2	Behind auxiliary driving lamps
1	In luggage boot below rear parcel shelf
3	Engine compartment behind insulation at left-hand bulkhead grommet
1	Underneath centre of front seat on floor tunnel
1	Rear of boot floor at left-hand side

THIS LIST IS FOR USE WITH THE WIRING DIAGRAM SHOWN ON PREVIOUS PAGE

BODY

CONTENTS

Pages 1—26

	Page
UNDERFRAME DIMENSIONS	3
WINDSCREEN	4
BACKLIGHT	6
SIDE WINDOWS	7
INTERIOR DOOR HANDLES	7
TRIM PADS	8
WINDING WINDOWS	8
NO-DRAUGHT VENTILATOR	9
FRONT SEAT	10
FRONT SEAT SQUAB	17
ASHTRAY	17
ARMRESTS	17 and 18
REAR SEAT CUSHION	17
REAR SEAT SQUAB	18
HEADLINING	18
DOORS	19
DOOR LOCKS	20
EXTERIOR DOOR HANDLES	21

	Page
STRIKER UNIT	22
GLOVE BOX LID LOCK	22
WINDOW REGULATORS	22
BONNET	23
BONNET LOCK	23
AIR VENTILATOR	23
BOOT LID	24
BOOT LID LOCK	24
GRILLE ASSEMBLY	24
BUMPERS	25
BODY MOULDINGS	26
NAME BADGES	26
PARTITION GLASS	17, 26, 27

PRINCIPAL UNDERFRAME DIMENSIONS

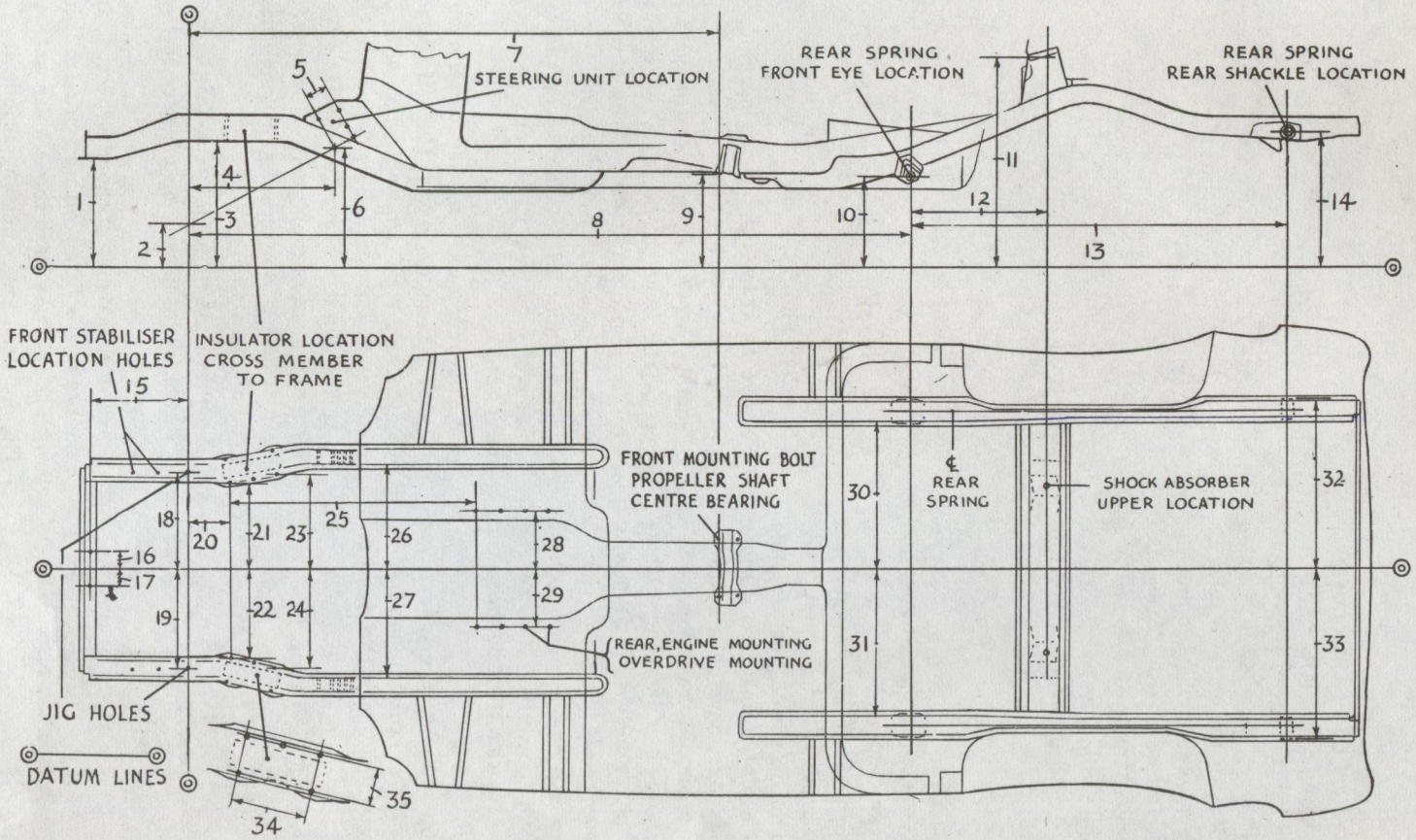

1.— 13·5" (34·29 c.m.)
2.— 5·0" (12·7 c.m.)
3.— 15·81" (40·16 c.m.)
4.— 18·96" (48·16 c.m.)
5.— 3·12" (7·925 c.m.)
6.— 15·01" (38·12 c.m.)
7.— 70·71" (179·60 c.m.)
8.— 96·84" (245·97 c.m.)
9.— 11·53" (29·29 c.m.)
10.— 11·30" (28 70 c.m.)
11.— 26·94" (68·43 c.m.)
12.— 17·74" (45·06 c.m.)
13.— 50·25" (127·63 c.m.)
14.— 17·0" (43·18 c.m.)
15.— 13·16" (33 426 c.m.)
16-17.— 2·20" (5·588 c.m.)
18-19.— 13·0" (33·02 c.m.)
20.— 5·37" (13·64 c.m.)
21-22.— 11 74" (29·82 c.m.)
23-24.— 12·68" (32·21 c.m.)
25.— 32·77" (83·24 c.m.)
26-27.— 13·75" (34·93 c.m.)
28-29.— 8·88" (22·55 c.m.)
30-31.— 19·25" (48·89 c.m.)
32-33.— 21·87" (55·55 c.m.)
34.— 6·50" (16·51 c.m.)
35.— 3·0" (7·62 c.m.)

WINDSCREEN
(All models)

The services of two operators are necessary to carry out the removal and refitting operations, one working from inside the car and one from the outside. The windscreen is located and retained in position by means of the rubber weatherstrip around its periphery. No other form of fixing is used, but the contacting surfaces are treated with "Seelastik" sealing compound during assembly.

"Seelastik" is obtainable from Messrs. Expandite Products Ltd., Cunard Road Works, London, N.W.10, England.

To remove

Remove wiper arms.

Remove interior rear view driving mirror, sun visors and the windscreen capping.

To release the weatherstrip from the inner and outer contacting surfaces of the body, the "Seelastik" seal formed during the original assembly must be broken. The use of a small screwdriver from which all the sharp edges have been removed is recommended. Care should be taken when drawing this tool around and under the weatherstrip to keep the tip firmly under the lip, otherwise damage to paintwork may result.

Apply hand pressure to one of the lower corners and force the windscreen outwards. The second operator (outside the car) can then support the glass as it is released.

Remove the beading by releasing the four cover plates at the upper and lower corners, and freeing the beading from the retaining lips in the weatherstrip.

Remove the weatherstrip from the glass.

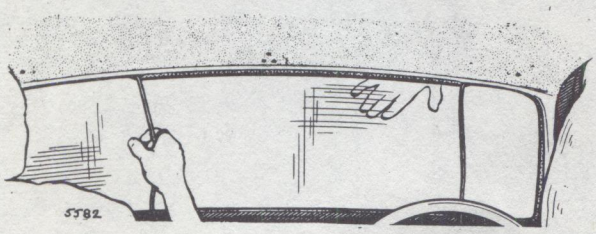

Fig. 1. *Windscreen refitting*

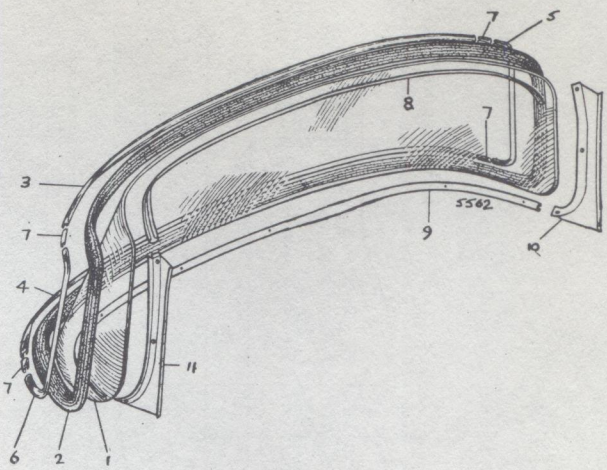

Fig. 2. *Components of windscreen assembly*

1. GLASS
2. WEATHERSTRIP
3. BEAD, TOP
4. BEAD, BOTTOM
5. BEAD, O/S
6. BEAD N/S
7. COVER PLATE
8. CAPPING, TOP
9. CAPPING, BOTTOM
10. CAPPING, SCREEN PILLAR O/S
11. CAPPING, SCREEN PILLAR N/S

To refit (Fig. 1)

Remove all traces of old sealing compound from the glass and weatherstrip.

Assemble the weatherstrip to the glass, starting at one of the lower corners and ensuring that the weatherstrip fits squarely at the corners and that the inner lip is flush with the glass.

Apply a ribbon of "Seelastik" to the faces of the weatherstrip which come into contact with the glass.

For this operation a special gun is available from Messrs. Expandite Ltd., Cunard Road Works, London, N.W.10, England, who also supply full instructions for operating the gun. In the absence of such a gun it is suggested that an adaptor in the form of a piece of piping with a flattened end could be fitted to a lubrication gun which has a screw-type plunger.

The glass must be completely clean before applying "Seelastik", otherwise an effective seal will not be obtained.

Smear the channels of the weatherstrip into which the beading is fitted with a soft soap solution, and with the aid of a small tool similar to that shown in Fig. 4, fit the lower beading as follows.

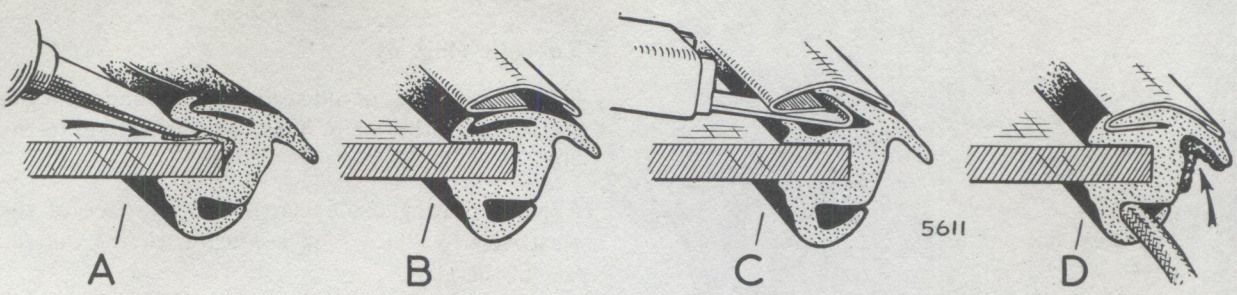

Fig. 3. *Method of fitting chrome beading*

Offer the beading onto the weatherstrip, and, starting at the centre, use the hooked end of the tool to lift the lip of the weatherstrip into the turned over section of the bead. Pressing the tool into the weatherstrip, slide it round the bead. Fit the top beading in exactly the same manner as the lower.

Fit the cover plates to the side beads and fit the side beads to the weatherstrip by starting at the centre first.

Cut a piece of strong cord of a length considerably greater than the periphery of the glass. The use of thin string should be avoided as this will cut the rubber.

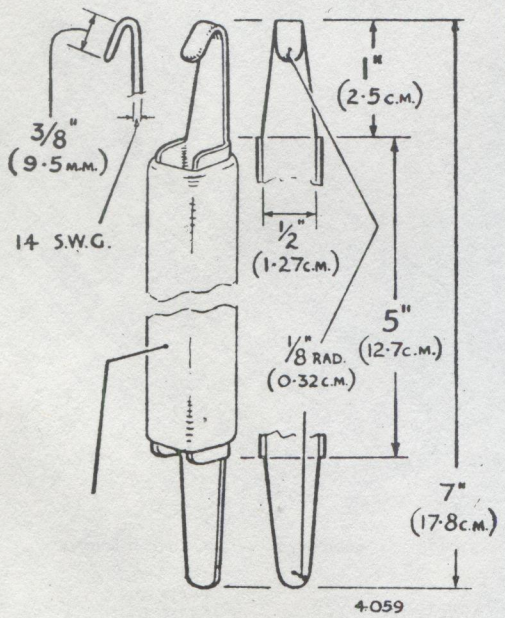

Fig. 4. *Dimensions of special tool*

Insert the cord into the inner channel of the rubber (Fig. 5) with the aid of a piece of small diameter pipe through which the cord passes, so that loose ends are near to the centre of the upper edge.

Ensure that the flange of the aperture in the body is clean and free from grease.

Apply a coating of "Seelastik" to the outer channel of the rubber weatherstrip which is to be in contact with the flange of the aperture in the body.

Carefully align the windscreen assembly to the body aperture, and after passing the ends of the cord into the interior of the car, press the windscreen into the aperture from the exterior of the car.

Starting at the top, work the lip of the weatherstrip over the flange by pulling the ends of the cord. Pull out this cord completely. Some pressure must be exerted on the glass during this operation, particularly at the corners.

Carefully remove any surplus sealing compound with a rag slightly dampened with petrol or white spirit.

Refit windscreen capping, sun visors, rear view interior mirror and the wiper arms.

Fig. 5. *Inserting cord into weatherstrip*

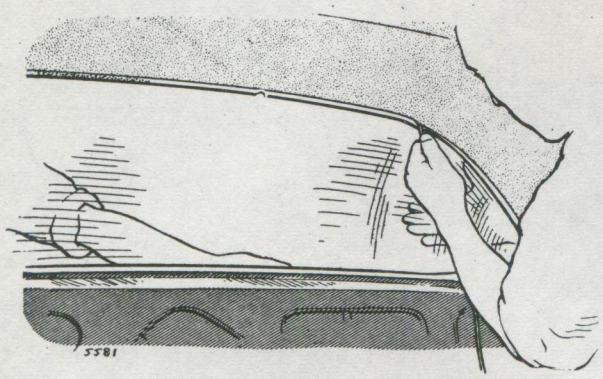

Fig. 6. *Backlight refitting*

BACKLIGHT

(Saloon and Limousine)

The services of two operators are needed to carry out the removal and refitting operations, one working on the inside and one on the outside of the car. The glass is located by means of the rubber weatherstrip around its periphery only. No other form of fixing is used but the contacting surfaces are treated with "Seelastik" sealing compound during assembly. The backlight is removed by pressing it outwards from the interior of the car. In order to do this it will be necessary to break the seal of the "Seelastik" compound between the rubber weatherstrip and the backlight aperture.

To remove

To release the lip of the weatherstrip from the surface of the rear panel, the "Seelastik" seal formed during original assembly must be broken.

This is done by inserting the tip of a screwdriver blade in a similar manner to the instructions under "Windscreen".

Apply hand pressure to the glass from inside the car, and force the glass complete with weatherstrip outwards. The second operator (outside the car) can then support the glass as it is released.

Remove the weatherstrip from the glass.

To refit (Fig. 6)

Remove all traces of old sealing compound from the glass and weatherstrip. Fit the weatherstrip to the glass.

Apply a coating of "Seelastik" to the face of the weatherstrip which is in contact with the outside face of the glass.

Commencing at the centre offer the lower beading to the weatherstrip leaving approximately $\frac{3}{8}$ in. (9·5 mm.) at the ends from the corner of the weatherstrip to allow for creep during fitting.

Fit the top bead in a similar manner to the lower.

Fit the lower corner piece to the bottom bead following with the top corner to the side bead. Now fit the combined top corner and side bead into the lower corner piece, and finishing by fitting the top corner piece into the upper bead.

All the beadings are retained by lips formed in the rubber and are secured by the use of the special tool (Fig. 4).

Tap the corner pieces into position so that there

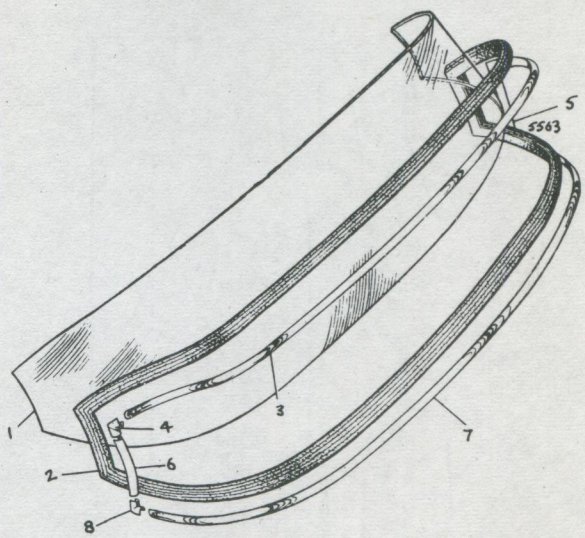

Fig. 7. *Components of backlight assembly*

1. GLASS
2. WEATHERSTRIP
3. UPPER BEAD
4. UPPER CORNER PIECE
5. BEAD, O/S
6. BEAD, N/S
7. LOWER BEAD
8. LOWER CORNER PIECE

is no buckling or distortion of the weatherstrip throughout its length.
Cut a piece of strong cord of length considerably greater than the periphery of the glass. The use of thin string should be avoided as this will cut the rubber.
Insert the cord into the inner channel of the sealing rubber (Fig. 5) so that the loose ends are near to the middle of the upper edge.
Ensure that the aperture in the body is clean and free from grease.
Apply a coating of "Seelastik" to the outer channel of the rubber weatherstrip which is to be in contact with the flange of the aperture in the body.
Allow the two ends of the cord to hang on the inner side of the glass.
Press the assembly into the aperture from outside the car and work the inner lip of the weatherstrip over the flange of the aperture by pulling the ends of the cord.
Pull out cord completely.
If the outer lip of the weatherstrip becomes folded under itself, work it free with a small screwdriver.

TAIL-GATE WINDOW
(Estate Car)
To remove

With the tail-gate window in the open position and suitably supported, remove the hinges and side props and take off the complete window assembly.
On a suitable bench, covered with felt to prevent any scatching of the glass, remove the window by first dismantling the weatherstrip from the chrome frame.
Take off the clip (by prising up its ends) from each outer top corner of the frame.
From the inner corners at the top of the frame, remove the screws and dome nuts and take the top rail off the frame.
The glass complete with its glazing strip can now be removed from the frame.

To refit

Reverse the above procedure using "Seelastik" to seal the glazing strip to the glass.

FIXED SIDE WINDOWS
(Estate Car)
To remove

Open the tail-gate window and lower the tail-board.
Remove the chrome moulding at the rear end of the window.
From inside the car take off the front, top and bottom cappings from around the window.
Commencing at the top edge of the glass and working from the inside, lever the lip of the weatherstrip over the flange of the aperture in the body, at the same time hand pressure must be applied to the glass.
A piece of wedge-shaped wood, or a screwdriver from which all sharp edges have been removed may be used as a lever.

To refit

Apply a coating of "Seelastik" to the channel in the body aperture. Assemble the rubber to the glass in a similar manner to the windscreen.
Cut a piece of strong cord of a length considerably longer than the periphery of the glass. The use of thin string should be avoided as this will cut the rubber.
Insert the cord into the inner channel of the sealing rubber so that the loose ends are near to the upper edge.
Allow the two ends of the cord to hang on the inner side of the glass, and press the assembly into the body aperture from the exterior of the car.
Work the inner lip of the weatherstrip over the flange of the body aperture by pulling the ends of the cord.
Pull out the cord completely.
From inside the car, replace the top, bottom and front cappings.
From outside the car, replace the chrome moulding at the rear end of the window.

INTERIOR DOOR HANDLES
(All models)
To remove

Turn the base so that the radial groove in its face is parallel with the dowel hole in the handle. This will expose the retaining pin.

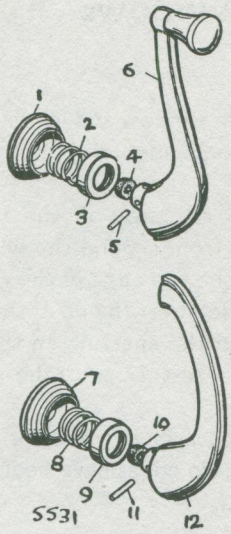

Fig. 8. *Interior door handles*

1. BASE } ESCUTCHEON
2. SPRING } ESCUTCHEON
3. CROWN } ESCUTCHEON
4. RUBBER PAD
5. PIN
6. HANDLE, WINDOW
7. BASE } ESCUTCHEON
8. SPRING } ESCUTCHEON
9. CROWN } ESCUTCHEON
10. RUBBER PAD
11. PIN
12. HANDLE, LOCK

With an awl, tap out the pin securing the handle to its spindle. Remove the handle followed by the crown, spring and base.

To refit

Slide the base on to its spindle, following with the spring and crown.
Slip the handle on to its spindle, matching its position with the handle on the opposite door.
Insert the pin into the hole in the handle shank. When the pin locates with the hole in the spindle, force it home, and allow the base to return over the handle shank.
Repeat the procedure with the other handle, ensuring that both are in the same positions as the opposite door.

TRIM PAD
(All models)

Remove interior door handles.
The trim pads are attached to the door panel by spring-in clips only down their sides.

Release these clips down the sides of the trim pad using a broad bladed knife or screwdriver, then bow the centre portion of the pad away from the door. This will enable the retainers at the top of bottom edges to be disengaged and the trim pad withdrawn.
Reverse these instructions when refitting.

WINDING WINDOW, FRONT DOOR—

To remove (Figs. 9 and 10)

(All models)

Remove interior handles and trim pad. This will reveal cloth coverings on the inside door panel.

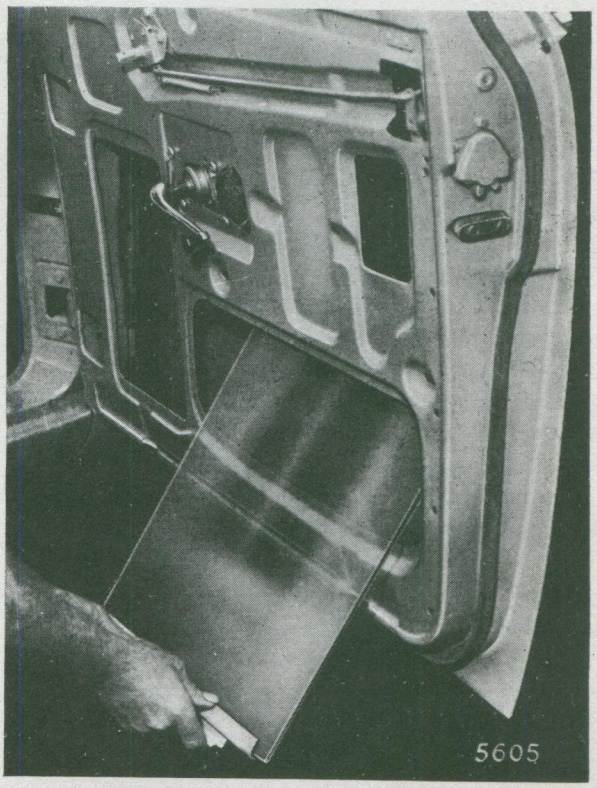

Fig. 9. *Removing or refitting front door winding window*

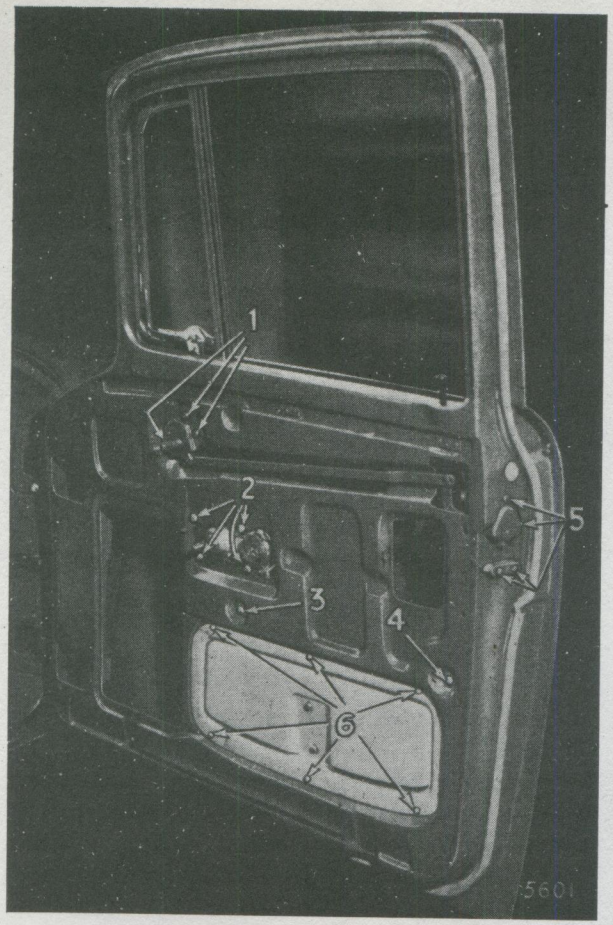

Fig. 10. *General view of front door with trim pad removed*

From the lower part of the door, take out six screws (6) and remove the combined window bottom stop, and the window removal aperture panel.

Remove two screws (3 and 4) securing the lower end of glass run channels.

Lower the glass to the full extent of its travel and disengage it from the operating arm.

Lightly spring the lower ends of the glass run channels outwards and remove the glass from the channels and out of the lower aperture in the door panel.

WINDING WINDOW, FRONT DOOR—To refit

(All models)

Enter the glass through the lower aperture in the door panel and slide it into the glass run channels.

Engage the channel on the bottom of the glass into the operating arm.

Secure the lower ends of the glass run channels with their retaining screws.

Fit the combined bottom stop bracket and aperture panel and secure with its screws after first applying "Seelastik" to the jointing surfaces.

Replace trim pad and interior handles.

NO-DRAUGHT VENTILATOR—To remove and refit

(All models)

Remove winding window.

Remove felt anti-rattle strips by easing their clips downwards with a screwdriver. Withdraw retaining screws on the glass run channel. Remove both glass run channels, taking care not to kink the channelling.

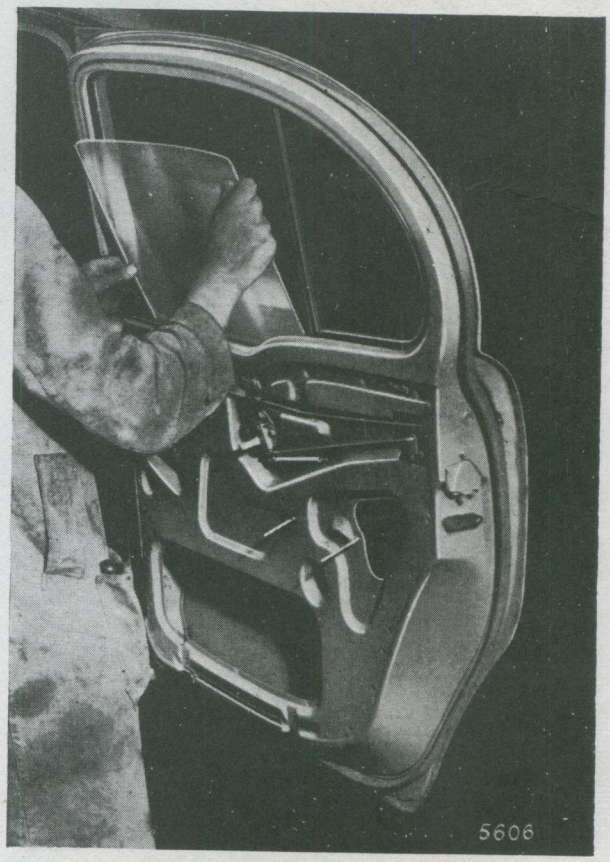

Fig. 11. *Removing or refitting rear door winding window*

The no-draught ventilator is held by one screw at its upper hinge. With the removal of this screw the ventilator may be withdrawn by easing out the lower swivel bracket from its location in the door. Refit in reverse order.

WINDING WINDOW, REAR DOORS—To remove and refit (Figs. 11 and 12)
(All models)

Remove interior door handles and trim pad. This will reveal cloth coverings on the inside door panel.
From the lower part of the door, take out six screws (6) and remove the combined window bottom stop, and the aperture closing panel.
Remove the felt anti-rattle strips by easing them down with a screwdriver.
Remove the front and rear glass run channels.
Lower the glass to its lowest position and release from its operating arm.
Turn the glass through 90° inside the door so that its upper edge becomes the forward edge.
Lift the glass up and out through the window aperture.
To remove the fixed glass, grasp it firmly at the rear top edge and pull towards the winding window opening. This glass is retained in position by the glass run channels of the winding window.
When refitting, reverse these instructions.

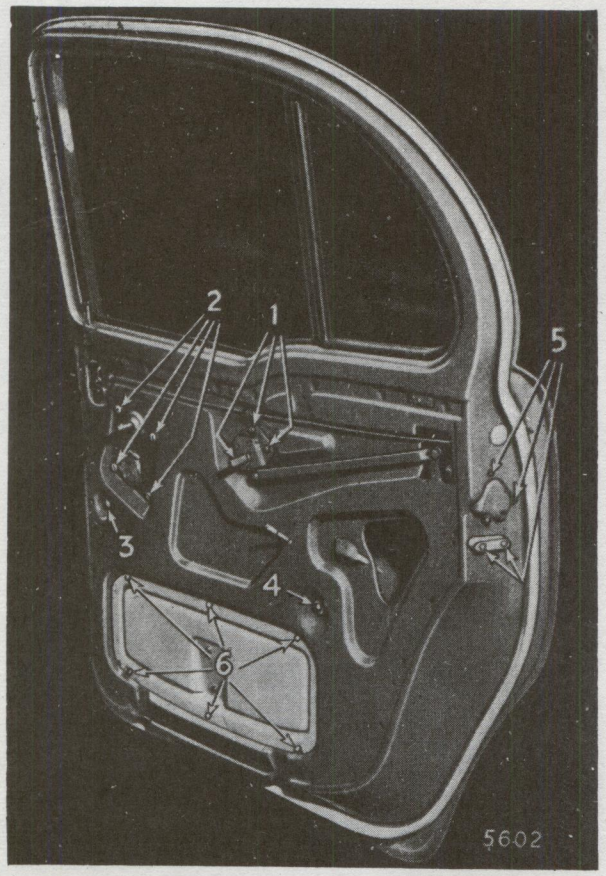

Fig. 12. *General view of rear door with trim pad removed*

FRONT SEAT (Bench Type)—To remove and refit
(All models)

Disconnect the seat position adjusting cable from the seat frame by removing the bolt in the control lever bracket.
Remove four bolts (two each side) with their respective washers and nuts from the seat support frame.
The seat assembly is now free to be removed from the car.
Refitting is a reversal of the above instructions except that instead of using the original spring washer on the seat slide bolts, use lock washers (Part No. 9664163) to prevent the seat working loose in service.

FRONT SEAT (Bucket Type)—To remove and refit
(All models)

Both the driver's and passenger's seats are retained in the same manner as the bench type seats and should be removed in exactly the same fashion.
When refitting the seat mechanism to the frame use lock washers (Part No. 9664283) under the bolt heads to prevent them working loose.

FRONT SEAT CUSHION (Bench Type)—To remove and refit

Simply lift the cushion assembly from the seat frame.
When refitting, make sure the rear edge is pushed fully home.

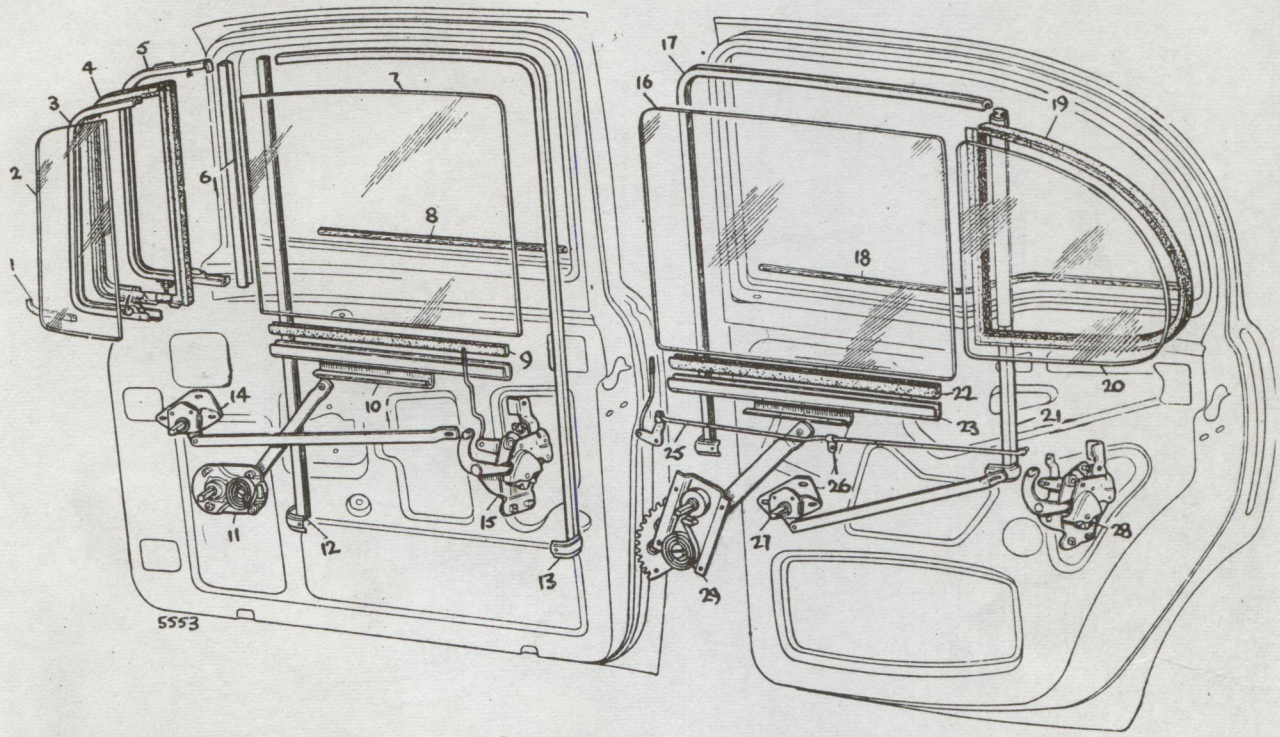

Fig. 13. *Door glasses and mechanism (Saloon and Limousine)*

1. DRAIN CHANNEL
2. GLASS
3. INNER FRAME
4. WEATHERSTRIP
5. OUTER FRAME
6. CENTRE CHANNEL
7. LIFTING GLASS
8. SEALING STRIP
9. GLAZING RUBBER
10. GLASS CHANNEL AND CAMPLATE
11. WINDOW REGULATOR
12. GLASS RUN CHANNEL
13. GLASS RUN CHANNEL
14. REMOTE CONTROL
15. DOOR LOCK
16. LIFTING GLASS
17. GLASS RUN CHANNEL
18. SEALING STRIP
19. WEATHERSTRIP
20. FIXED GLASS
21. GLASS RUN CHANNEL
22. GLAZING RUBBER
23. GLASS CHANNEL AND CAMPLATE
24. WINDOW REGULATOR
25. LOCKING CONTROL
26. CLIP, LOCKING CONTROL TO SILL
27. REMOTE CONTROL
28. DOOR LOCK

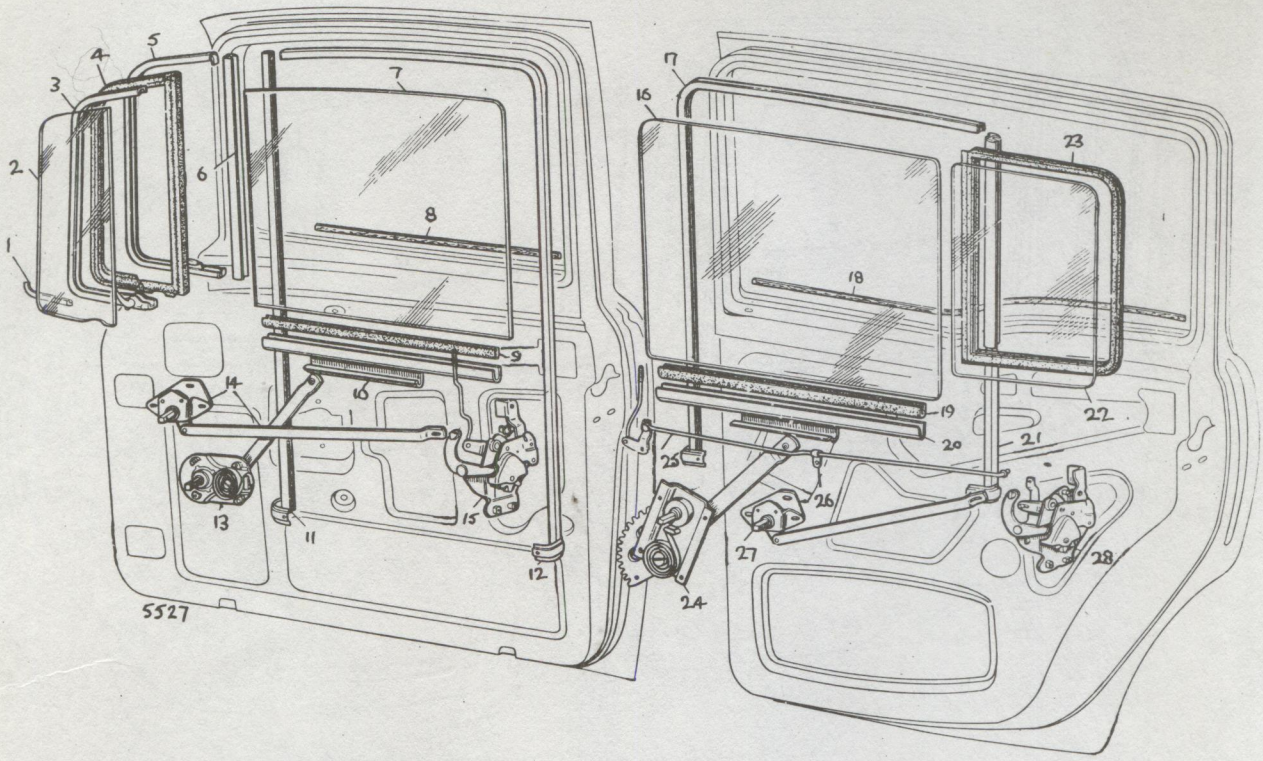

Fig. 14. *Door glasses and mechanism (Estate Car)*

1. DRAIN CHANNEL
2. GLASS
3. INNER FRAME
4. WEATHERSTRIP
5. OUTER FRAME
6. CENTRE CHANNEL
7. LIFTING GLASS
8. SEALING STRIP
9. GLAZING RUBBER
10. GLASS CHANNEL AND CAMPLATE
11. GLASS RUN CHANNEL
12. GLASS RUN CHANNEL
13. WINDOW REGULATOR
14. REMOTE CONTROL
15. DOOR LOCK
16. LIFTING GLASS
17. GLASS RUN CHANNEL
18. SEALING STRIP
19. GLAZING RUBBER
20. GLASS CHANNEL AND CAMPLATE
21. GLASS RUN CHANNEL
22. FIXED GLASS
23. WEATHERSTRIP
24. WINDOW REGULATOR
25. LOCKING CONTROL
26. CLIP, CONTROL TO SILL
27. REMOTE CONTROL
28. DOOR LOCK

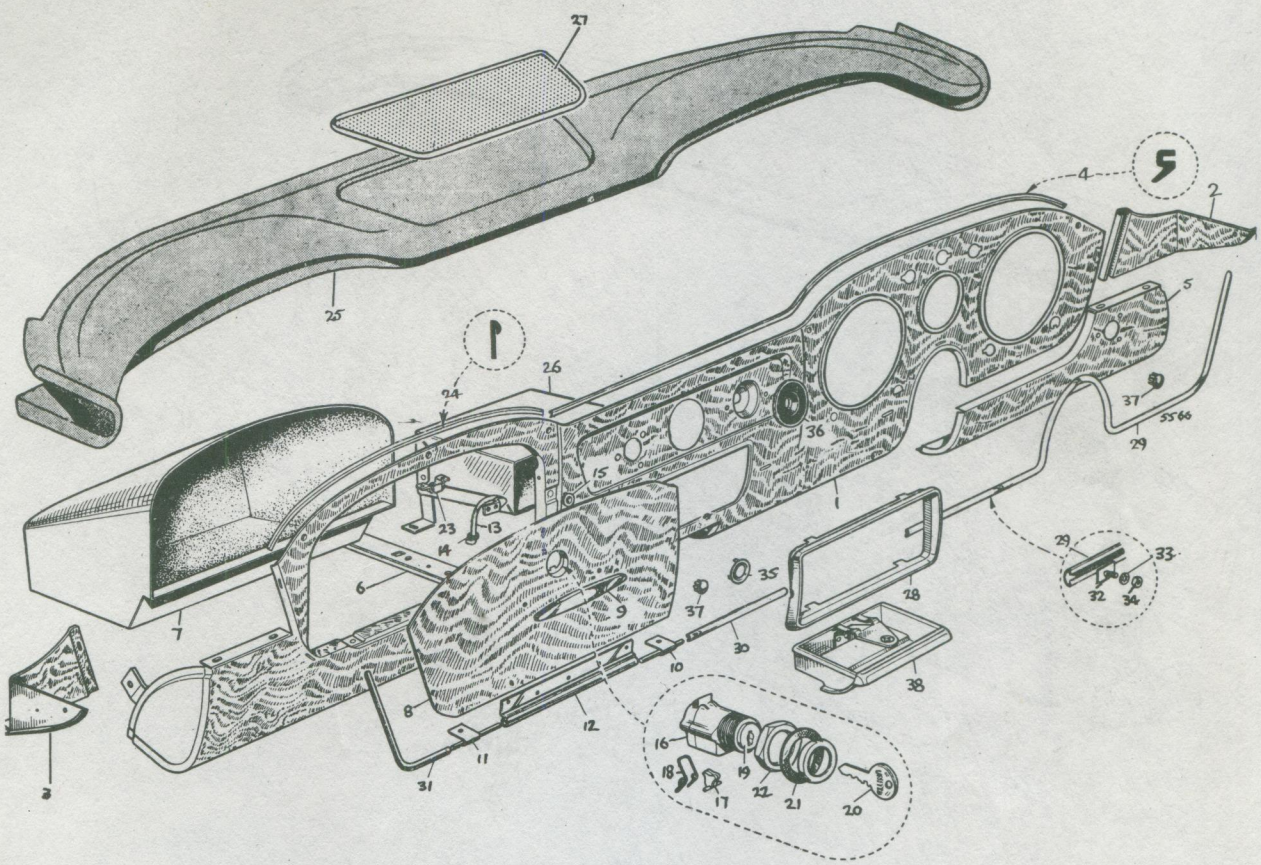

Fig. 15. *Facia panel (metal)*

1. FACIA PANEL
2. END PANEL
3. END PANEL
4. SEAL
5. LOWER FACIA
6. SUPPORT BRACKET
7. GLOVE BOX
8. LID, GLOVE BOX
9. PULL, GLOVE BOX
10. HINGE, OUTER
11. HINGE, OUTER
12. HINGE, CENTRE
13. QUADRANT
14. GROMMET
15. ESCUTCHEON
16. LOCK
17. BELL CRANK LEVER
18. SPRING
19. CYLINDER LOCK
20. KEY
21. FIBRE WASHER
22. NUT
23. STRIKER PLATE
24. SEAL
25. CRASH ROLL
26. CUBBY BOX
27. SPEAKER GRILLE
28. CUBBY BOX SURROUND
29. MOULDING
30. MOULDING
31. MOULDING
32. SCREW
33. WASHER, SHAKEPROOF
34. NUT
35. PLUG
36. BEZEL, LAMP SWITCH
37. PLUG
38. ASHTRAY

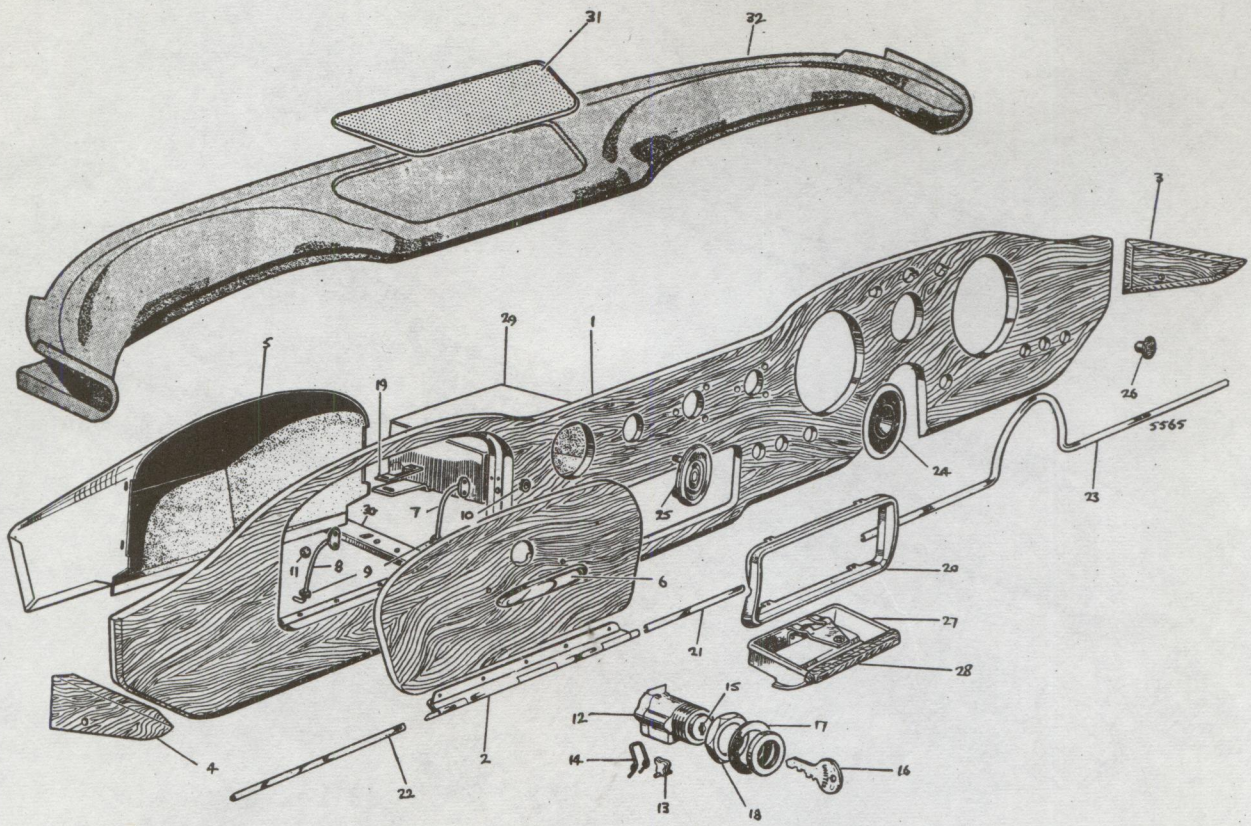

Fig. 16. *Facia panel (wood)*

1. FACIA PANEL
2. HINGE, GLOVE BOX LID
3. END CAPPING
4. END CAPPING
5. GLOVE BOX
6. PULL, GLOVE BOX
7. QUADRANT
8. QUADRANT
9. BUFFER
10. ESCUTCHEON
11. BUFFER, LID
12. LOCK
13. BELL CRANK LEVER
14. SPRING
15. CYLINDER LOCK
16. KEY
17. FIBRE WASHER
18. NUT
19. STRIKER PLATE
20. SURROUND, CUBBY BOX
21. MOULDING
22. MOULDING
23. MOULDING
24. BEZEL, LAMP SWITCH
25. PLUG
26. PLUG
27. ASH TRAY
28. PULL, ASH TRAY
29. CUBBY BOX
30. SUPPORT
31. SPEAKER GRILLE
32. CRASH ROLL

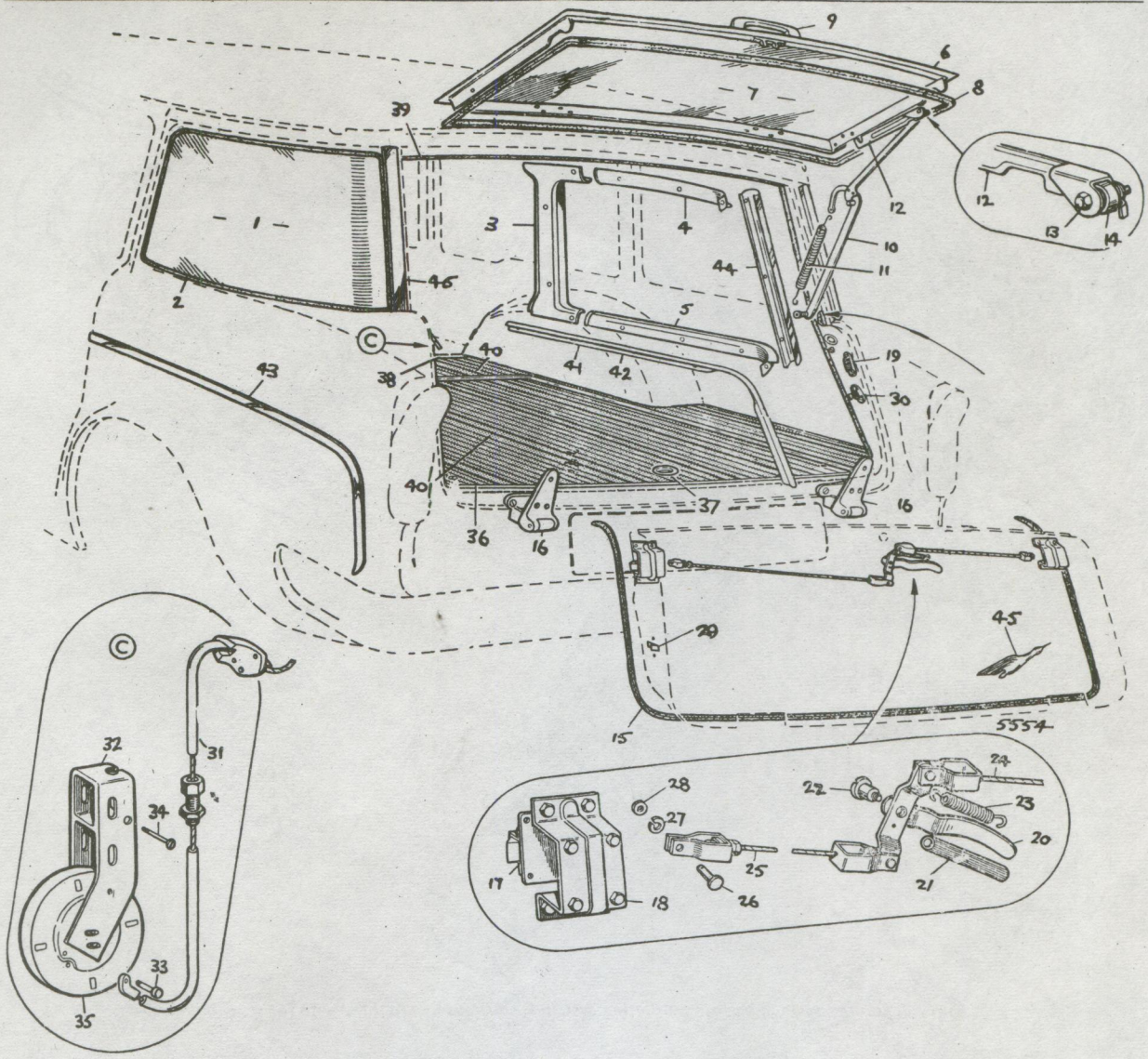

Fig. 17. *Rear end fittings (Estate Car)*

1. GLASS, QUARTERLIGHT
2. WEATHERSTRIP
3. CAPPING, FRONT
4. CAPPING, TOP
5. CAPPING, BOTTOM
6. BACKLIGHT FRAME
7. GLASS
8. WEATHERSTRIP
9. HANDLE
10. BACKLIGHT STAY
11. SPRING
12. STAY
13. NUT
14. SPRING
15. WEATHERSTRIP, TAILBOARD
16. HINGE
17. SIDE LOCK
18. SUPPORT BRACKET
19. STRIKER PLATE
20. HANDLE
21. PLASTIC COVER
22. SCREW
23. SPRING
24. CONTROL CABLE
25. CONTROL CABLE
26. CLEVIS PIN
27. WASHER, SPRING
28. WASHER, PLAIN
29. DOVETAIL
30. DOVETAIL
31. CABLE GUIDE
32. SUPPORT BRACKET
33. PIN
34. SCREW
35. CABLE DRUM
36. FINISHING STRIP
37. HANDLE
38. FINISHING STRIP
39. DRAUGHT HOSE
40. PLASTIC COVERING
41. TRIM RETAINER
42. TRIM RETAINER
43. WING MOULDING
44. MOULDING
45. MASCOT
46. MOULDING

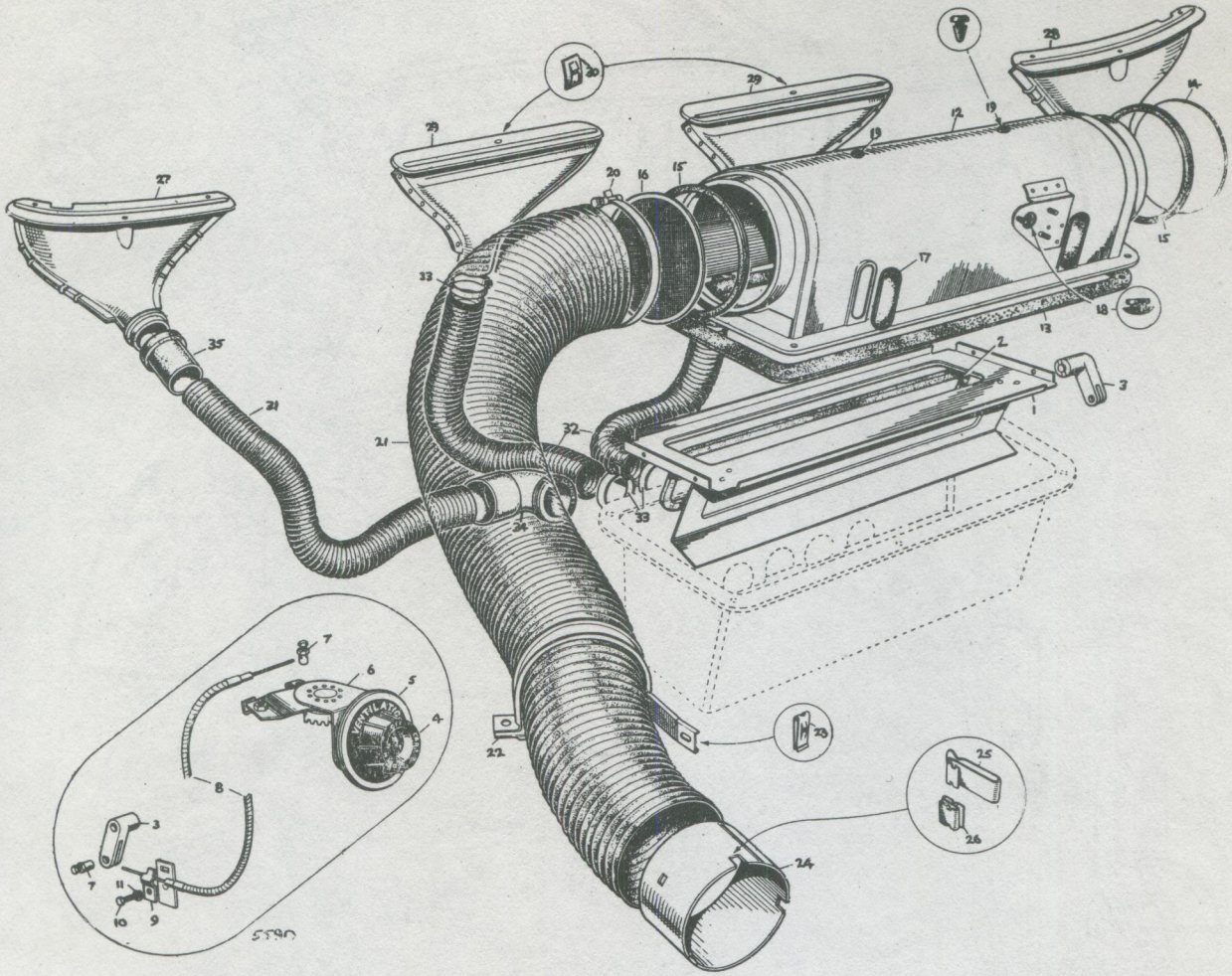

Fig. 18. *Components of the air ventilating system (Later models are fitted with facia vents)*

1. AIR DISTRIBUTION VALVE
2. SEAL
3. OPERATING LEVER
4. KNOB
5. BEZEL
6. FLAP CONTROL
7. TRUNNION
8. CONTROL CABLE
9. CABLE CLAMP
10. SCREW
11. WASHER
12. VENTILATOR HOUSING
13. GASKET
14. END CAP
15. GROMMET
16. FILTER GRILLE
17. GROMMET
18. GROMMET
19. GROMMET
20. CLIP
21. VENTILATOR DUCT
22. CLIP
23. SPIRE NUT
24. ADAPTOR
25. CLIP
26. CLIP
27. DEMISTER NOZZLE, O/S
28. DEMISTER NOZZLE, N/S
29. DEMISTER NOZZLE, CENTRE
30. SPIRE NUT
31. TUBE
32. TUBE
33. CLIP
34. OUTLET ELBOW
35. ADAPTOR

FRONT SEAT CUSHION AND SQUAB (Bucket Type)—To remove and refit

Remove the setscrews securing both the locking and non-locking quadrants (complete with cross-shaft) to the frame.
On Series III models cross-shafts are not fitted.
The cushion and squab are now free from each other.
Refit in reverse order.

FRONT SEAT SQUAB (Bench Type)—To remove

Remove the seat cushion.
Remove ashtray or ashtray assembly and table tops.
Release the two clips under the forward bottom edge and the ring clips at the lower ends of the side.
From the rear bottom edge, take out the screws and remove the squab from the frame.

ASHTRAY (FRONT SEAT SQUAB)—To remove

Disconnect the battery.
Pull down armrest and remove the two screws now revealed.
Gently ease the ashtray assembly from its location and disconnect the cigar lighter wiring.
On some cars, the armrest must be removed first to free the small trim pad which conceals the ashtray assembly retaining screws.
To remove one ashtray only, simply take out the screws from the respective bezel.
In either of the above instances, refitting is a reversal of the removal instructions.

TABLE TOP (FRONT SEAT SQUAB)—To remove

Partially open the table top and remove the four retaining setscrews to the squab frame.
Refit by reversing these instructions.

PARTITION GLASS (Limousine)

To remove brake (Fig. 19)

Remove two screws situated on line "B" from the outer end of each table recess.
Set lever (5) in horizontal position and remove top capping (1) by an upward and rearward action. Remove the two fixing screws (3) and detach lever. To detach rubber brake assembly remove the two screws (4). If the rubber brake block (6) is worn this should be replaced.

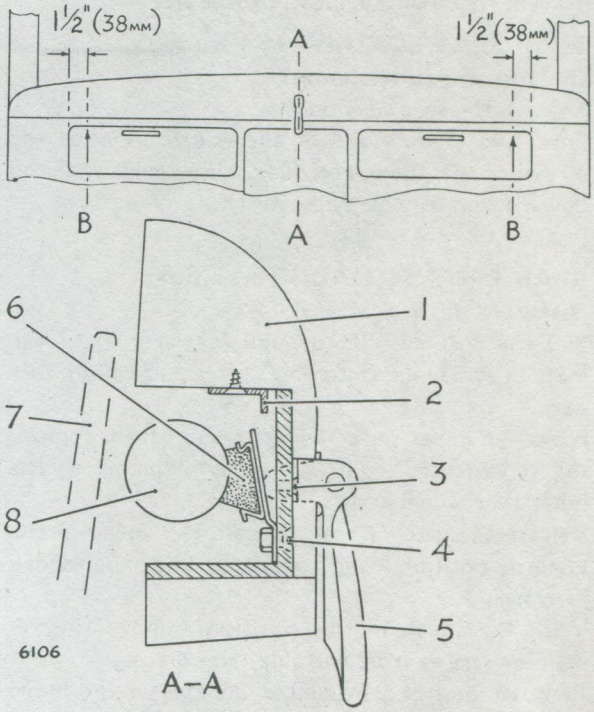

Fig. 19. *Partition brake details*

1. TOP CAPPING
2. BRACKET
3. SCREW
4. SCREW
5. OPERATING LEVER
6. BRAKE BLOCK
7. GLASS
8. SPRING BARREL

ARMREST (FRONT SEAT)—To remove

Remove the four setscrews which are exposed at the rear end when the armrest is in the partially opened position.

REAR SEAT CUSHION—To remove (Saloon and Limousine)

Simply lift up the forward edge of the cushion from its front retaining valance, whereupon the cushion can be removed.
Refit by reversing this operation.

REAR SEAT CUSHION—To remove (Estate Car)

Pull the seat cushion up and forward using the loop provided in the centre of the cushion rear edge.
Take out the screws from the hinges and side props on the underside of the seat pan, whereupon the seat is free and can now be removed.
To refit, reverse the above procedure.

REAR SEAT SQUAB—To remove (Saloon and Limousine)

Remove the seat cushion.
From the lower edge of the squab, remove the screws from their retaining clips, and with an upward movement remove the squab from its location.

REAR SEAT SQUAB—To remove (Estate Car)

Pull the seat cushion up and forward, using the loop provided in the centre of the cushion rear edge.
From the lower outer edges of the squab, remove the screws securing the small trim pieces to the inner rear wheel arch.
Release the catches which retain the squab in the normal position, and partially fold the squab forward.
With the squab in this position remove the remaining screws from the side trim pieces.
Remove the side trim pieces and release the hinge pin now exposed from each side of the squab.
Reverse these instructions when refitting.

ARMREST (DOOR)—To remove (All models where fitted)

From below the armrest remove the outer screws and take off the armrest.

Note

The two inner screws help to retain the trim of the armrest only. The other trim-retaining screws are exposed when the armrest has been removed.
Refit in the reverse order.

ARMREST (REAR SEAT)—To remove

When dealing with Estate Cars, the removal and refitting procedure will be as the front seat armrest.
For the Saloon and Limousine models, the squab must be removed first.
Now, partially lower the armrest and pull down the small trim pad at the rear of the armrest to gain access to the retaining screws.
Refitting is a reversal of these instructions.

HEADLINING—To remove (Saloon)

Disconnect the battery at the positive terminal.

Remove sun visors and rear view mirror.

Remove roof lamp assembly.

Remove the front seat.

Remove rear seat cushion and squab.

Release the draught welt from above all four doors, and down as far as the striker on the rear doors.

Remove the rear quarter trim panels and the upper half of the "B" and "C" post trim panel.

Release the forward edge of the rear parcel tray and lift out the tray.

Remove backlight glass.

Remove the clips securing the edges of the roof lining to the flanges of the door and backlight, and release the roof lining. All edges are secured to the flanges in production with adhesive solution.

The lining is now supported by the listing rails and the windscreen only. Remove the rearmost listing rail from the retaining clips located above the backlight glass.

Continue to release the remaining rails in turn by springing the lower edges inwards to release from the locating holes in the cantrails.

Finally remove the windscreen.

To refit

The services of two people are required to refit the lining. In order that the lining will conform to the shape of the inside of the roof, listing rails of different contours are used, the ends of which are coloured to aid identification, the position of which MUST be observed when removing the lining.

It will be noted that there are three alternative locating holes in the cantrail for the ends of each

listing rail. These holes accommodate any variations which may occur during the original making up of the lining.

Clean off all traces of old adhesive from the flanges of the doors, windscreen and backlight apertures.

Before fitting the new headlining, apply a suitable adhesive to the apertures and allow it to become nearly dry.

To refit the lining, reverse the removal procedure.

Note

BEFORE fitting all the lining, the windscreen must be fitted after attaching the front edge of the lining, otherwise, when pulling on the lining to remove the creases which occur while fitting, the front edge will be pulled out of position necessitating starting again.

The lining when fitted must be free from creases with no sagging occurring anywhere.

HEADLINING—To remove and refit

(Estate Car)

Disconnect the battery at the positive terminal.

Remove sun visors and rear view mirror.

Remove roof lamp assembly.

Remove the front seat, and fold down rear seat and squab.

Pull off the coloured draught welt from around the door and along the interior of the car. The welt is retained in position by clips which must be eased off the flanges otherwise damage may result when removing the welt.

Remove the upper half of the "B" and "C" post trim panel.

Remove the clips securing the lining to the cantrail.

Remove the rearmost listing rail, and, working forward, remove the remainder of the listing rails, noting the colours on their ends. Finally, remove the windscreen.

To refit, reverse the above instructions.

DOORS (All models)

Lubrication

Hinge pins and door locks must be lubricated at regular intervals.

From the commencement of Series II vehicles an oil hole is provided in the shut face of the door approximately on a line with the operating push-button of the exterior handle (Fig. 20). When not in use, the oil hole is sealed by a polythene grommet. (Part No. P.49120).

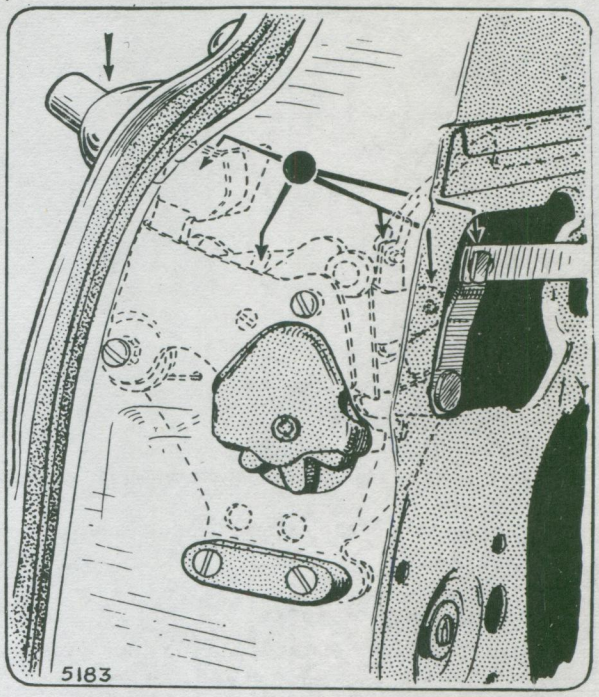

Fig. 20. *Door lock lubrication points (All models)*

For vehicles which do not have an oil hole provided reference should be made to Fig. 21 if an oil hole is desired.

When oiling the door locking mechanism the windows should be fully wound up, and after oiling, the doors should be left open for as long as possible, otherwise, since some oil is bound to be wasted, it may flow out of the drain holes and possibly into the interior of the car.

The wards of the lock should be lubricated by applying oil to the key which is then inserted into the lock in the normal manner.

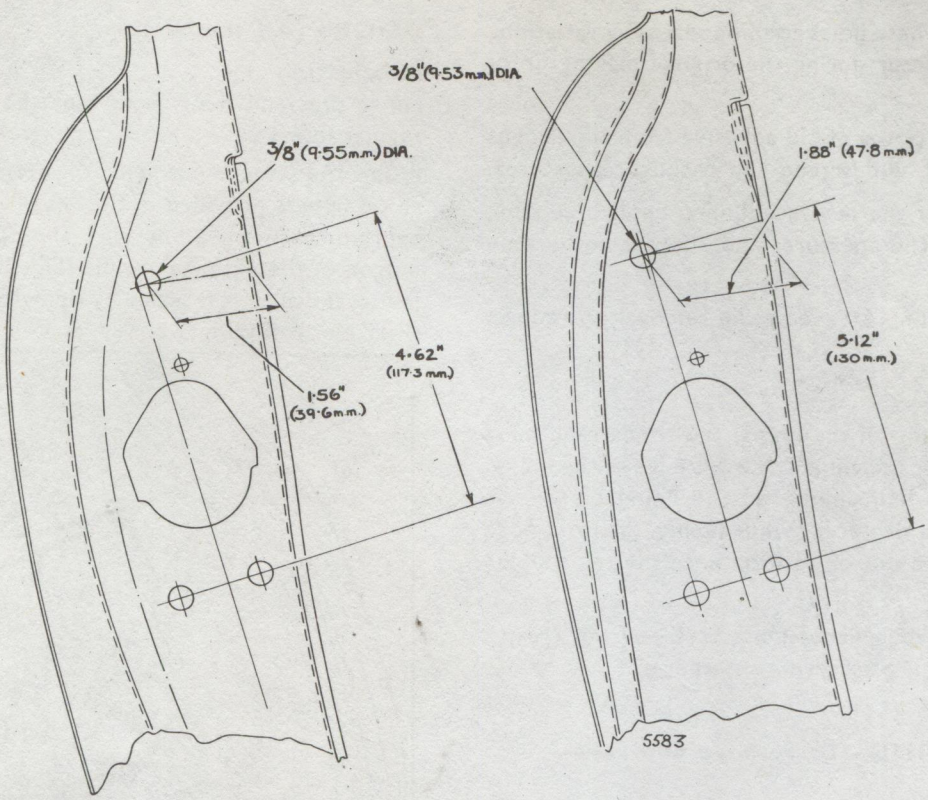

Fig. 21. *Drilling dimensions for lubrication hole. Rear and front door are shown respectively*

The push-button of the exterior handle is lubricated from the outside.

To adjust hang of doors

Remove hinge cover plates. Free the door weatherstrip around the vicinity of the door hinges.

Note

If hinges are adjusted, then the door lock striker plates must also be adjusted.

Adjustment of the doors is carried out by loosening off the bolts securing the hinges to the body, and moving the doors in the required direction, after which, the securing bolts must be re-tightened.

In order to raise or lower the door diagonally, packing pieces of the required thickness may be fitted between the hinges and their respective attachment points.

Refit weatherstrip and hinge cover plates.

If damage to the locks, the door components, and trim is to be avoided, the following dismantling instructions should be adhered to.

DOOR LOCKS—To remove

(All models)

Remove the interior trim.

Remove cloth covers if these are fitted.

Remove the securing screws which hold the remote control to the door and swing the unit and connecting link vertically downwards. In this position, the unit can be detached from its dowel on the operating lever. In some cases it will be found possible to turn this dowel with a pair of pliers thus by-passing the need to remove the remote control unit.

Remove the lock securing screws in the shut face of

the door, two of these screws also retain the dovetail.

On front doors, press the safety catch knob downwards into the locked position.

Unscrew the knob and swing the control wire down against the lock.

On rear doors, the safety catch is disconnected at the lock end.

The lock unit is now free to be removed through the lock aperture in the shut face of the door.

Reference can be made to Figs. 10 and 12 for the location of the above components.

To refit

Reverse the above instructions, except that when the remote control unit is fitted, slide the unit away from the lock until approximately $\frac{1}{32}$ in. (1 mm.) free movement is obtained. A small working clearance is essential for the correct functioning of the lock mechanism.

After successfully refitting the door locks and remote control, the safety catch controls should also be adjusted, the procedure of which is as follows.

Check that the catch wires do not foul their respective apertures, bending them if necessary.

Press the control knob downwards into the locked position, screw the knob home leaving a small clearance between the knob and the door sill to ensure that the full travel of the control is not restricted.

On rear doors, if the locking plunger is stiff in operation it will be found that the locking control rod is fouling the door panel.

To rectify, simply tap back the door panel at the point where the fouling occurs.

From Series III models onwards, a child safety locking device is fitted to all locks.

If it is required to adjust the child safety lock, the remote control should be allowed to take up its normal position as determined by its spring. The spring should take up any backlash in the linkage and load the remote control lever on the lock against its stop.

The change-over should have a feeling of firmness about it.

In the remote instances where an old type lock is fitted to a new type door (cars already in service), cover plates (Part No. 2215628 R/H and 2215629 L/H) are available to cover the exposed slot in the doors.

On doors which are fitted with the child safety lock, the slot width should be $\frac{5}{32}$ in. (4 mm.) wide to obviate the possibility of the lever jamming.

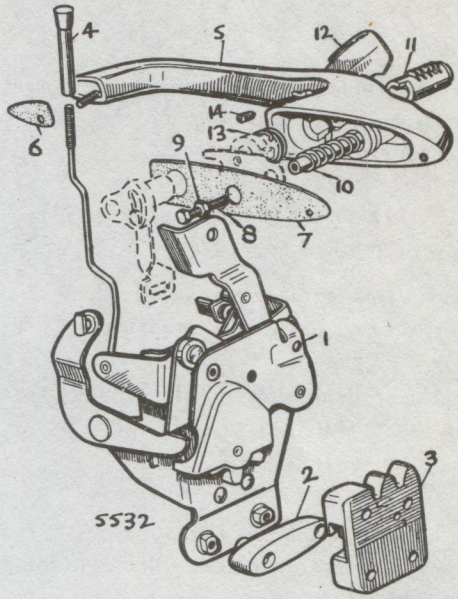

Fig. 22. *Components of the front door lock From Series III models a safety locking device is fitted*

1. LOCK
2. DOVETAIL
3. STRIKER
4. SAFETY CATCH
5. EXTERIOR HANDLE
6. WASHER
7. WASHER
8. SCREW
9. NUT
10. SPRING, PUSH BUTTON
11. CYLINDER LOCK
12. WEATHERSHIELD
13. SPRING, CENTRALISING
14. SPRING, WEATHERSHIELD

EXTERIOR DOOR HANDLE—To remove (All models)

Remove door trim.

Remove cloth covering from aperture on the door inner panel.

From inside the door casing disconnect the push button lock lever (shown dotted in Fig. 22) from the turn-buckle, then remove nut at front and screw at rear. Take care not to misplace the washers.

To adjust

On the reverse side of the push button is a plunger held by a locknut. The correct clearance between the plunger head and the lock contactor should be $\frac{1}{32}$ in. (1 mm.) and must be checked when the handle is attached to the door, through the large aperture in the inner door.

When adjusting, simply release the locknut and rotate the plunger bolt in or out as required, finally tightening the locknut.

To refit

Reverse the removal instructions, not forgetting the two seating washers between the handle and the door panel.

STRIKER UNIT—To remove (Fig. 23) (All models)

To disturb this component other than to fit a replacement or to make adjustments is not necessary.

Remove the securing screws (B). Screws (A) retain the lock in the shut face of the door.

To refit

Attach the striker unit to the door pillar, moving to the desired position before fully tightening the securing screws.

When fitted the unit should be at right angles to the door hinges.

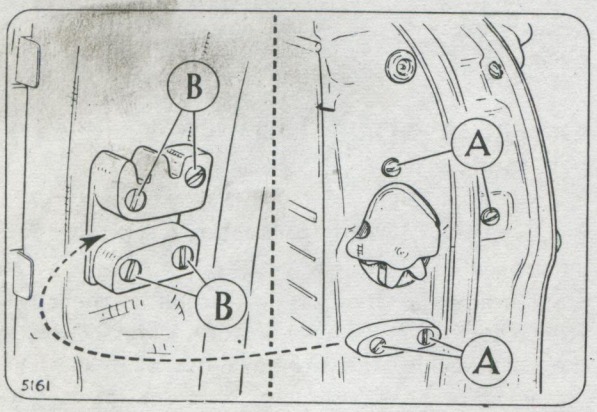

Fig. 23. *Lock striker unit*

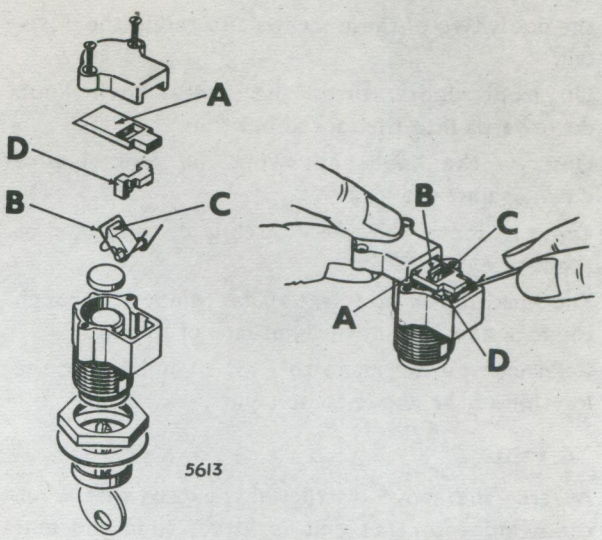

Fig. 24. *Assembly procedure for glove box lid lock*

GLOVE BOX LID LOCK (Fig. 24) (All models)

If this lock has been removed and dismantled for any purpose, the following assembly sequence is recommended.

Before fitting the bolt (A), the loop of the spring (B) and the leg of the bell crank lever (C) must both be located in the slot in the bolt.

The bridge piece (D) must now be pushed downwards and retained against the spring so that the bolt is in position over it. The outer cover can now be secured over the bolt by its two screws.

WINDOW REGULATOR—To remove (All models)

Remove interior trim.

Remove the cloth coverings from the inner door panel.

Temporarily replace window winding handle and lower window to approximately halfway down and support the glass.

Remove the screws securing the regulator to the inner door panel. Spring the operating arm from its location in the bottom channel of the glass and remove regulator from the door.

To refit

Reverse the above procedure.

Reference can be made to Figs. 10 and 12 for guidance as to the location of the components.

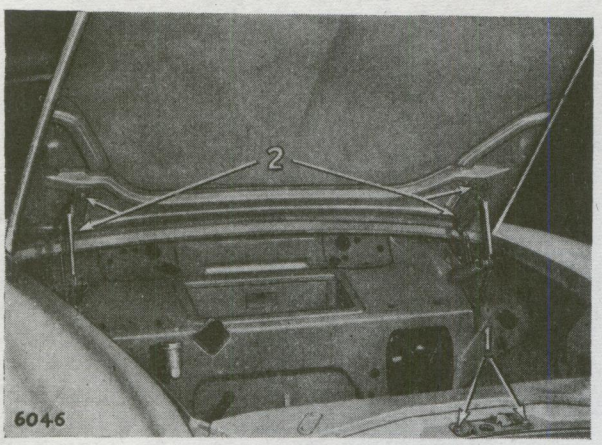

Fig. 25. *Bonnet attachment points*

BONNET—To remove (Fig. 25) (All models)

Support the bonnet lid with a suitable sling in the open position.

Remove the two setscrews with their respective washers (2) from each bonnet hinge, whereupon the bonnet is free to be removed.

Replacement is a reversal of the above instructions.

BONNET LOCK—To remove (All models)

Take out the two bolts with their spring and flat washers (1), (Fig. 25).

Gently ease the lock out of its aperture and release the operating cable.

To remove striker, undo the locknut from above the baffle into which the unit fits, and turn in an anti-clockwise direction by the screwdriver slot provided.

Replace both striker unit and lock by reversing the above procedure.

Adjustment of the striker is carried out by screwing in or out of the striker pin, finally locking up with the locknut.

When correctly adjusted, a slight movement is perceptible in the bonnet top when it is in the closed position.

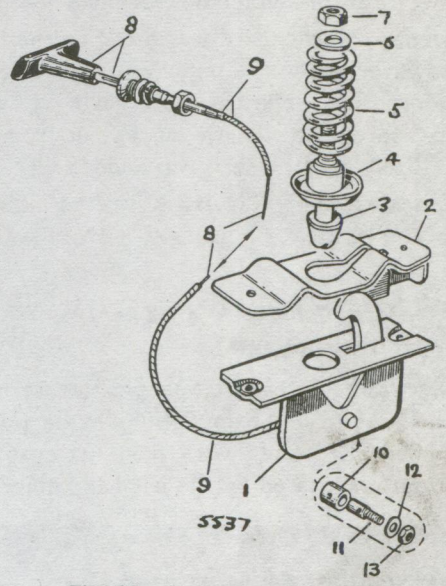

Fig. 26. *Components of bonnet lock*

1. CATCH
2. GUIDE PLATE
3. STRIKER SPIGOT
4. CUP
5. SPRING
6. WASHER
7. NUT
8. KNOB AND WIRE
9. BODY AND TUBE
10. BUSH
11. PIN
12. WASHER
13. NUT

AIR VENTILATOR—To remove (All models)

The most likely possible fault that can occur is to the air distribution valve.

To remove, proceed as follows:—

If a heater is fitted, drain the cooling system.

From the front of the ventilator housing, take off the water valve assembly and disconnect the heater outlet pipe. If a heater is not fitted, the locations

of these items will be sealed by grommets; in which case, do not disturb.

Disconnect the clip and remove the ventilator duct (air hose).

Remove the setscrews which retain the ventilator housing to the scuttle. While removing the housing take care not to damage the gasket.

Disconnect the air valve lever at its operating end.

Take out the screws retaining the air distribution valve assembly to the lower case, and remove the assembly.

On early cars an all-metal deflector plate was fitted.

Subsequently a furflex seal was fitted to the lower edge; however, when the improved valve assembly was fitted, a new deflector plate having a rubber seal (the appropriate length can be cut from Part No. H.110240, boot lid seal) was added.

When refitting, apply "Seelastik" to the mounting flange of the ventilator housing.

BOOT LID—To remove (Fig. 27) (Saloon and Limousine)

Disconnect the battery at the positive terminal. Open the boot lid, and from the underside, pull out the number plate lamp wire from its snap connector which is located by the left-hand hinge.

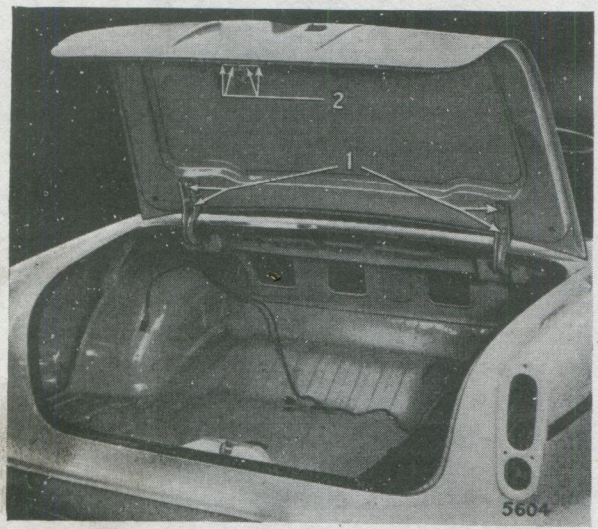

Fig. 27. *Boot lid attachment points*

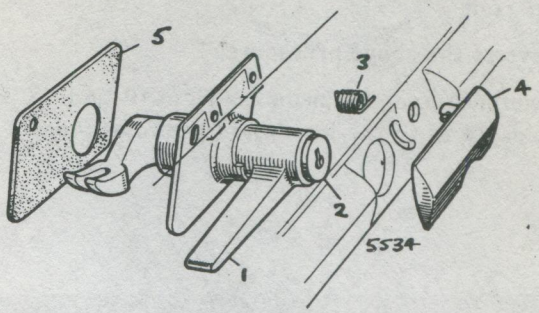

Fig. 28. *Components of boot lid lock*

1. HANDLE
2. LOCK
3. SPRING, COVER PLATE
4. COVER PLATE
5. SEAL

Support the lid with a suitable sling and remove the two setscrews and washers (1) from each hinge and take off the boot lid.

Reverse these instructions when refitting.

BOOT LID LOCK—To remove (Saloon and Limousine)

With the lid in the raised position, and working from the inside of the lid, disconnect the lock operating lever at its upper end.

Remove four screws with their washers (2), (Fig. 27) and ease the lock from its mounting, taking care not to damage the operating lever.

To refit

Reverse the above procedure.

TAIL-GATE LOCK—To remove (Estate Car)

With the window in the raised position, remove the four securing screws with their washers from the upper edge of the tail-gate.

To remove outside handle, take out the four screws from the rear of the window frame which are exposed to view after easing down the weather-strip.

FRONT GRILLE ASSEMBLY—To remove (All models)

From the engine side of the grille, remove the three retaining screws from each end.

To remove the grille surround, take out the screws from the exterior of the surround, and the nuts from the ends. These nuts are accessible from under the wing.

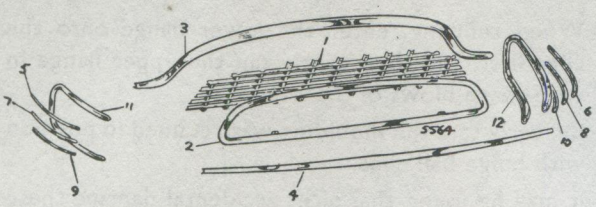

Fig. 29. *Front grille assembly (Series I)*

1. RADIATOR GRILLE
2. GRILLE FRAME
3. UPPER SURROUND
4. LOWER SURROUND
5. EXTENSION BEAD O/S TOP
6. EXTENSION BEAD N/S TOP
7. EXTENSION BEAD O/S CENTRE
8. EXTENSION BEAD N/S CENTRE
9. EXTENSION BEAD O/S LOWER
10. EXTENSION BEAD N/S LOWER
11. SURROUND O/S
12. SURROUND N/S

The extension beads are retained in position with screws and nuts, which are accessible from below the front wing.

If reference is made to Fig. 30 it will be seen that the removal procedure for Series III grilles is similar to that given for other models.

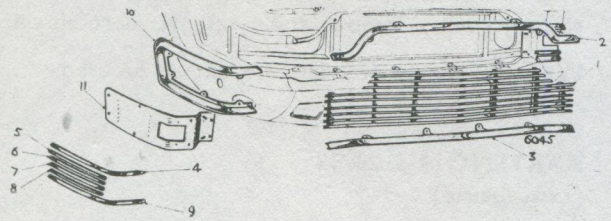

Fig. 30. *Front grille assembly (Series III)*

1. RADIATOR GRILLE
2. UPPER SURROUND
3. LOWER SURROUND
4. GRILLE BAR
5. GRILLE BAR
6. GRILLE BAR
7. GRILLE BAR
8. GRILLE BAR
9. GRILLE BAR
10. SIDE GRILLE SURROUND
11. MOUNTING PANEL

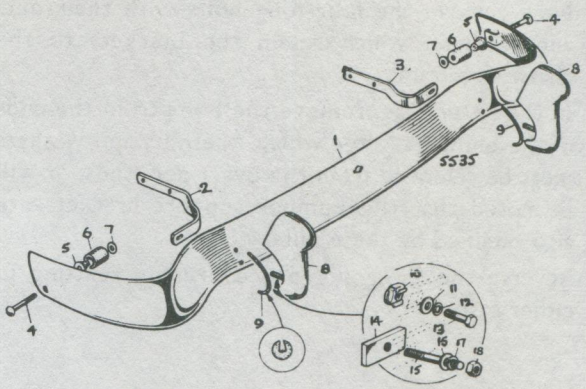

Fig. 31. *Components of front bumper*

1. BUMPER BLADE
2. BRACKET, O/S
3. BRACKET, N/S
4. BOLT
5. WASHER, COMPRESSION
6. BUFFER
7. WASHER
8. OVERRIDER
9. SEAL
10. GRIP-NUT
11. WASHER, PLAIN
12. WASHER, SPRING
13. BOLT
14. TAPPED PLATE
15. STUD
16. WASHER, PLAIN
17. WASHER, SPRING
18. NUT

FRONT AND REAR BUMPERS—To remove (All models)

The bumpers can either be removed complete with their mounting brackets, or without.

In the first instance, remove two (one each side) bolts with their nuts and washers from the ends of the bumpers, noting the rubber buffers.

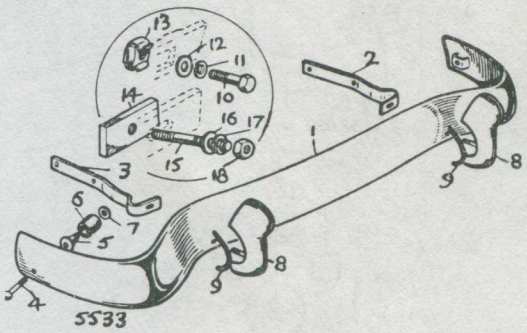

Fig. 32. *Components of rear bumper*

1. BUMPER BLADE
2. BRACKET, O/S
3. BRACKET, N/S
4. BOLT
5. WASHER, COMPRESSION
6. BUFFER
7. WASHER, PLAIN
8. OVERRIDER
9. SEAL
10. BOLT
11. WASHER, SPRING
12. WASHER, PLAIN
13. GRIP-NUT
14. TAPPED PLATE
15. STUD
16. WASHER, PLAIN
17. WASHER, SPRING
18. NUT

Now remove the four long bolts with their nuts and washers, which retain the brackets to the chassis sub-frame.

In the latter case, remove the bolts from the ends of the bumpers, after which, the nuts and washers must be removed from the overrider studs. It will be noted that the bumper support brackets are also retained by these nuts.

Reverse the foregoing procedure for refitting in either case.

BODY MOULDINGS—To remove

(All models)

The mouldings are retained in position by clips along their entire length.

Ease the upper flange of the moulding from its clips and simply pull away.

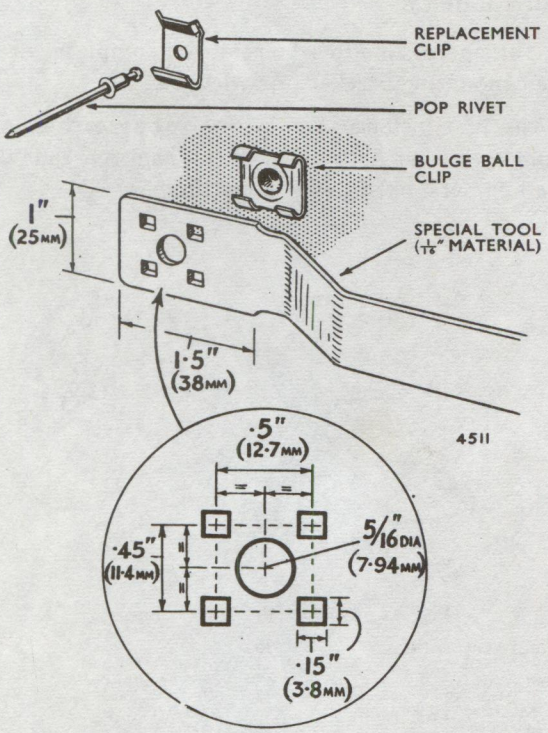

Fig. 33. *Dimensions of special tool*

When refitting, enter the lower flange onto the clips first, and then gently tap the upper flange in with sharp blows of the hand.

On early cars the moulding was retained in position with bulge ball clips.

It may be found that after accidental damage these clips will have to be removed before repairs can be carried out.

Owing to the method and construction used to secure the bulge ball clips, a special tool is required to prevent the clip from revolving while it is being removed.

The tool (Fig. 33) is placed over the tops of the clip while it is drilled out of the damaged panel.

The replacement clip (Part No. H.115790) is secured to the panel by means of a pop-rivet (Part No. 9143252) adjacent to the position of the original clip.

NAME BADGES—To remove

(All models)

Nuts and spring washers are used in the retention of the name plaque on the bonnet.

The name "Humber" on the boot lid, and on the bonnet of later models, is retained by spire nuts; so too, are the mascots on the bonnet and boot lids.

If it is necessary to remove the badges for any reason, simply remove their respective retainers.

When refitting new spire nuts should be used.

PARTITION GLASS

(Limousine)

To remove partition glass (Fig. 34)

Remove the front seat cushion (see page 10) and the seat squab (page 17). Remove the centre armrest complete with its side links if fitted.

Raise the partition glass to its uppermost position. From each side of the seat squab frame, remove both the lower glass side channels (two screws on each).

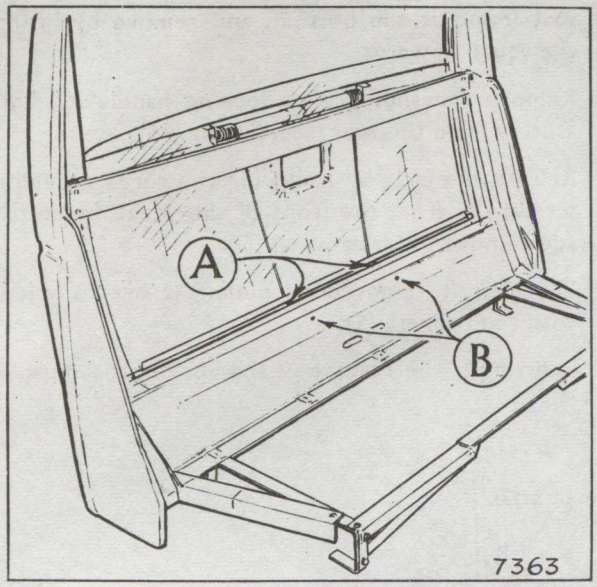

Fig. 34. *Seat frame showing cord locating pegs (A) and armrest retaining holes (B)*

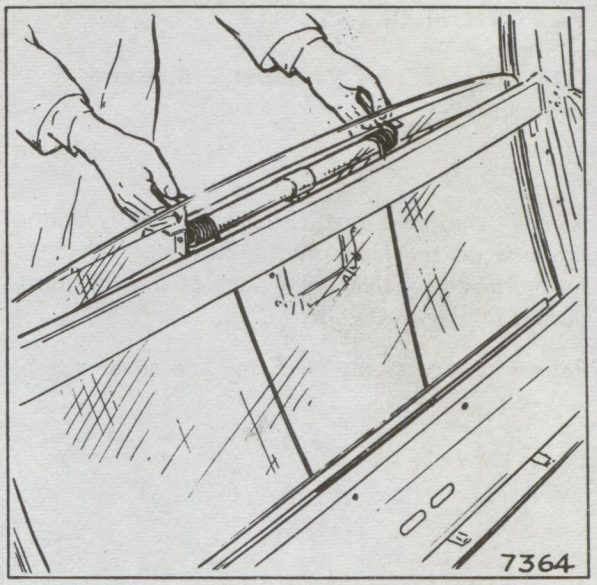

Fig. 35. *Re-setting spring barrel tension*

It should be noted that when ordering side channels they will be supplied as one piece for each side, but on production, these are cut in half (making four channels in all) for ease of assembly and removal.

Lower the glass and release cord (or Bowden cable) from its locating pegs (A) on the glass camplate, and hook the cord around two slave screws which are temporarily fitted into the lower holes (B) of the centre armrest side link locations. If the cord is not hooked around these slave screws, the tension of the spring barrel will be lost and will, therefore, have to be re-set.

On cars which do not have a centre armrest on the front seat squab it is still possible to use the holes (B) to retain the cord tension because the seat frame is common to all models.

Pull out glass by grasping its lower edge and pulling forwards and downwards.

To re-set spring barrel tension (Fig. 35)

With the partition glass in its location in the seat squab frame and all glass channels fitted, the cord around the pegs on the glass camplate, tension the spring barrel in the following manner.

Working from the rear of the seat squab frame, it will be found on inspection that the spring barrel assembly has a ratchet on the right-hand end, and a squared-locking nut on the left-hand end. With a suitable spanner, hold the nut on the left-hand end to prevent the barrel from turning, and with the aid of a "C" spanner, adjust the ratchet on the right-hand end of the barrel until the glass can be balanced in any position, without falling to the bottom of the frame under its own weight.

Replace the rubber brake assembly (see page 17), the brake locking lever, and the top capping on completion of all adjustments. There is no necessity to remove the seat assembly from the car for any of the operations on the partition glass.

PARTITION GLASS

(Limousine Series V, Super Snipe and Imperial)

To remove

Remove the front seat cushion by simply pulling upwards on the front of the cushion. When re-fitting, make sure the rear edge of the cushion is pushed fully home.

Release the two bolts securing the squab to the seat frame at the bottom, and remove by lifting the squab upwards.

Remove the sliding glass locking handle (C) and ashtray from the rear facia (D, Fig. 36).

Release the facia by removing the three retaining screws (A) from the front of the squab frame (B) and remove the facia panel (D).

The glass is removed by pulling it out complete with the runners (E).

Refitting is the reverse of the above procedure.

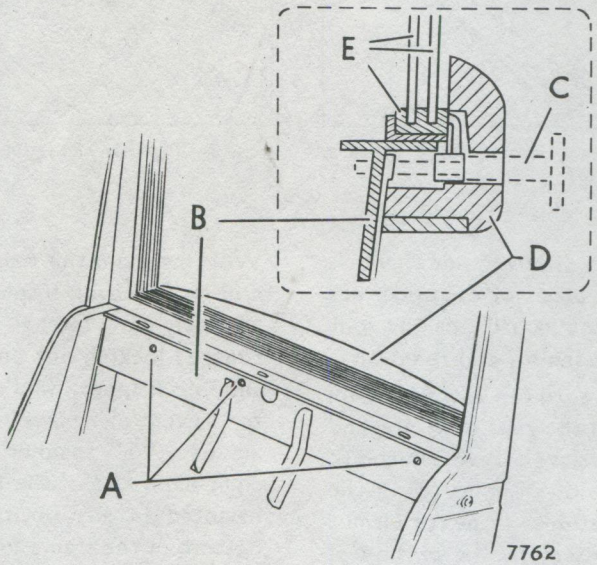

Fig. 36. *View of glass fitment*

EXTERIOR ROOF COVERING

(Imperial only)

Clean by occasionally wiping over with Rootes P.V.C. cleaner, Part No. 5240134. Instructions for use will be found on the container.

If this is not available, a mild general-purpose liquid detergent may be used, but may not be so effective as a cleaner. Nothing is to be gained by wax polishing the P.V.C. roof covering.

"SELECTAVIEW" WING MIRROR

(Series V. Estate cars only)

To remove

Withdraw the two screws retaining the operating lever assembly to the facia mounting bracket.

Disconnect the three nipples from the operating plate in the lever assembly.

It will be necessary to open up the slots (starred in Fig. 37), in order to release the cables. Take great care not to break off the lugs during this process.

Open the bonnet and remove the large diameter heater intake pipe clipped to the offside front wing.

Remove the insulation pad inside the offside front wing.

Pull the mirror operating cables through the grommet in the bulkhead.

Remove the setscrew and shakeproof washer retaining the mirror assembly to the wing, and withdraw the mirror assembly and cables complete.

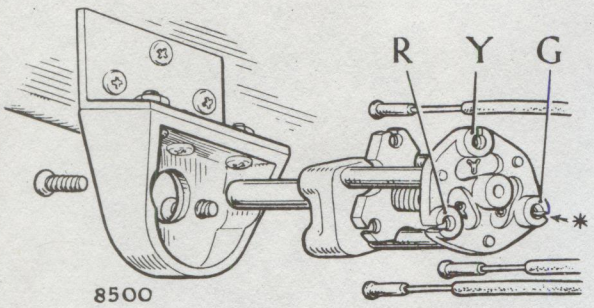

Fig. 37.

To refit

Feed the cables through the rear of the two holes in the wing. This hole must be fitted with a rubber grommet.

Position the mirror assembly on the wing, fit the setscrew and shakeproof washer and tighten.

Feed the cables through the grommet in the bulkhead.

Couple up the cables to the operating lever, making sure to match the colour of the cables to the markings on the plate, i.e. R=Red, Y=Yellow, G=Green.

When the cables are fully located, gently squeeze up the retaining lugs with pliers, to retain the outer cables in position.

Check the operation of the mirror.

Fit the operating lever assembly to the mounting bracket on the facia by means of the two screws.

Should it become necessary to remove the mounting bracket from the facia, it is attached to a stiffener bracket by three setscrews, nuts and shakeproof washers. The stiffener bracket is fastened to the back of the facia by three screws.

Refit the insulation pad and heater intake pipe.

RECOMMENDED LUBRICANTS

SECTION P

CONTENTS

Page

LIST OF RECOMMENDED LUBRICANTS ... ... 2—3

RECOMMENDED LUBRICANTS

ENGINE (See footnote on page 3)

Where prevailing climatic temperature is: —

SUMP (OIL PAN)	Above 21°C (70°F)	Shell Super Motor Oil or Sheell X–100 30
	27°C to –7°C (80°F to 20°F)	Shell Super Motor Oil or Shell X–100 20W
	0°C to –18°C (32°F to 0°F)	Shell Super Motor Oil or Shell X–100 10W
	Below –15°C (5°F)	Shell X–100 Multigrade 5W/20

Upper Cylinder Lubricant ... ... Shell Upper Cylinder Lubricant

AIR CLEANER AND SILENCER (Oil bath type) ... ... Engine Oil

DISTRIBUTOR

Shaft and Cam bearing. Contact breaker pivot. Automatic timing (Spark) control ... ... Engine Oil

Cam Profile and shaft greaser ... ... Shell Retinax A

GENERATOR (except Alternator) ... ... Engine Oil

BATTERY TERMINALS ... ... Silicone Grease

STEERING UNIT ... ... Shell Spirax 90 E.P.

FRONT SUSPENSION

King Pins, Idler Pivot, Steering Joints and front suspension links ... ... Shell Spirax 140 E.P. or Retinax A

GEAR SHIFT LINKAGE AND SELECTOR CABLE ... ... Engine Oil

ACCELERATOR CONTROL LINKAGE ... ... Engine Oil

GEARBOX

(and overdrive, if fitted) All temperatures ... ... Shell Super Motor Oil

AUTOMATIC TRANSMISSION (if fitted) ... ... Shell Donax T.6

PROPELLER SHAFT

Needle Roller Bearings (prior to chassis numbers B.84300001 Imperial, and B.84000001 Super Snipe) and Splines	Shell Spirax 140 E.P. or Retinax A
Centre bearing	Pre-packed; no attention required in service

REAR AXLE

Above, minus 23°C (minus 10°F)	Shell Spirax 90 E.P. or H.D.90 *
Below, minus 23°C (minus 10°F)	Shell Spirax 80 E.P.

**Shell Spirax H.D.90 must be used at the 500 mile service and whenever replacement parts have been fitted to a differential*

POWER ASSISTED STEERING	Shell Donax T.6
FRONT WHEEL HUB BEARINGS	Shell Retinax A
REAR WHEEL HUB BEARINGS	No attention required

HANDBRAKE

Cable (prior to chassis numbers B.84300001 Imperial, and B.84000001 Super Snipe)	Shell Spirax 140 E.P. or Retinax A
Linkage	Engine Oil
BRAKE AND CLUTCH PEDAL PIVOTS	Engine Oil
BRAKE AND CLUTCH MASTER CYLINDERS	Girling Fluid, S.A.E. Spec. 70R.3
SHOCK ABSORBERS	No attention

BODY

Hinges, Locks, Catches	Shell Spirax 90 E.P.

Important

There is no need to use additives with any of the specified lubricants as those additives considered necessary have already been included during blending. It should be specially noted that, under no circumstances, should additives of any kind be used in the gearbox, overdrive or automatic transmission.

2. For continuous high speed driving use Shell Super Motor Oil, or Shell X–100 40 if multigrade oil is not available. This is particularly important during hot weather.

OIL SEALS AND TAPER-ROLLER BEARINGS

CONTENTS

(3 Pages)

OIL SEALS Page

—Leather seals impregnated with wax 2

—Synthetic rubber seals 2

TAPER ROLLER BEARINGS

—Cups 3

—Roller assemblies 3

—Cones on stationary shafts 3

—Cones on revolving shafts 3

OIL SEALS

1. Before fitting, carefully examine the seal and remove all traces of dirt or grit. This should be done by wiping carefully with a cloth moistened with clean oil.

2. **Leather Seals Impregnated with Wax.** These seals should **not** be soaked in oil prior to fitting as their initial lubrication is provided for during manufacture. Smear the sealing lips with clean grease.

3. **Synthetic Rubber Oil Seals.** These require no preliminary soaking in oil, it being necessary only to smear the sealing lips with clean grease. It is most important when fitting to see that the sealing lip is not damaged, even by the slightest scratch and that the garter spring is correctly located when in position. The seal must be properly pressed home in the housing recess, **with the lip and garter spring side to face the oil.**

4. Examine the shaft and remove all roughness, burrs on the edges of keyways, screw threads, splines, shoulders, etc., over which the sealing lip is passed. In some cases, where the profile of a shaft over which a seal must pass during fitting is liable to cut the sealing lip, it is good practice to use a fitting sleeve with a lead-on taper and a diameter a few thousandths of an inch greater than the shaft. Where necessary a sheet of shim steel, copper or paper, well greased, should be wrapped around the shaft to cover such sharp edges as might damage the seal.

5. In most cases it will be necessary to press the seal into the housing first and subsequently enter the shaft. In all cases it must be stressed that as far as possible the sealing lips should be observed during fitting to **ensure that the garter spring does not become displaced** during the process. When passing the seal along the shaft, or entering the shaft in the seal, as the case may be, a slight rotary motion will assist the operation. Grease should be applied to the shaft.

6. Do not allow the assembly to rest for any length of time in an incomplete stage of fitting where it might cause the weight of the shaft or housing to be borne by the seal, resulting in damage or distortion to the latter.

7. Before pressing the seal into the housing the **outside** diameter should be lightly coated with a liquid jointing compound.

8. When pressing a **metal cased** seal into the housing, a firm uniform pressure should be exerted, preferably by means of an arbor press in combination with a suitable tool for a ram. The diameter of the tool should be slightly less than the outside diameter of the seal, e.g. ·005″—·015″ (·13—·38 mm.) smaller. Only if an arbor press or fitting tool is not available may the following method be adopted. By means of gentle hammer blows applied to an intermediate metal ring, disc or tube of slightly smaller diameter than that of the seal (i.e. ·005″—·015″ smaller), or other protective piece, drive the seal into place. Care should be taken to apply blows uniformly around the **outside edge** of the seal face, and in no circumstances should the hammer be applied direct to the seal casing. Great care must be taken to see that the seal does not enter the recess in a tilted position.

> **Note:** When pressing metal cased seals into position note that one of the three oil entry holes in the metal face adjacent to the oil must be *upwards* or at "12 o'clock" position so that a small quantity of oil is always retained in the bottom of the metal casing between the other two holes.

9. When pressing in a synthetic rubber type seal (without metal casing), great care is necessary. The leading edge of the recess into which it fits in the housing should be slightly chamfered in order

to provide a lead, and the circumference of the seal should also be smeared with oil or grease to avoid cutting its outside diameter during fitting. This type of seal should only be inserted by means of a specially formed tool which is arranged to bear on the flat face of the seal.

Remember that the efficiency of the unit is dependent on the efficiency of the Oil Seal. Therefore treat the latter with care.

TAPER-ROLLER BEARINGS

The bearing assembly consists of two parts, the outer race or cup, and the roller assembly, i.e. roller secured in a cage on the cone or inner race. Usually the cone and roller assembly cannot be separated.

The cups fit in the housing.

The cones fit on the shaft.

1. Cups

(*a*) The cups should be an interference fit in their housings. If not, the housings should be replaced.

In no case must knurling, or the application of solder, or the use of liners other than pressed in steel, be resorted to.

(*b*) The cups must not be "cocked" when being pressed in, i.e. they must be in line with the bore in the housing throughout the operation of installation.

(*c*) The cups must be pressed right home against the abutment shoulder, preferably under a press. It should not be possible to enter a ·002" thickness gauge between the cup and abutment shoulder.

In fitting, use a tool which contacts all round the outer edge. On no account must pressure be applied to the roller track.

(*d*) Grease the seating for the cup, which should be assembled clean and smeared with lubricant after installation.

2. Roller Assemblies

Before placing in position, all old grease must be scrupulously cleaned out and the cages packed between the rollers with new lubricant of the correct grade.

The whole of the roller surfaces should likewise be covered with lubricant.

3. Cones on Stationary Shafts (Stub axles and the like).

(*a*) The cones must be a "creep" fit on the shaft, the ideal being ·0002"/·0013" (·005/·033 mm.) loose. This permits of easy removal and proper control of adjustment, and allows the cone to alter its axial position slightly when the load is eased momentarily. The seatings for inner race must always be smeared with grease before the bearings are fitted.

(*b*) Hub bearings should be adjusted in the manner described in section F of this manual.

When the correct adjustment has been obtained, lock the nut with a new split pin of correct diameter.

4. Cones on Revolving Shafts (e.g. Pinion Shafts).

The cones should be a press fit, but in some cases where bearing adjustment is made by moving one of the cones, it is not practicable to be more than a light push fit. If cones are loose enough to turn on the rotating shaft, overheating and rapid wear of seating will occur.

HEATING AND VENTILATION

SECTION R

CONTENTS

Page

BLOWER

—To remove and refit 4

FRONT HEATER (Saloon and Estate Car)

—**General Description** (*Series I—III*) 4

(*Series IV onwards*) 5

—To remove and refit (*Series I—III*) 4

(*Series IV onwards*) 6

Thermostatic Control

—Description 5

—To remove and refit 6

Heater Air Filter 6

REAR HEATER (Touring Limousine)

—**General Description** 7

—To remove and refit 7

—To bleed the heater 7

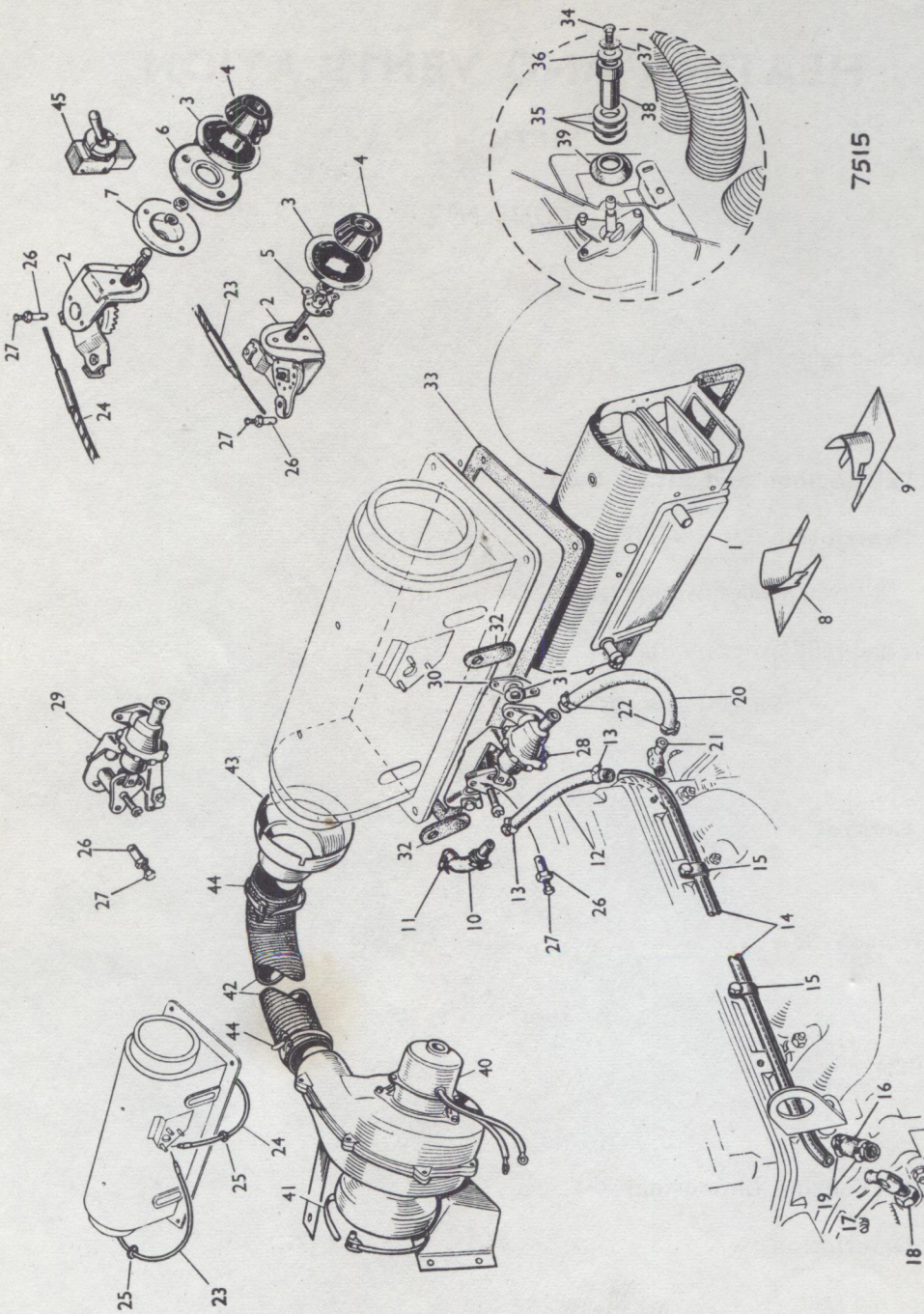

Fig. 1. *Heater, Series I—III*

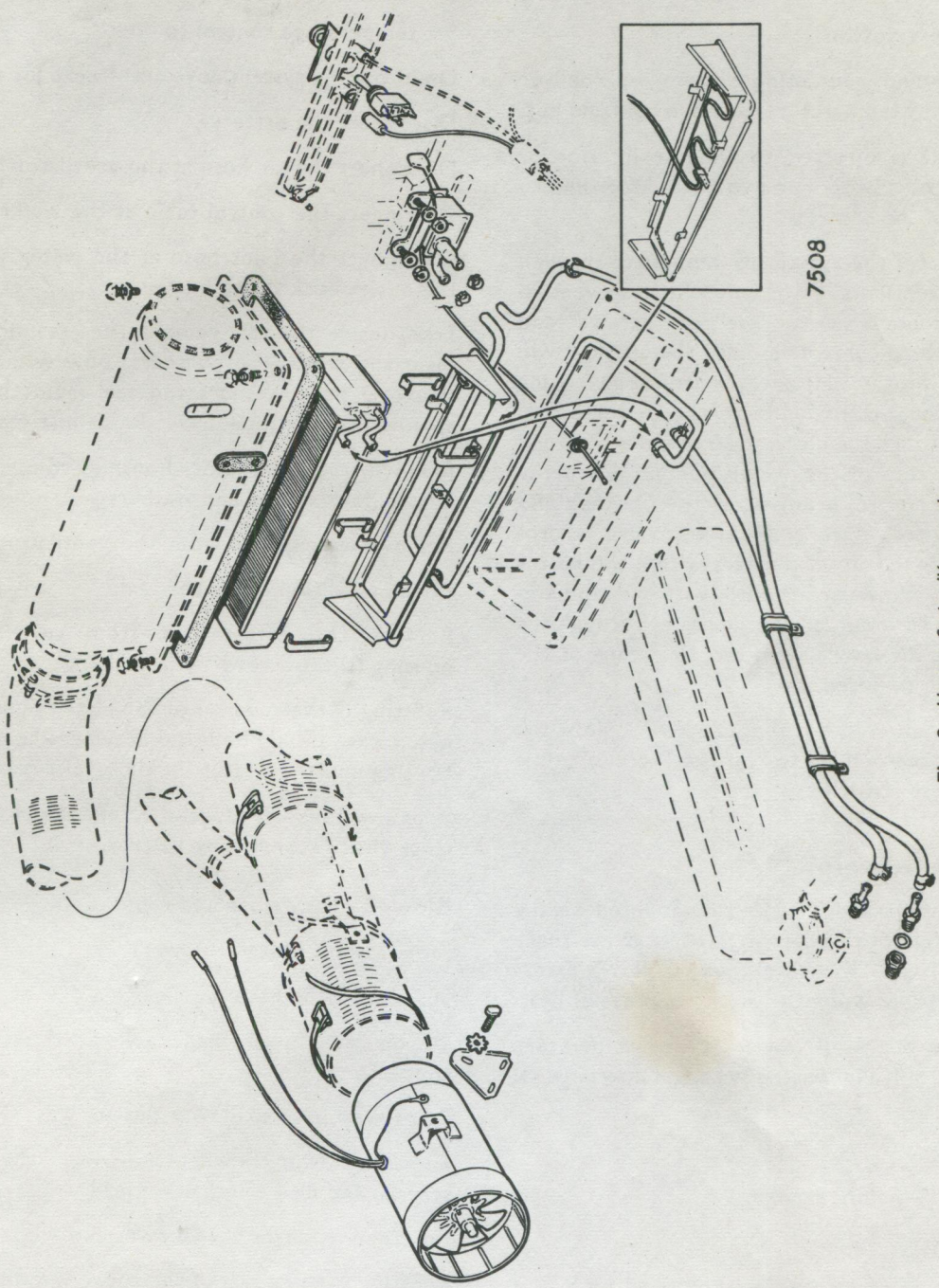

Fig. 2. *Heater, Series IV onwards*

HEATER—*Series I–III*

General Description

The heating and ventilating system will deliver fresh air, at any temperature between cold and hot.

The fresh air is directed to the car interior or windscreen; or a proportion to both, according to the setting of the controls.

Fresh air enters the system by ram-effect through the blower-ventilator air hose. With the ventilation (AIR) control set to "car" or "screen" and the temperature control at "off" the air flow will by-pass the heater. Hot water from the engine cooling system, controlled by the water valve, circulates through the heater matrix and is returned to the inlet side of the water pump. When the temperature control is moved away from the "off" position towards "hot", the water valve is progressively opened and flap valves within the heater will mix cold and warm air until, with the temperature control at "hot", all the air passes through the heater. The air flow is boosted by means of the blower when required.

Heater output will not be effective unless the ventilation control is set to "car" or "screen"; or is between these positions.

Temperature Control

This control, marked "TEMP", is mounted on the right-hand side of the lighting switch, it has three positions; "HOT", "WARM" and "COLD". Intermediate positions will give varying degrees of heat.

Note: From Series III onwards the temperature control is illuminated with the instruments.

Blower

Series I and II—Rotary Blower

Series III onwards—Axial Fan

The blower, or fan motor, is controlled by a facia mounted switch. Its use increases the volume of air supplied to the heating and ventilating system.

HEATER—To remove and refit (*Series I–III*)

Set temperature control to "hot".

Drain cooling system, save anti-freeze for re-use.

Disconnect the battery.

Disconnect the air hose at the ventilator housing.

Disconnect the control cable at the water valve.

Disconnect the inlet hose at the water valve and the outlet hose at the heater.

From inside the car, remove the retaining screw, plain and shakeproof washers; now withdraw the sleeve, 3 plain washers and seal from the heater spindle (located just above the demist elbows).

Remove the ventilator housing complete with heater (four screws and washers).

Remove water valve from the ventilator housing.

Check condition of rubber seal.

Remove the heater unit from the ventilator housing (three screws with washers).

Refitting is the reversal of the above operations, a new gasket should be fitted between the ventilator housing and the heater bulkhead platform.

Renew water valve seal and do not forget to restart clock after reconnecting battery.

Blower—To remove and refit

Series I and II (Rotary Blower)

Disconnect the battery.

Disconnect blower feed cable at the snap tube connector.

Release air hose at blower outlet.

Release blower bracket at wing valance (four screws) and disconnect earth lead.

Release inlet air hose at blower and withdraw unit.

Refitting is a reversal of the above instructions, do not omit to re-start the clock after re-connecting the battery.

Series III onwards (Axial Fan)

Disconnect battery.

Disconnect fan feed cable at snap connector.

Release branch pipe bracket (two screws).

Release front air hose clip and remove front air hose.

Release fan bracket (two screws—one retains the earth wire) and remove the fan assembly.

Refitting is a reversal of the above operations, do not forget to re-start the clock after re-connecting the battery.

Note: On Series V the fan has two-speed control.

Switch operating positions:—

Up	...	Slow
Centre	...	Off
Down	...	Fast

Connections:—

Upper terminal	...	Green-yellow cable
Centre terminal	...	Green cable
Lower terminal	...	Green-brown cable

Blower connections:—

Connect each blower lead to the appropriate coloured cable in the harness.

Connect the black lead to earth.

HEATER—*Series IV onwards*

General Description

The improved heater system introduced at Series IV included a thermostatic temperature control. The air-flow and axial fan are similar to that described for Series III, except that heater flap valves are eliminated.

When the air distribution control is set fully to the "SCREEN", a small proportion of air will still be directed into the footwell area of the car.

Thermostatic Temperature Control

When the control lever is set at "cold" the water valve is closed and the hot water, from the engine cooling system, is prevented from circulating through the water. Movement of the control lever towards the "hot" position will open the water valve, allowing hot water to enter the heater and warmed air will be available.

A temperature sensitive element is incorporated in the control, the purpose of which is to automatically regulate the flow of hot water, in order to maintain a reasonably constant air temperature according to the setting of the control lever.

The element senses temperature changes by means of a capillary tube, the last 15 in. (38 cm.) of which is located in the heater output airstream. Thus for a given setting of the control, a rise in air temperature around the tube will cause the water valve to close slightly, and a fall in output air temperature will cause the water valve to open wider.

The central range of the control lever movement thus offers a wide range of thermostatically controlled temperatures. At one end of the lever travel there is a "cold" position (water valve closed), at the opposite end a "hot" position (water valve fully open), for quick warming up; both of which over-ride the thermostatic control.

This valve assembly has been subjected to exhaustive tests and has been found to be extremely reliable.

In the event of heater mal-function the following checks should be made:—

1. Check water circulation through heater and eliminate any air locks.
2. Check engine thermostat.
3. Check the function of the air distribution valve (See Section O).
4. If 1 to 3 above are in order and the temperature control is suspect, a replacement should be fitted.

Thermostatic Temperature Control—

To remove and refit

Carry out the operations detailed under "Heater—To remove and refit".

Having removed the matrix, proceed as follows:—

Release the control (2 nuts and washers behind facia) and, with assistance, carefully withdraw the hoses and sensing tube into the car interior. Now remove the control.

Refitting is a reversal of the above instructions, care must be taken not to kink the sensing tube and also to avoid sharp bends.

HEATER AIR FILTER

A filter mesh is fitted at the inlet end of the branch pipe. Another filter of finer mesh is fitted at the ventilator housing air inlet (see Section "O").

Blockage of either filter will result in reduced efficiency of the heating and ventilating system.

AIR FILTER—To clean

Disconnect the small air house (facia vent) at the branch pipe.

Remove the air hose fitted between the branch pipe and the ventilator housing.

Release the blower hose at the branch pipe end. Remove branch pipe (two fixings).

Remove filter (2 screws), clean by washing in paraffin or petrol and dry by means of compressed air. The filter fitted at the ventilator housing may be cleaned in a similar manner.

Refitting is a reversal of the above operations.

HEATER—To remove and refit (*Series IV onwards*)

Set temperature control to "Hot".

Drain cooling system—save anti-freeze if used.

Disconnect the battery.

Disconnect air hose at ventilator housing.

Disconnect water hoses at heater inlet and outlet pipes.

Remove ventilator housing (four screws).

Unclip matrix and remove from platform.

Refitting is a reversal of the above instructions.

Care must be exercised when refitting the heater that the "sensing tube" is not displaced. It should not contact the matrix. Avoid sharp bends and kinking.

Re-start clock after re-connecting battery.

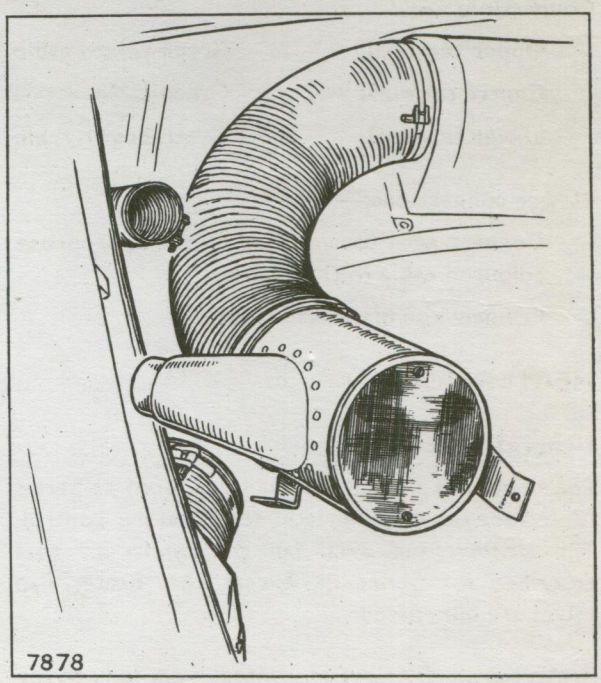

Fig. 3. *Branch pipe air filter*

REAR HEATER

(Touring Limousine—Series I onwards)

General Description (See Fig. 4)

A single rear compartment heater is fitted under the left-hand front seat. A supplementary heater may be added on the right-hand side if required.

The rear heater, like the front heater, uses hot water from the engine cooling system. The heater element is mounted on the car floor below the front compartment seat. Special insulated hoses are used for this installation.

Heating is normally controlled by means of the rheostat fitted on the division, this varies the speed of the fan. During summer the hot water may be turned off at the water valve mounted on the bulkhead.

Rear heater—To remove and refit

Set the front heater control to "hot", open the rear heater water valve (if closed) and drain the cooling system. Save anti-freeze if used.

Disconnect the battery.

Remove the front seat cushion and adjust the division fully to the rear.

Turn back the floor covering at the heater. Disconnect the motor cable at the snap tube connector.

Underneath the car, disconnect the insulated hose at each elbow.

Remove the heater plastic cover.

Remove the six self-tapping screws securing the heater to the car floor, disconnect the earth wire and withdraw the heater unit.

Refitting is a reversal of the above operations. Do not forget to re-start the clock after reconnecting the battery. It may also be necessary to bleed the heater after refilling the cooling system. (See "To bleed the heater").

To bleed the rear heater

Start the engine and warm up to the normal operating temperature.

With the engine idling release the rear heater return hose clip at the T-piece in the front heater return hose and dispel air.

Reconnect the hose and top up the cooling system —use diluted anti-freeze as appropriate. (See also "General Data" and Section "A").

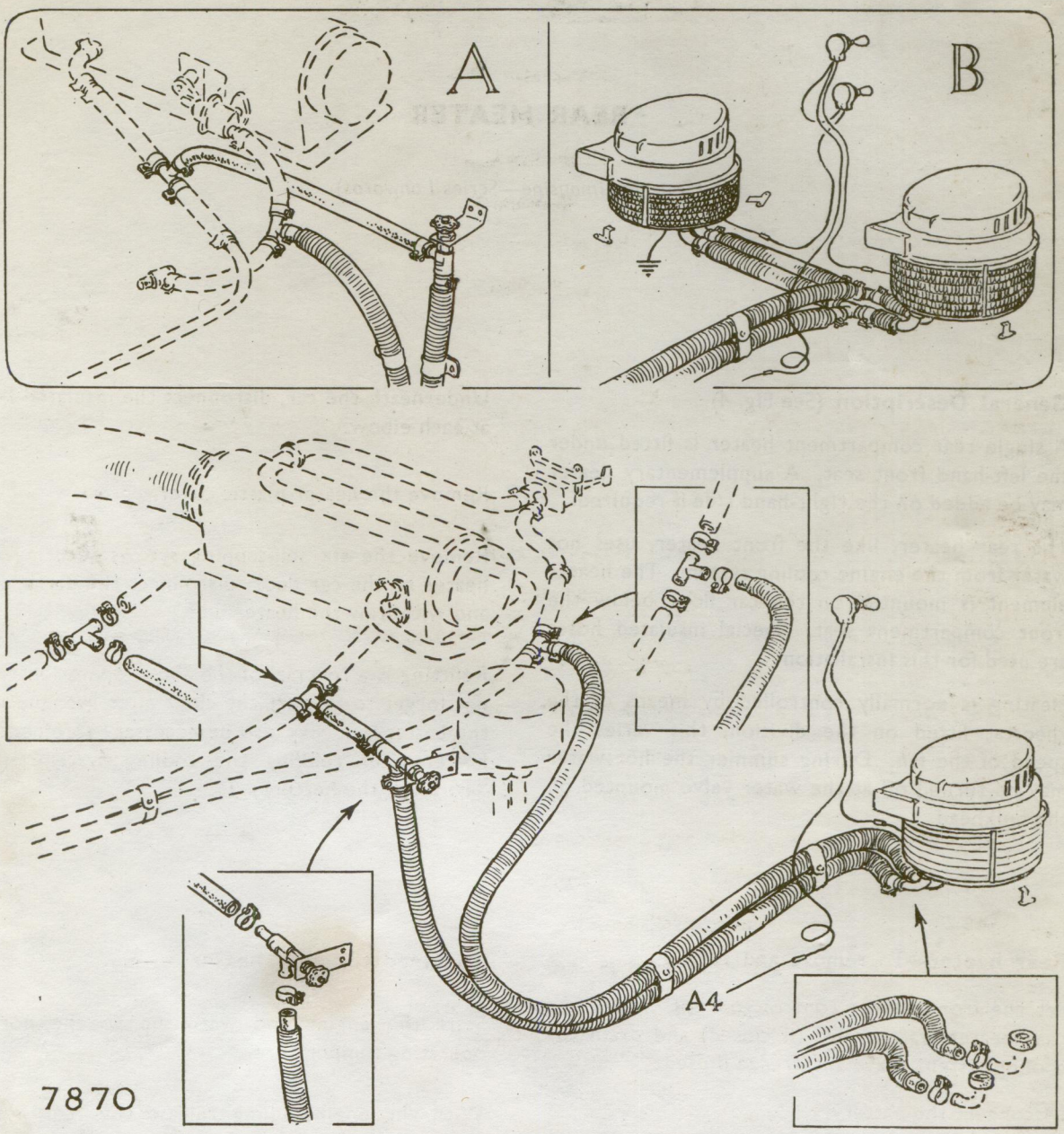

Fig. 4. *Rear heating—General arrangement (Series IV onwards)*
Inset "A" (Series I—III). Inset "B" (Supplementary heater)

SPECIAL TOOLS

Obtainable from:

V. L. CHURCHILL & CO. LTD.

London Road

Daventry

Northamptonshire

England

Always look at the sub-section "General Tools" in addition to the sub-section in which you are interested

Engine

RG.209	... ...	Camshaft sprocket remover
RG.274C	...	Cylinder head bolt wrench
RG.336–3	...	Connecting rod arbor adaptor. Use with connecting rod alignment jig 335 and master arbor 336
RG.478	... ...	Valve guide remover/replacer
RG.6513A	...	Valve spring compressor
RG.6513A–2	...	Valve spring compressor adaptor. Use with RG.6513A
38/U3	... ...	Piston ring compressor
316X	... ...	Valve seat cutter handle
316–11	... ...	Valve seat pilot
317–25	... ...	Valve seat cutter, exhaust
317G–25	...	Valve seat cutter (glaze breaker)
317–30	... ...	Valve seat cutter, inlet

Gearbox

RG.62	... ...	Selector shaft loading adaptor
RG.69	... ...	Reverse stop rod circlip remover/replacer

Rear Axle

RG.16A	... ...	Axle shaft remover—main tool
RG.16A–2	...	Adaptor
RG.329	... ...	Differential assembly jig
RG.329–2	...	Differential jig adaptor
RG.330A	...	Axle shaft bearing remover
RG.421	... ...	Universal flange holding wrench
RG.448	... ...	Bevel pinion front bearing cup remover/replacer, use with 550 (Series IV and V)
RG.449	... ...	Bevel pinion rear bearing cup remover/replacer, use with 550 (Series IV and V)
RG.4221B	...	Hand press assembly—main tool
RG.4221B–2A	...	Adaptor set—Differential bearing removal
RG.4221B–8	...	Adaptor set—Pinion rear bearing removal and replacement
RG.4221B–30	...	Differential jig adaptor

Steering and Suspension

RG.50D	... ...	Front coil spring compressor—main tool
RG.50D–2	...	Adaptor
RG.132	... ...	Drop arm remover
RG.226	... ...	Swivel pin bush remover/replacer
RG.296A	...	Upper and lower fulcrum pin bush remover and replacer
RG.296A–2	...	Upper and lower fulcrum pin bush remover and replacer adaptor
RG.401	... ...	Static laden gap gauge, front pair for Series I, II and Early III
RG.406	... ...	Static laden gap gauge, front pair for Late III, IV and V
RG.270	... ...	Ball cup spanner
RG.271	... ...	Bearing spanner
RG.272	... ...	Gland seal replacer
RG.276	... ...	Pressure check gauge adaptor. Use with L.188 (overdrive test equipment)
RG.309	... ...	Piston oil seal—Installing sleeve

Overdrive

L.176A	Drive shaft oil seal remover
L.177A	Drive shaft oil seal replacer, cone clutch and spring thrust housing dismantling tool. Use with 550 handle
L.178	Uni-directional clutch assembly ring
L.182	Accumulator piston housing remover ($1\frac{1}{8}$ in. piston)
L.182–1	Adaptor ($1\frac{1}{2}$ in. piston)
L.183A	Pump barrel remover—Main tool
L.183A–1 ...	Adaptor for L.183A
L.184	Pump barrel replacer
L.186	Tailshaft rear bearing replacer
L.187	Annulus and tail shaft bearing remover and replacer (used with RG.4221B, Hand Press)
L.188	Hydraulic test equipment
L.190A	Tail shaft end float gauge

General Tools

RG.387	Torque wrench	6— 40 lbs/ft.
No. 12	Torque wrench	20—100 lbs/ft.
No. 13	Torque wrench	50—170 lbs/ft.
No. 4	Torque wrench	150—400 lbs/ft.
550	Driver handle—Main tool	
7066	Two-way circlip pliers, c/w three pairs of points	
7657	Oil seal remover—Main tool	

Torque wrenches in daily use use should be checked at intervals, not exceeding three months, to ensure that accuracy is maintained.

Bore ring gauges are available in 3·250 in. (82·5 mm) for the Series I engines, and 3·4375 in. (87·3 mm) for Series II engines onwards and are obtainable from :—

COVENTRY GAUGE & TOOL CO. LTD.

Fletchamstead

Coventry, England

64947013 ... Girling shoe horn, obtainable from:—

GIRLING LIMITED SALES AND SERVICE
Birmingham Road
West Bromwich, Staffordshire, England

NOTE—Further supplies of some of the above Special Tools will not be available when existing stocks are used. If it is found that a tool quoted in a manual section is no longer referred to in this issue of Section S, this indicates that no further stock of this tool is available.